TM8100 mobiles
TM8200 mobiles

Service Manual

MMA-00005-05
Issue 5
November 2007

Contact Information

Tait Radio Communications
Corporate Head Office

Tait Electronics Limited
P.O. Box 1645
Christchurch
New Zealand

For the address and telephone number of regional offices, refer to the TaitWorld website:

Website: www.taitworld.com

Technical Support

For assistance with specific technical issues, contact Technical Support:

E-mail: support@taitworld.com
Website: www.taitworld.com/technical

Copyright and Trademarks

All information contained in this document is the property of Tait Electronics Limited. All rights reserved. This document may not, in whole or in part, be copied, photocopied, reproduced, translated, stored, or reduced to any electronic medium or machine-readable form, without prior written permission from Tait Electronics Limited.

The word TAIT and the TAIT logo are trademarks of Tait Electronics Limited.

All trade names referenced are the service mark, trademark or registered trademark of the respective manufacturers.

Disclaimer

There are no warranties extended or granted by this document. Tait Electronics Limited accepts no responsibility for damage arising from use of the information contained in the document or of the equipment and software it describes. It is the responsibility of the user to ensure that use of such information, equipment and software complies with the laws, rules and regulations of the applicable jurisdictions.

Enquiries and Comments

If you have any enquiries regarding this document, or any comments, suggestions and notifications of errors, please contact Technical Support.

Updates of Manual and Equipment

In the interests of improving the performance, reliability or servicing of the equipment, Tait Electronics Limited reserves the right to update the equipment or this document or both without prior notice.

Intellectual Property Rights

This product may be protected by one or more patents of Tait Electronics Limited together with their international equivalents, pending patent applications and registered trade marks: NZ338097, NZ508054, NZ508340, NZ508806, NZ508807, NZ509242, NZ509640, NZ509959, NZ510496, NZ511155, NZ511421, NZ516280/519742, NZ519118, NZ519344, NZ520650/537902, NZ522236, NZ524369, NZ524378, NZ524509, NZ524537, NZ524630, NZ530819, NZ534475, NZ534692, NZ535471, NZ536945, NZ537434, NZ546295, NZ547713, NZ521450, AU2003281447, AU2002235062, AU2004216984, AU2005207405, CA2439018, CA2554213, EU03784706.8, EU02701829.0, EU04714053.8, EU05704655.9, GB23865476, GB2386010, GB2413249, GB0516092.4, US11,232716, US10/597339, US10/520827, US10/468740, US5,745,840, US10/547653, US10/546696, US10/547964, US10/523952, US11/572700.

To Our European Customers

Tait Electronics Limited is an environmentally responsible company which supports waste minimization and material recovery. The European Union's Waste Electrical and Electronic Equipment Directive requires that this product be disposed of separately from the general waste stream when its service life is over. Please be environmentally responsible and dispose through the original supplier, your local municipal waste "separate collection" service, or contact Tait Electronics Limited.

Contents

Preface 5
Scope of Manual 5
Hardware and Software Versions 5
Associated Documentation. 6
Publication Record 7
Alert Notices 7
Abbreviations 8

Part A – Description of the Radio 11
1 Introduction. 13
2 Description 21
3 Circuit Descriptions 65

Part B – Servicing the Radio 103
4 General Information 107
5 Disassembly and Reassembly 135
6 Servicing Procedures 155
7 Power Supply Fault Finding 169
8 Interface Fault Finding 179
9 Frequency Synthesizer Fault Finding 185
10 Receiver Fault Finding 247
11 Transmitter Fault Finding (>25 W) 267
12 Transmitter Fault Finding (25 W) 341
13 CODEC and Audio Fault Finding. 399
14 Fault Finding of Control Head with Graphical Display 423
15 Fault Finding of Control Head with 1-, 2- or 3-Digit Display. 447
16 Spare Parts 455

Part C – Accessories 465
17 TMAA01-01 Line-Interface Board 469
18 TMAA01-02 RS-232 Board 489
19 TMAA01-05 and TMAA01-07 Options Extender Boards 497
20 TMAA02-02 DTMF Microphone 507
21 TMAA02-06 Support Kit for Concealed & Dynamic Microphones. . 511
22 TMAA02-07 Concealed Microphone 519
23 TMAA02-08 Keypad Microphone 521
24 TMAA03-02 Security Bracket 525
25 Installing a Remote Kit. 529
26 Installing an Enhanced Remote Kit 545
27 TMAA03-31 Control Head Interface Box 561

© Tait Electronics Limited November 2007

28 TMAA03-34 Extender Box 567
29 TMAA04-04 Crossband Linking Cable 573
30 TMAA04-05 Ignition Sense Kit 579
31 TMAA04-06 Linking and Interface Cable 581
32 TMAA10-01 Desktop Microphone 589
33 TMAA10-02 Handset 593
34 TMAA10-03 and TMAA10-06 High-Power Remote Speakers 597
35 TMAA10-04 Remote PTT Kit and TMAA10-05 Hands-Free Kit . . 599
36 TMAA10-07 Desktop Microphone 607
37 TMAA10-08 Desktop Microphone 609
38 TOPA-SV-024 Test Unit 613

© Tait Electronics Limited November 2007

Preface

Scope of Manual

This manual contains information to service technicians for carrying out level-1 and level-2 repairs of TM8100 and TM8200 radios and accessories.

Level-1 repairs entail the replacement of faulty parts and circuit boards; level-2 repairs entail the repair of circuit boards, with the exception of certain special items on the boards. The manual does not cover level-3 repairs, which entail the repair of the special items.

Hardware and Software Versions

This manual describes the following hardware and software versions.
The IPNs (internal part numbers) of the boards are listed below; the last two digits in the IPN represent the issue of the board. The board information in this manual covers all production-issue boards up to the issue listed below.

- Main board (A4 band) 25 W : 220-02074-**04**
- Main board (B1 band) 25 W : 220-01700-**14**
- Main board (B1 band) 50 W : 220-01723-**04**
- Main board (C0 band) 25 W : 220-01742-**04**
- Main board (D1 band) 25 W : 220-01717-**02**
- Main board (H5 and H6 bands) 25 W : 220-01697-**11**
- Main board (K5 band) 30/35 W : 220-02146-**06**
- Main board (G2, H5 and H7 bands) 40 W : 220-01722-**04**
- Control-head board (1-digit display) : 220-02070-**01**
- Control-head board (2-digit display) : 220-01699-**03**
- Control-head board (3-digit display) : 220-02151-**02**
- Control-head board (graphical display) : 220-01718-**01**
- Control-head board (RJ45) : 220-01720-**05**
- Programming application (TM8100) : version **3.02**
- Programming application (TM8200) : version **4.02**
- Calibration application : version **4.05**

© Tait Electronics Limited November 2007

Associated Documentation

The following associated documentation is available for this product:

Manuals

- MMA-00002-**xx** TM8100 User's Guide
- MMA-00003-**xx** TM8200 User's Guide
- MMA-00051-**xx** TM8235 User's Guide
- MMA-00028-**xx** TM8100/TM8200 Installation Guide
- MMA-00006-**xx** TM8100 Operator's Guide
- MMA-00004-**xx** TM8200 Operator's Guide

PCB Information

- MMA-00016-**xx** TM8100/TM8200 Main Board A4 25 W
- MMAB12-B1-00-814 TM8100/TM8200 Main Board B1 25 W (board IPN 220-01700-**05)**
- MMA-00031-**xx** TM8100/TM8200 Main Board B1 25 W (boards after IPN 220-01700-**05**)
- MMA-00050-**xx** TM8100/TM8200 Main Board C0 25 W
- MMA-00032-**xx** TM8100/TM8200 Main Board D1 25 W
- MMAB12-H5-00-814 TM8100/TM8200 Main Board H5/H6 25 W (board IPN 220-01697-**05)**
- MMA-00033-**xx** TM8100/TM8200 Main Board H5/H6 25 W (boards after IPN 220-01697-**05**)
- MMA-00069-**xx** TM8100/TM8200 Main Board K5 30/35 W
- MMA-00020-**xx** TM8100/TM8200 Main Board B1 50 W
- MMA-00021-**xx** TM8100/TM8200 Main Board G2/H5/H7 40 W
- MMA-00035-**xx** TM8100 Control-Head Board (2-Digit Display)
- MMA-00036-**xx** TM8100 Control-Head Board (1-Digit Display)
- MMA-00015-**xx** TM8200 Control-head Board (Graphical Display)
- MMA-00058-**xx** TM8200 Control-Head Board (3-Digit Display)
- MMA-00034-**xx** TM8200 Control-Head Board (RJ45)
- MMA-00037-**xx** TM8100/TM8200 PCB Information (printed, pre-punched and shrink wrapped; comprises the latest releases of MMA-00015-**xx**, MMA-00016-**xx**, MMA-00020-xx, MMA-00021-xx, MMA-00031-**xx**, MMA-00032-**xx**, MMA-00033-**xx**, MMA-00034-**xx**, MMA-00035-**xx**, MMA-00050-**xx**, MMA-00058-**xx**, MMA-00069-**xx**).

The characters **xx** represent the issue number of the documentation.

All available documentation is provided on the TM8100/TM8200 Service CD, product code TMAA20-01. Updates may also be published on the Tait support website.

© Tait Electronics Limited November 2007

3DK Manuals

The following manuals are mainly of concern to third-party developers. The manuals are supplied on the 3DK (third-party developer's kit) resource CD.

- MMA-00011-**xx** TM8100/TM8200 3DK Hardware Developer's Kit Application Manual
- MMA-00014-**xx** TMAA30-02 TM8000 3DK Application Board Software Programmer's Manual
- MMA-00013-**xx** TMAA30-02 TM8000 3DK Application Board Service Manual
- MMA-00038-**xx** TM8100/TM8200 Computer-controlled Data Interface Protocol Definition

Publication Record

Issue	Publication Date	Description
01	March 2005	first release
02	May 2005	update for 40W/50W radios
03	August 2005	update to board issue 10 (B1, H5 and H6 bands) of 25W radios, incorporation of accessories manual
04	June 2006	include TM8200 3-digit-display control head, A4 and C0 bands, and information on issue -05 main board for B1, H5 and H6 bands
05	November 2007	include G2 and K5 bands, update product codes of control heads, new space frame and speaker clamp for control heads with 1-, 2- or 3-digit display

Alert Notices

Within this manual, four types of alerts are given to the reader: warning, caution, important and note. The following paragraphs illustrate each type of alert and its associated symbol.

Warning!! **This alert is used when there is a potential risk of death or serious injury.**

Caution **This alert is used when there is the risk of minor or moderate injury to people.**

Important This alert is used to warn about the risk of equipment damage or malfunction.

© Tait Electronics Limited November 2007

Note This alert is used to highlight information that is required to ensure that procedures are performed correctly.

Abbreviations

Abbreviation	Description
ACP	Adjacent Channel Power
ADC	Analog-to-Digital Converter
AGC	Automatic Gain Control
ALC	Automatic Level Control
ASC	Accredited Service Centre
C4FM	Compatible Four-level Frequency Modulation
CCTM	Computer-Controlled Test Mode
CODEC	Coder-Decoder
CSO	Customer Service Organisation
CTCSS	Continuous-Tone-Controlled Subaudible Signaling
DAC	Digital-to-Analog Converter
DC	Direct Current
DSP	Digital Signal Processor
DTMF	Dual-Tone Multi-Frequency
EPTT	External PTT (Press-To-Talk)
ESD	Electrostatic Discharge
FCL	Frequency Control Loop
FE	Front-End
FEC	Forward Error Correction
FPGA	Field-Programmable Gate Array
GPIO	General Purpose Input/Output
GPS	Global Positioning System
GUI	Graphical User Interface
IC	Integrated Circuit
IPN	Internal Part Number
IF	Intermediate Frequency

© Tait Electronics Limited November 2007

Abbreviation	Description
IQ	In-Phase and Quadrature
ISC	International Service Centre
LCD	Liquid-Crystal Display
LED	Light-Emitting Diode
LNA	Low-Noise Amplifier
LO	Local Oscillator
LPF	Low-Pass Filter
NPN	Negative-Positive-Negative
PA	Power Amplifier
PCB	Printed Circuit Board
PLL	Phase-Locked Loop
PNP	Positive-Negative-Positive
PSU	Power Supply Unit
PTT	Press-To-Talk
RISC	Reduced Instruction Set Computing
RSSI	Received Signal Strength Indication
SFE	Software Feature Enabler
SMA	Sub Miniature Version A
SMD	Surface-Mount Device
SMT	Surface-Mount Technology
SMPS	Switch-Mode Power Supply
SPI	Serial Peripheral Interface
TCXO	Temperature-Compensated Crystal Oscillator
TEL	Tait Electronics Limited
UHF	Ultra High Frequency
VCO	Voltage-Controlled Oscillator
VCXO	Voltage-Controlled Crystal Oscillator
VHF	Very High Frequency

© Tait Electronics Limited November 2007

© Tait Electronics Limited November 2007

Part A – Description of the Radio

1 Introduction 13

1.1 Frequency Bands 15
1.2 RF Output Power 15
1.3 Accessories 16
1.4 Product Codes 17
1.5 Labels 19
1.6 Specifications 19

2 Description 21

2.1 Mechanical Design 21
2.2 User Interfaces 37
2.3 Connectors 38
2.4 Hardware and Software Architecture 47
2.5 Operation in Receive Mode 52
2.6 Operation in Transmit Mode 57

3 Circuit Descriptions 65

3.1 Transmitter Circuitry 67
3.2 Receiver Circuitry 70
3.3 Frequency Synthesizer Circuitry 75
3.4 Frequency Control Loop 80
3.5 CODEC and Audio Circuitry 81
3.6 Power Supply Circuitry 85
3.7 Interface Circuitry 90
3.8 Digital Board 93
3.9 Control-Head Board with Graphical Display 96
3.10 Control-Head Board with 1-, 2- or 3-Digit Display 99
3.11 RJ45 Control Head 102

© Tait Electronics Limited November 2007

© Tait Electronics Limited November 2007

1 Introduction

The TM8100 and TM8200 series is a range of high-performance microprocessor-controlled radios for analog voice and data communication. The radios are designed for installation in vehicles but can also be used in desktop, remote-monitoring and similar applications.

This manual includes the information required for servicing the radio and its accessories.

This section describes the different options available for:

- frequency bands
- RF output power
- accessories
- product codes.

This section also gives an overview of the labels on the product and the specifications.

Figure 1.1 TM8200 mobile radios

Figure 1.2 TM8100 mobile radios

TM8115 radio with 2-digit-display control head

TM8110 radio with 1-digit-display control head

TM8105 radio with blank control head

rear view (25W radio)

© Tait Electronics Limited November 2007

1.1 Frequency Bands

The radios are available in the following frequency bands:

- 66 to 88MHz (A4)
- 136 to 174MHz (B1)
- 174 to 225MHz (C0)
- 216 to 266MHz (D1)
- 350 to 400MHz (G2)
- 400 to 470MHz (H5)
- 450 to 530MHz (H6)
- 450 to 520MHz (H7)
- 762 to 870MHz (K5 Tx)
  762 to 776MHz and 850 to 870MHz (K5 Rx)

The frequency bands are implemented by different main boards in the radio body. The control heads are identical for all frequency bands.

1.2 RF Output Power

The radio bodies are available with >25W and 25W RF output power.

The two RF output power options are implemented by different main boards in the radio body, mechanically different radio bodies, and different power connectors. The control heads are identical for all RF output power options.

The >25W radio is available in the following frequency bands:

- B1 (50W)
- G2 (40W)
- H5 (40W)
- H7 (40W)
- K5 (35W/30W)

The 25W radio is available in the following frequency bands:

- A4
- B1
- C0
- D1
- H5
- H6

© Tait Electronics Limited November 2007

1.3 Accessories

Tait offers a large variety of audio accessories, installation kits, internal options boards and other accessories such as a desktop power supply.

For more information on these accessories refer to "Part C – Accessories" on page 465.

Audio Accessories

The radios allow for the connection of a comprehensive range of audio accessories:

- rugged microphone (standard)
- DTMF microphone
- keypad microphone
- handset
- concealed microphone (TM8200) and concealed microphone kit (TM8100)
- high-power remote speaker
- remote PTT kit and hands-free kit.

Installation Kits

The radio is delivered with a vehicle installation kit, including a U-bracket. Installation of the radio is described in the user's guide or the installation guide.

Optional installation kits are:

- remote control-head kit for remote installation of the control head
- security bracket for secure and quick-release installation
- ignition-sense kit.

Internal Options Boards

The radio provides space for an internal options board inside the radio body connecting to an internal options connector. An aperture for an external options connector is also provided.

Tait offers the following internal options boards:

- line-interface board
- RS-232 board
- options-extender board.

Control-Head Options Boards

The radio provides space for a control-head options board inside the blank control head of the TM8105 and TM8252 radios.

Desktop Power Supply

A desktop power supply including the parts for mounting the radio is available for desktop installations.

© Tait Electronics Limited November 2007

1.4 Product Codes

This section describes the product codes used to identify products of the TM8100 and TM8200 mobile radio product lines.

General

The product codes of the TM8100 and TM8200 mobile radio product lines have the format:

TMA**abc**–**ddee**

where:

- **a** identifies the product category:
  A=accessory, B=radio body, C=control head, S=software feature
- **b**, **c**, **dd** and **ee** identify specific product features.

Radio Bodies

The product codes of the radio bodies have the format:

TMAB**bc**–**ddee[f]**

where:

- **b** identifies the architecture of the digital board:
  1=conventional analog
  2=conventional analog (dual-mode capability)
  3 identifies the digital boards of the digital TM9100 product line.
- **c** identifies the RF output power:
  2=25W, 3=25W (trigger-base), 4=30 to 59W,
  5=30 to 59W (trigger-base).
- **dd** identifies the frequency band:
  A4=66 to 88MHz, B1=136 to 174MHz, C0=174 to 225MHz, D1=216 to 266MHz, G2=350 to 400MHz, H5=400 to 470MHz, H6=450 to 530MHz, H7=450 to 520MHz, K5=762 to 870MHz (Tx), 762 to 776MHz and 850 to 870MHz (Rx).
- **ee** identifies any radio options:
  00=BNC RF connector, 01=mini-UHF RF connector
- **[f]** (optional) identifies a combination of software features as loaded at the time of manufacture

Control Heads

The product code of the control heads has the format:

TMAC**bc**–**dd[ee]**

where:

- **bc** identifies control-head user interface and hardware options
- **dd** identifies badging and configuration variants
- **[ee]** (optional) identifies variations from the standard firmware and or data load at the time of manufacture.

© Tait Electronics Limited November 2007

bc:	Control-head user interface and hardware options	dd	Badging and configuration variants
10	blank control head, no display, 9-pin D-range connector	0T 0A	Tait, TM8105 Auriga
20	2-digit-display control head	0T OE AT	Tait, TM8115 ECG, TM8115 Tait, Auriga (dual badge)
30	RJ45 control head, two RJ45 connectors	0T	Tait, TM8252
31	RJ45 control head for multi-body, two RJ45 connectors, RS485	0T 1T 2T	Tait, TM8200 Tait, TM8200, termination resistor in Tait, TM8200, termination resistor out
32	RJ45 control head, two RJ45 connectors, customer-specific product	0T	Tait, TM8124
34	RJ45 control head for dual-head, two RJ45 connectors, RS485	0T	Tait, TM8200
40	graphical-display control head	0T 0E 1T 2T	Tait, TM8200 ECG, TM8200 Tait, TM8200, yellow Tait, TM8200, green
42	graphical-display control head	1T 2T	Tait, TM8200, yellow Tait, TM8200, green
50	1-digit-display control head	0T AT	Tait, TM8110 Tait, Auriga (dual badge)
60	3-digit-display control head	0T	Tait TM8235

Note Product codes not listed here identify control-head configurations of the digital TM9100 product line.

© Tait Electronics Limited November 2007

1.5 Labels

Four external labels are attached to the bottom of the radio body:

- compliance information
- serial number and product code
- hot surface safety warning
- RF exposure safety warning.

Figure 1.3 Labels of the TM8100 and TM8200 product lines

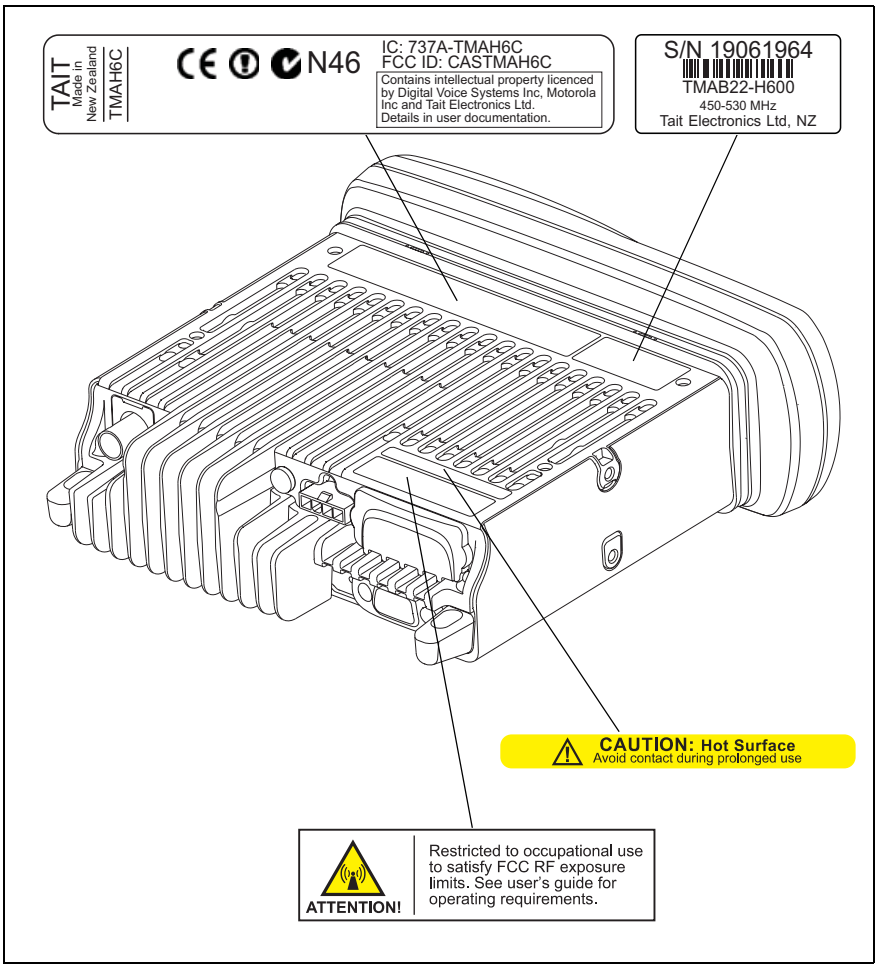

1.6 Specifications

For up-to-date specifications, refer to the area on the TaitWorld website reserved for TM8100 and TM8200 products.

© Tait Electronics Limited November 2007

2 Description

This section describes the mechanical design and architecture of the radio, explains the operation of the transceiver and the control head, and gives pinouts of the radio connectors.

2.1 Mechanical Design

Overview

The radio consists of the following main components:

- control head ①
- radio body ②.

Figure 2.1 Components of the radio

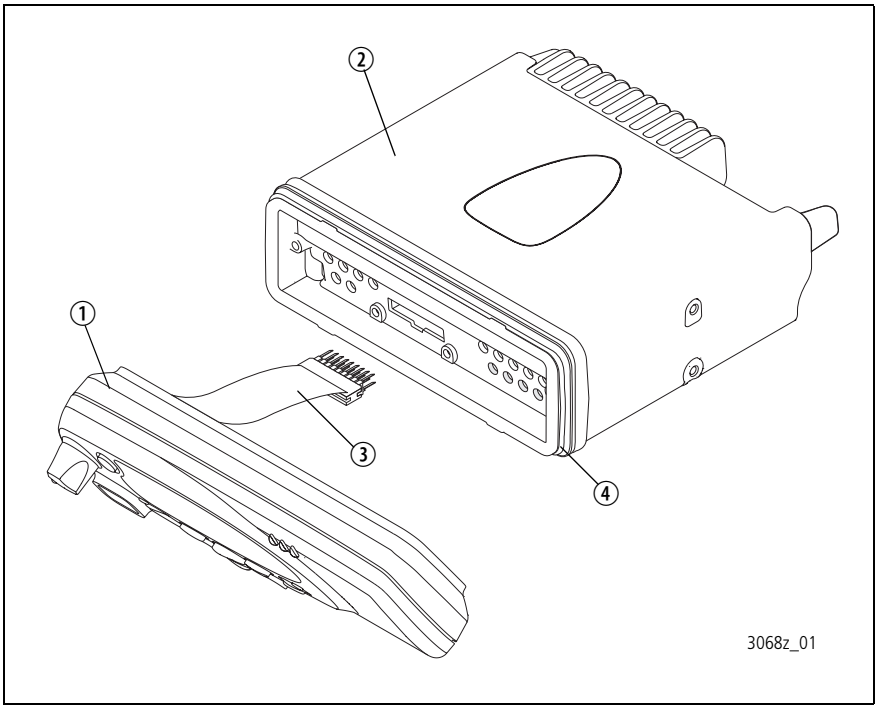

The control head ① clips firmly to the front face of the radio body ②, where a seal ④ provides IP54 class protection. A control-head loom ③ connects the control head to the radio body. Two dot-dash-dot marks at the bottom of the radio body indicate the positions where a screwdriver is applied to separate the control head from the radio body.

© Tait Electronics Limited November 2007

2.1.1 Radio Body

Overview

The radio body consists of the following main components (see Figure 2.2 on page 23):

- cover ①
- lid ③
- internal options board (optional)
- chassis ⑥
- main-board assembly ⑤.

Cover

The black plastic cover ① wraps over the top and sides of the radio body. Apertures in the sides of the cover allow access to the four external screw bosses of the radio body used for mounting the radio to the U-bracket.

Lid

The aluminium lid ③ is attached to the chassis ⑥ with four M4x16 Torx-head screws ②. A seal fitted inside a groove at the underside of the lid provides for IP54 class protection. The rear of the lid has an aperture for an external options connector, which may be fitted if an internal options board is used. If no external options connector is used, the aperture is sealed with a bung for IP54 class protection. The lid contains two of the four screw bosses to attach the radio to the U-bracket of the installation kit.

Internal Options Board (Optional)

On the inside of the lid, nine screw points are provided for mounting an internal options board, which can be sized and shaped as required.
The internal options board connects to the internal options connector of the main board. Tait offers a range of internal options board, which are described in the accessories section of this manual. For more information on how to create your own internal options board, contact Tait Electronics Limited.

Chassis

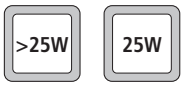

The aluminium chassis ⑥ is different for the >25 W radio and the 25 W radio.

The chassis ⑥ houses the main-board assembly ⑤, which is attached with five screws ④ to screw bosses inside the chassis and with two screws ⑧ through the rear of the chassis to the heat-transfer block.

The rear of the chassis has apertures for the RF, power and auxiliary connectors of the main board. If the auxiliary connector is not used, the aperture is sealed with a rubber bung ⑨ for IP54 class protection.
The RF connector has a rubber seal ⑦ which is fitted inside the aperture for the RF connector.

© Tait Electronics Limited November 2007

Figure 2.2 Components of the radio body

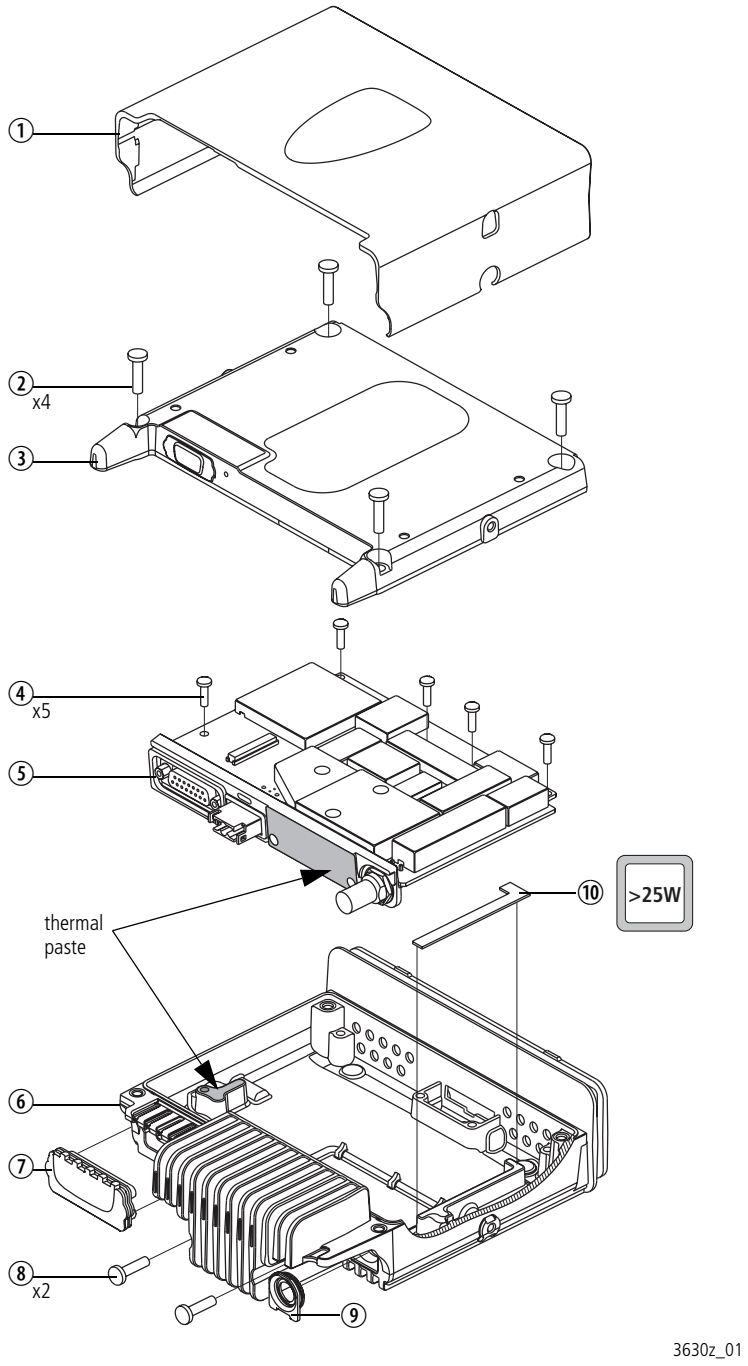

1 cover	6 chassis
2 screw M4x16 (x4)	7 auxiliary connector bung
3 lid assembly	8 screws M4x16 (x2)
4 screw M3x10 (x5)	9 seal
5 main-board assembly	10 gap pad (>25W radio only)

The front of the chassis has an aperture for the control-head connector. The control-head seal is fitted inside a groove around the flange at the front face of the chassis and provides for IP54 class protection when the control head is fitted. Two dot-dash-dot marks at the underside side of the chassis indicate the leverage points for removing the control head from the radio body.

The sides of the chassis contain two of the four screw bosses to attach the radio to the U-bracket of the installation kit.

For heat dissipation, the chassis has heat fins at the rear, grooves at the bottom, and holes in the front.

>25W 25W

The heat fins at the rear of the >25 W radio are longer than those of the 25 W radio. The grooves at the bottom of the >25 W radio are deeper than those of the 25 W radio.

>25W

For additional heat dissipation, the >25 W radio has an additional L-shaped gap pad ⑩ between the chassis and the main board.

© Tait Electronics Limited November 2007

Main-Board Assembly

The main-board assembly consists of the following components (see Figure 2.3):

- main board ⑯ with SMT components, digital board ③, shielding cans, and connectors
- heat-transfer block ⑦
- mounting and sealing elements for the connectors at the rear of the radio body.

Figure 2.3 Components of the main-board assembly

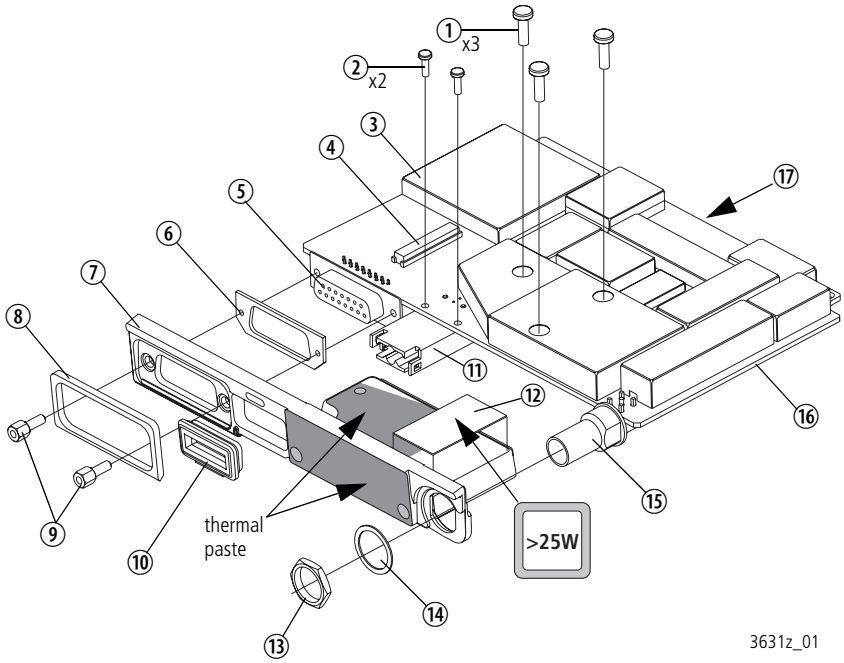

① M3x10 screw (x3)

② >25W radios:
M2.2x10 PT screw (x2)

25W radios:
K30x8 PT screw (x2)

③ digital board

④ internal options connector

⑤ auxiliary connector

⑥ inner foam D-range seal

⑦ heat-transfer block

⑧ outer foam seal

⑨ D-range screwlock fastener (x2)

⑩ power connector seal

⑪ power connector

⑫ gap pad (>25W radio only)

⑬ hexagonal nut

⑭ lock washer

⑮ RF connector

⑯ main board

⑰ control-head connector

© Tait Electronics Limited November 2007

The main board ⑯ is attached to the heat-transfer block ⑦ with three M3x10 Torx-head screws ① and the fastening elements ⑨, ⑬ and ⑭ of the auxiliary and RF connectors.

The inner foam D-range seal ⑥ seals the auxiliary connector against the heat-transfer block. The power connector seal ⑩ seals the power connector against the heat-transfer block.

>25W 25W

The power connector seal ⑩ of the >25 W radio (blue) is different to the seal of the 25 W radio (black).

Main Board

The main board ⑯ is a printed circuit board in SMT design with components on the top and bottom sides. A digital board ③ is reflow-soldered to the main board. Most components are shielded by metal cans.

There are different main boards for each frequency band and each RF output power configuration.

The internal options connector ④ for connecting an internal options board and the factory connector (not illustrated) for factory use are soldered to the top side of the main board. The control-head connector ⑰ (facing the front of the radio) and the auxiliary ⑤, power ⑪ and RF ⑮ connectors (facing the rear of the radio) are located on the bottom side of the main board.

>25W 25W

The >25 W radio has a black power connector ⑪ and the 25 W radio has a white power connector.

For more information on the connectors, refer to "Connectors" on page 38.

For heat dissipation, one of the screw bosses inside the chassis is in contact with the underside of the main board. A larger copper plate at the underside of the main board connects to the body of the heat-transfer block.

>25W

The >25 W radio has an additional gap pad between the heat-transfer block and the main board ⑯ which connects to an additional copper plate at the bottom side of the main board.

Heat-Transfer Block

The aluminium heat-transfer block ⑦ dissipates heat from the main board to the heat fins of the chassis. The heat-transfer block has a contact surface to the larger copper plate at the underside of the main board ⑯, and a contact surface to the rear of the chassis. All contact surfaces are coated with thermal paste.

Two self-adhesive foam seals ⑥ and ⑧ around the aperture of the auxiliary connector on either side of the heat-transfer block and the power connector seal ⑩ inside the aperture of the power connector are fitted to the heat-transfer block.

© Tait Electronics Limited November 2007

2.1.2 Control Head with Graphical Display

Overview

The control head can be divided into the following main areas:

- front panel with control elements, indicators, LCD, speaker, and concealed microphone (optional)
- space frame and seals
- control-head board with SMT components, shielding cans, connectors, and volume potentiometer
- control-head loom with female-female adapter
- adapter flange.

The circled numbers in this section refer to the items in Figure 2.4 on page 29.

Front Panel Assembly

The front panel assembly ⑯ consists of an injection-moulded plastic part with an integrated transparent light pipe element for the radio STATUS LEDs, a transparent lens which cannot be replaced, a cloth membrane which is fixed to the speaker grille, and a foam seal inside a rectangular LCD recess behind the lens. A label ⑱ with the radio model number is attached to the front panel assembly with self-adhesive coating and can be replaced for rebranding purposes.

Three clips on the rear side of the front panel assembly snap onto the space frame to hold the keypads ⑬ and ⑬, the LCD assembly ⑫ and the speaker ⑪ in place. The rear side of the front panel assembly also has four screw bosses to fasten the control-head board ⑤.

Knob for Volume-Control Potentiometer

The knob for the volume-control potentiometer ⑰ is fitted to the shaft of the volume-control potentiometer, which is soldered to the control-head board ⑤.

Keypads

The main keypad ⑬ (for the function, selection, and scroll keys) and the power keypad ⑭ protrude through apertures in the front panel assembly ⑯. The rear sides of these keypads connect directly to the relevant contacts on the control-head board ⑤.

LCD Assembly

The graphical-display LCD assembly ⑫ sits on a foam seal inside a rectangular recess of the front panel assembly ⑯. Another foam seal is attached to the rear of the LCD with self-adhesive coating. The LCD assembly has a loom, which runs through a slot in the space frame ⑨ and connects to a connector on the rear side of the control-head board ⑤.

© Tait Electronics Limited November 2007

Speaker

The speaker ⑪ sits inside a round recess of the front panel assembly, where a cloth membrane is fixed to the speaker grille. The speaker clamp ⑩ holds the speaker in position. The speaker cable plugs into the speaker connector on the rear side of the control-head board ⑤.

Note In some configurations the speaker may be disconnected.

Concealed Microphone (Optional)

A concealed microphone ⑮ consisting of the microphone capsule and a rubber seal can be fitted in a round recess inside the front panel assembly ⑯. The microphone leads are soldered to two pads on the top side of the control-head board. Before the microphone is fitted, a small hole is drilled in the recess to provide an acoustic path to the microphone. The hole is covered by the rubber seal to ensure that the control head remains sealed to IP54 standards. For more information refer to "TMAA02-07 Concealed Microphone" on page 519.

Space Frame

The aluminium space frame ⑨ snaps into the three clips of the front panel assembly ⑯. The front side of the space frame holds the keypads, the LCD assembly, and the speaker in place and at the same time allows access to their electrical contacts. The rear side of the space frame has four through-holes for the screws ④ of the control-head board ⑤ and two screw bosses to fit the adapter flange ②. Two light pipes ⑦ and ⑧ are fitted in recesses in the space frame and direct light from LEDs on the control-head board to the front panel. A slot at the top edge of the space frame allows the loom of the LCD assembly ⑫ to run to the control-head board.

Seals

Two identical ring seals ⑥ fitted to grooves around the perimeter of the space frame provide for IP54 class protection.

© Tait Electronics Limited November 2007

Figure 2.4 Components of the control head with graphical display

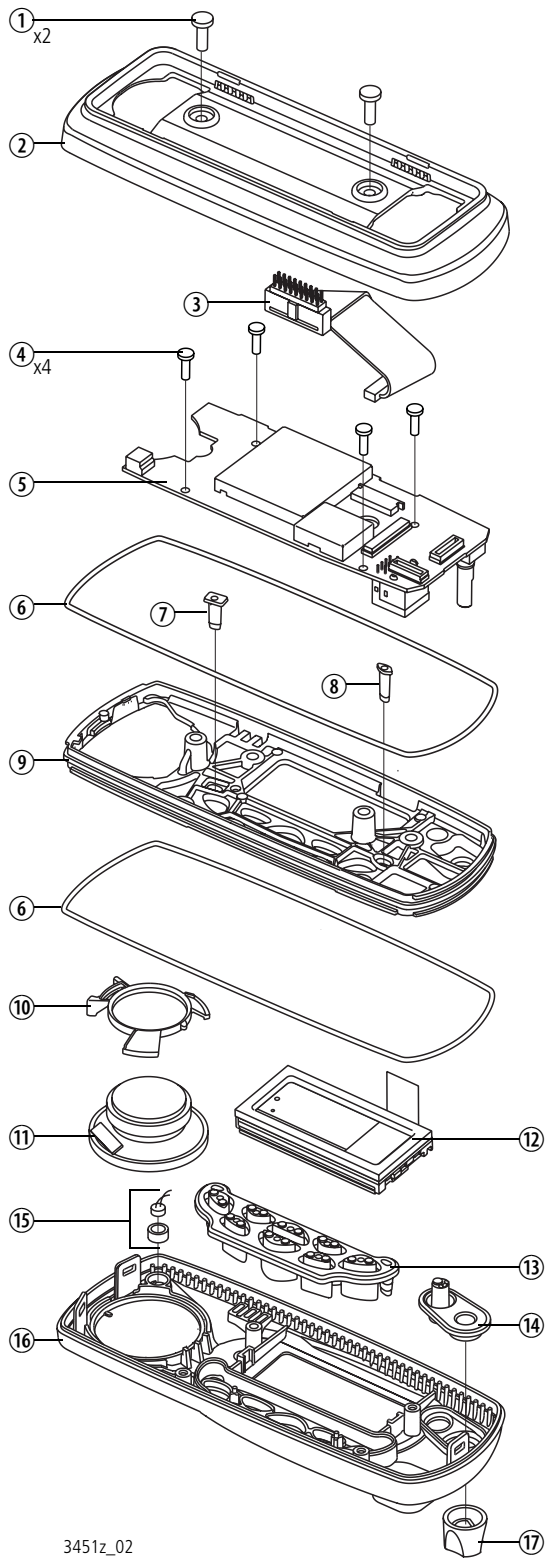

1. M4 x 12 Taptite screw (x2)
2. adapter flange
3. control-head loom assembly with female-female adapter
4. 3 x 10 PT screw (x4)
5. control-head board
6. space frame seal (x2)
7. short light pipe
8. long light pipe
9. space frame
10. speaker clamp
11. speaker
12. LCD assembly
13. main keypad
14. power keypad
15. concealed microphone (optional)
16. front panel assembly
17. knob for volume-control potentiometer

Control-Head Board

The control-head board ⑤ is a printed circuit board in SMT design with components on the top and bottom sides. Some SMT components are shielded by metal cans.

The control-head board is fitted to the front panel assembly ⑯ through the space frame ⑨ with four 3x10 PT screws ④.

The side facing the radio body has the connectors for the connection of the control-head loom, the LCD loom, the speaker, an optional control-head options board, and pads for the leads of the optional concealed microphone.

Figure 2.5 Connectors of the control-head board

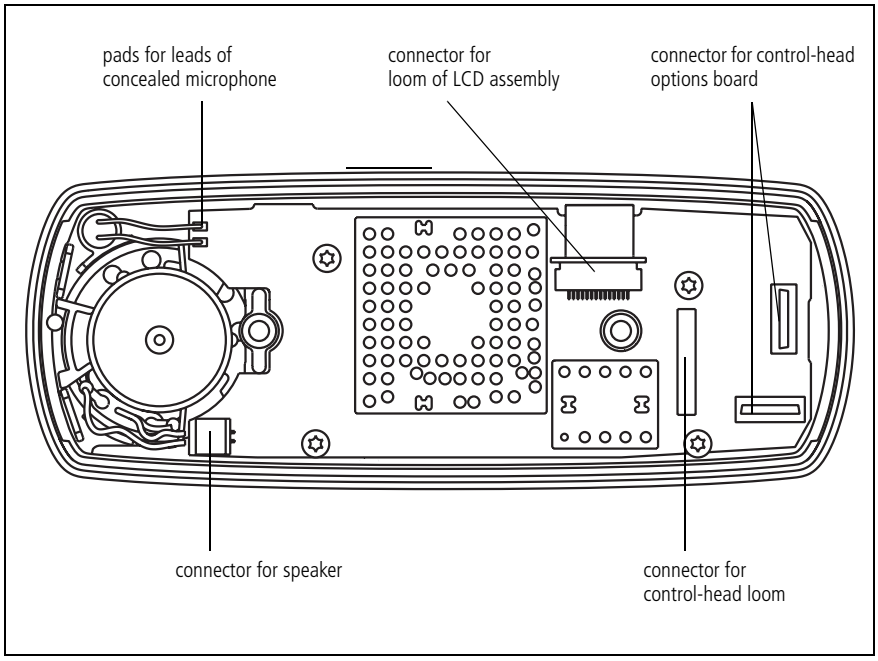

The side facing the front panel has the volume-control potentiometer, the microphone connector, the indicator and backlight LEDs, and the contacts for the keypads.

Control-Head Loom

The control-head loom ③ connects the connector on the control-head board to the control-head connector of the radio body. For more information refer to "Control-Head Connectors" on page 44.

Adapter Flange

The adapter flange ② is an injection-moulded plastic part, which is fitted to the space frame with two M4x12 Taptite screws ①.

© Tait Electronics Limited November 2007

2.1.3 Control Heads with 1-, 2- or 3-Digit Display

Overview

The control heads with 1-, 2- or 3-digit display can be divided into the following main areas:

- front panel with control elements, indicators, speaker, and optional concealed microphone
- space frame
- control-head board with SMT components, shielding cans, connectors, and volume potentiometer
- control-head loom with female-female adapter.

The circled numbers in this section refer to the items in Figure 2.6 on page 33.

Front Panel Assembly

The front panel assembly ⑦ consists of an injection-moulded plastic part with an integrated transparent light pipe element for the radio STATUS LEDs, a transparent lens which cannot be replaced, and a cloth membrane which is fixed to the speaker grille. Depending on the type of control head, the aperture on the lens is sized to display either one, two or three characters. A label with the radio model number is attached to the front panel assembly with self-adhesive coating and can be replaced for rebranding purposes.

Six clips on the space frame ⑥ snap into corresponding locations on the inside of the front panel assembly to hold the keypad ⑪, the LCD ⑫, the speaker clamp[1] ⑦, and the speaker ⑧ in place.

Knob for Volume-Control Potentiometer

The knob for the volume-control potentiometer ⑮ is fitted to the shaft of the volume-control potentiometer, which is soldered to the control-head board ⑤.

Keypad

The keypad ⑪ protrudes through apertures in the front panel assembly ⑦. The rear side of each key connects directly to the relevant contact on the control-head board ④. Four light pipes ⑨ and ⑩ are fitted in the appropriate recesses in the keypad and direct light from LEDs on the control-head board to the front panel.

LCD

The LCD ⑫ sits inside a rectangular recess of the front panel assembly ⑭ and is held in place by the space frame ⑥. Electrical contact between the LCD and the control-head board is ensured by two elastomeric strips ⑤ held in place by the space frame.

1. The speaker clamp ⑦ and a new space frame ⑥ were introduced in April 2007.

© Tait Electronics Limited November 2007

Speaker

The speaker ⑧ sits inside a round recess of the front panel assembly, where a cloth membrane is fixed to the speaker grille. The space frame ⑥ and the speaker clamp ⑦ hold the speaker in position. The speaker cable plugs into the speaker connector on the rear side of the control-head board ④.

Note In some configurations the speaker may be disconnected.

Concealed Microphone (Optional)

A concealed microphone ⑬ consisting of the microphone capsule and a rubber seal can be fitted in a round recess inside the front panel assembly ⑭. The microphone leads are soldered to two pads on the top side of the control-head board ④. Before the microphone is fitted a small hole is drilled in the recess to provide an acoustic path to the microphone. The hole is covered by the rubber seal to ensure that the control head remains sealed to IP54 standards. For more information refer to "TMAA02-06 Support Kit for Concealed and Dynamic Microphones" on page 511.

Space Frame

The plastic space frame ⑥ clips into the six recesses inside the front panel assembly ⑭. The front side of the space frame holds the keypad (with the four light pipes), the LCD, the speaker clamp[1], and the speaker in place and at the same time allows access to their electrical contacts. The rear side of the space frame has three holes for the screws ③ of the control-head board ④.

Control-Head Board

The control-head board ④ is a printed circuit board in SMT design with components on the top and bottom sides. There are different boards for the control heads with 1-, 2- and 3-digit display.s

The control-head board is clipped and then fitted to the space frame ⑥ with three 3x8 PT screws ③.

The side facing the radio body has the connectors for the connection of the control-head loom ①, the speaker, an optional control-head options board ②, and pads for the leads of the optional concealed microphone ⑬.

The side facing the front panel has the volume-control potentiometer, the microphone connector, the indicator and backlight LEDs, the contacts for the keypads, and the LCD.

Control-Head Loom

The control-head loom ① with the female-female adapter connects the connector on the control-head board ④ to the control-head connector of the radio body. For more information refer to "Control-Head Connectors" on page 44.

© Tait Electronics Limited November 2007

Figure 2.6 Components of the control head (1-, 2- or 3-digit display)

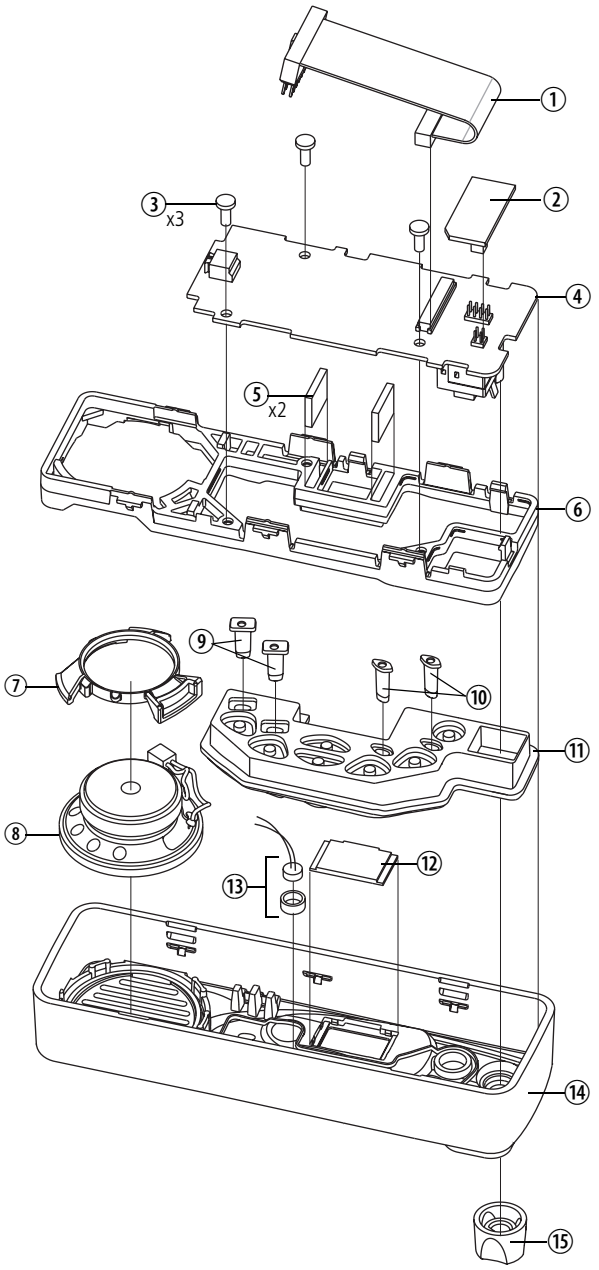

1. control-head loom with female-female adapter
2. control-head options board (optional)
3. 3 x 8 PT screw (x3)
4. control-head board
5. elastomeric strip (x2)
6. space frame
7. speaker clamp
8. speaker
9. short light pipe
10. long light pipe
11. keypad
12. LCD
13. concealed microphone (optional)
14. front panel assembly
15. knob for volume-control potentiometer

© Tait Electronics Limited November 2007

2.1.4 RJ45 Control Head

The RJ45 control head consists of the following parts:

- front panel
- control-head loom with female-female adaptor
- control-head board
- PCB bracket.

The circled numbers in this section refer to the items in Figure 2.7 on page 35.

Front Panel

The front panel ⑤ is an injection-moulded plastic part with two apertures for the fitted programming connector and a second optional RJ45 connector. When not in use, the apertures are sealed with two RJ45 bungs ⑤ to ensure that the control head is sealed to IP54 standards. There is also a hole for the POWER ON/OFF LED which illuminates through the label.

A label with the model number is attached to the front panel with self-adhesive coating and can be replaced for rebranding purposes.

The rear side of the front panel has four screw bosses to fasten the PCB bracket ④.

Control-Head Loom

The control-head loom ② with the female-female adapter connects the connector on the control-head board ① to the control-head connector of the radio body. For more information refer to "Control-Head Connectors" on page 44.

Control-Head Board

The control-head board ① is a printed circuit board in SMT design with some hand-soldered parts.

All components are placed on the top side, including the programming connector, the connector for the control-head loom ②, and the POWER ON/OFF LED.

The control-head board slides into a slot in the front panel and slots in the PCB bracket ④, and is held in place by two clips of the PCB bracket ④.

PCB Bracket

The PCB bracket ④ is an injection-moulded plastic part which is fitted to the front panel ⑤ with four 3x8 PT screws ③.

© Tait Electronics Limited November 2007

Figure 2.7 Components of the RJ45 control head

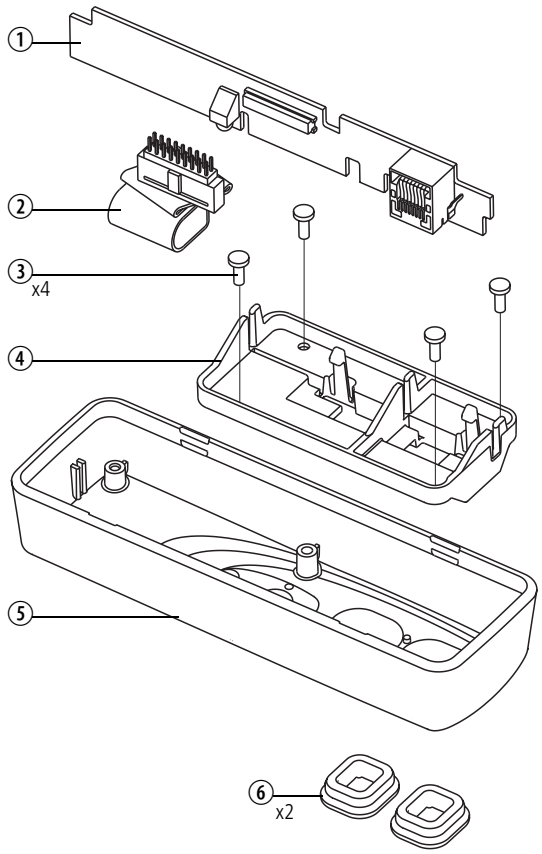

1. control-head board
2. control-head loom with female-female adapter
3. 3 x 8 PT screw (x4)
4. PCB bracket
5. front panel
6. RJ45 bung (x2)

2.1.5 Blank Control Head

The blank control head consists of the following parts:

- front panel
- control-head loom with programming connector
- seals.

The circled numbers in this section refer to the items in Figure 2.8 on page 36.

Front Panel

The front panel ④ is an injection-moulded plastic part with an aperture for fitting the programming connector, which is part of the control-head loom ⑥. A label with the model number is attached to the front panel with self-adhesive coating and can be replaced for rebranding purposes.

Control-Head Loom

The programming connector at one end of the control-head loom and a foam seal ⑤ are screwed to the front panel with a pair of lock-nuts ③. When the programming connector is not in use, the seal ② is fitted with two screws ① to ensure that the control head is sealed to IP54 standards.

The control-head loom with the female-female adapter connects to the control-head connector of the radio body. For more information refer to "Control-Head Connectors" on page 44.

There is provision in the blank control head for the fitting of a custom circuit board.

Figure 2.8 Components of the blank control head

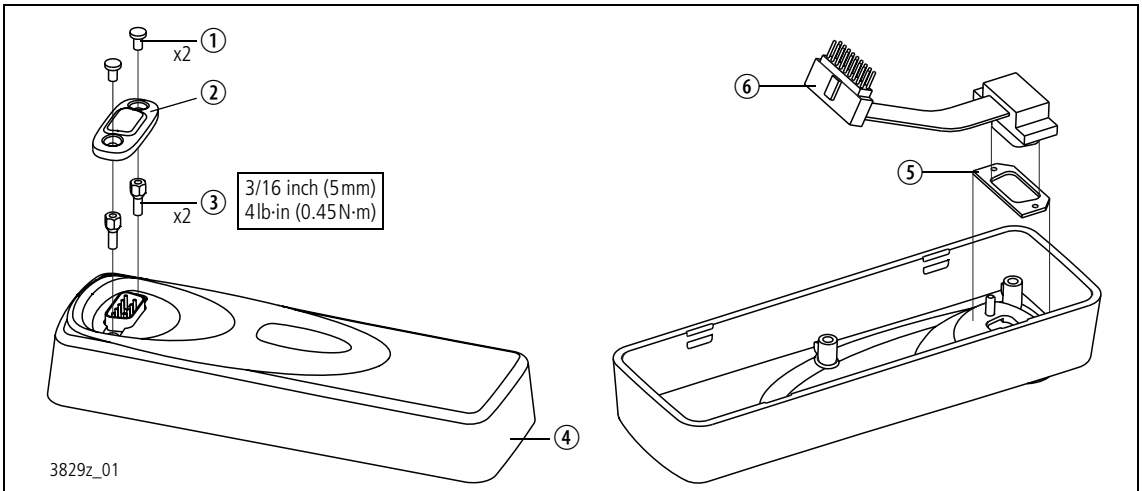

① UNX 4-40 x 3/16-inch pan Pozi screw (x2)
② cover seal
③ lock-nut (pair)
④ front panel
⑤ foam seal
⑥ control-head loom with female-female adapter

© Tait Electronics Limited November 2007

2.2 User Interfaces

Figure 2.9 shows the controls and indicators of the user interfaces. For more information refer to the following user's guides:

- TM8100 (1-digit and 2-digit-display control head)
- TM8250/TM8255 (graphical-display control head)
- TM8235 (3-digit-display control head).

Some keys have functions assigned to both short and long key presses. A short key press is less than one second, and a long key press is more than one second.

Figure 2.9 User interfaces

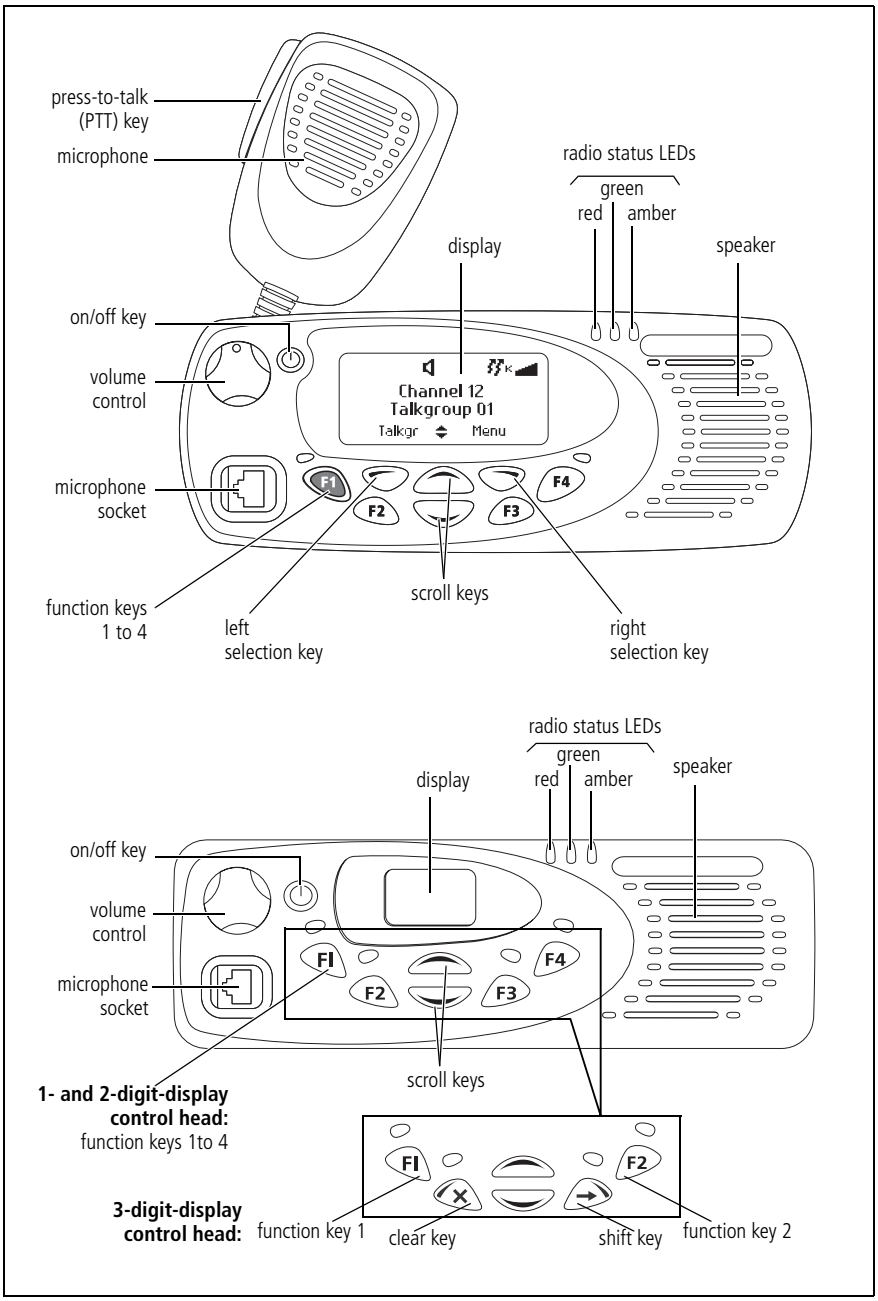

2.3 Connectors

Overview

This section describes the specifications and pinouts of the connectors of the radio body and the control head.

Figure 2.10 provides an overview of the connectors:

Figure 2.10 Connectors (radio with graphical-display control head)

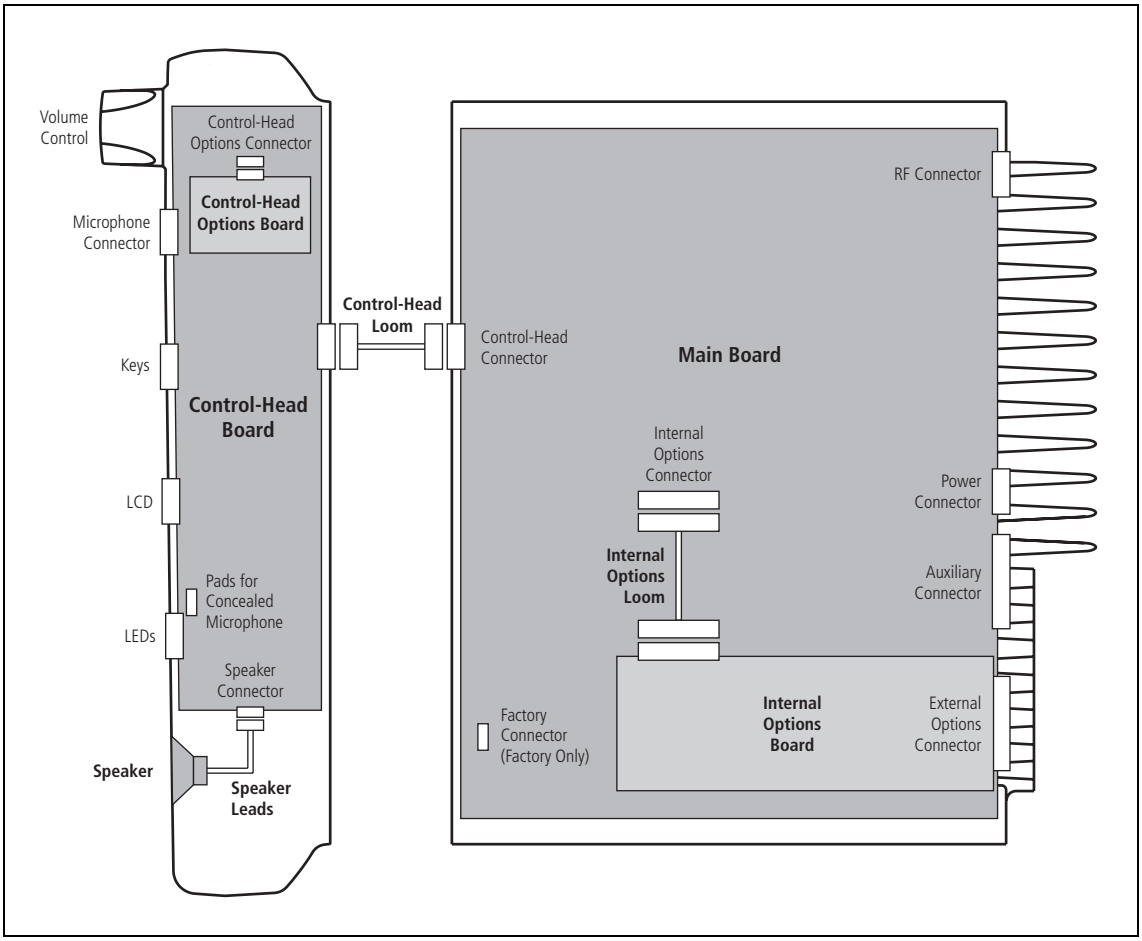

Figure 2.11 shows the connectors of the radio body.
Figure 2.12 shows the connectors of the control head.

For information on the factory connector of the main board and the internal connectors of the control head, refer to the PCB information of the main boards and the control-head board.

© Tait Electronics Limited November 2007

Figure 2.11 Connectors of the radio body (25W radio)

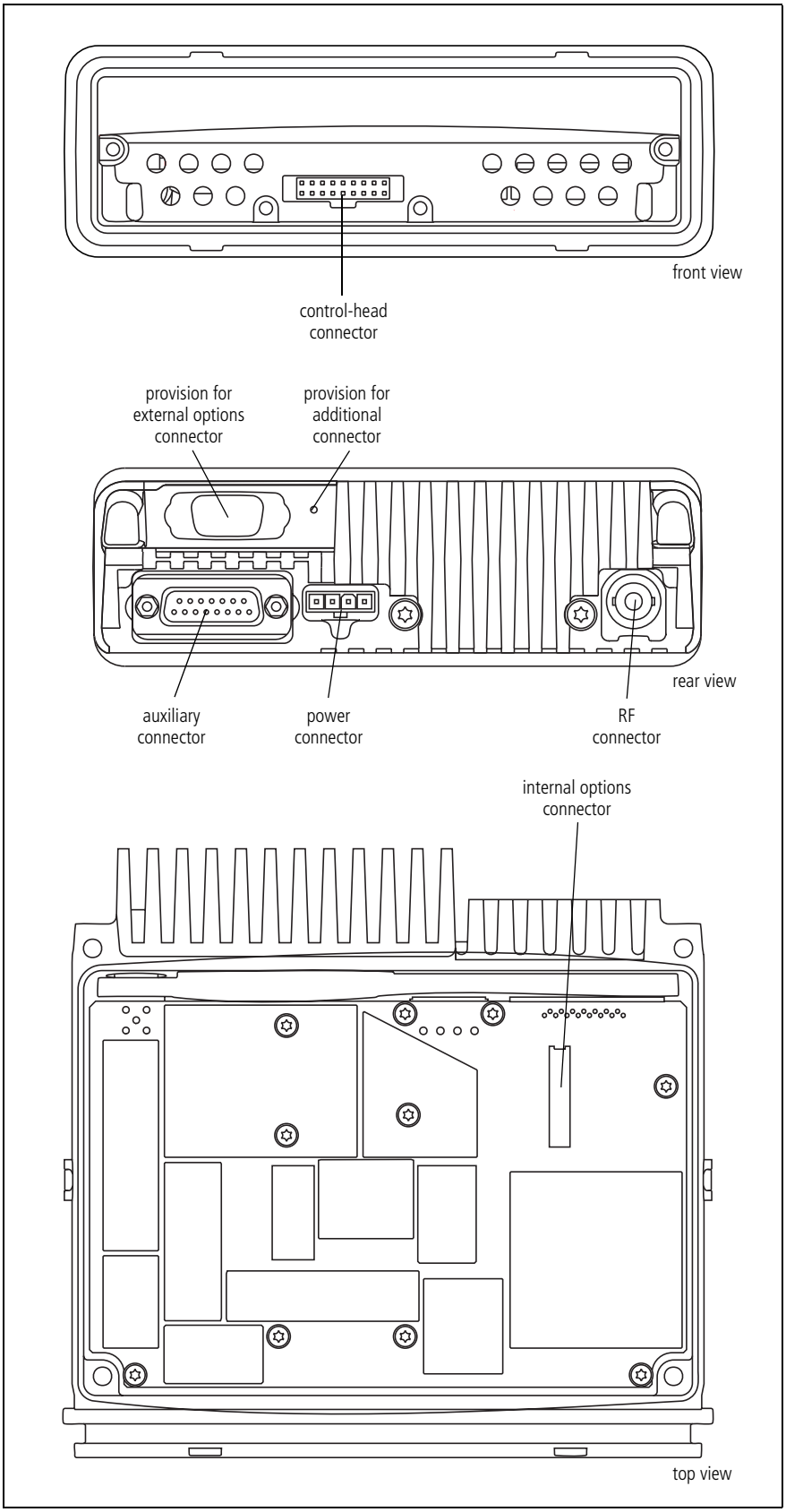

Figure 2.12 Connectors of the control head with graphical display

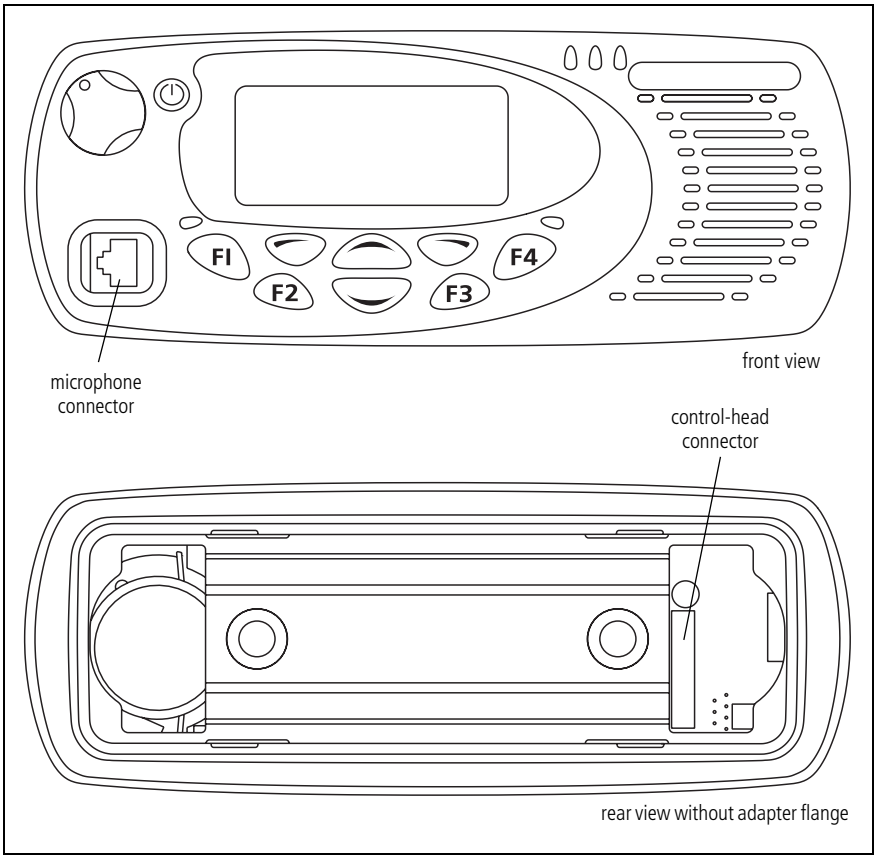

Figure 2.13 Connectors of the control head with 1-, 2- or 3-digit display

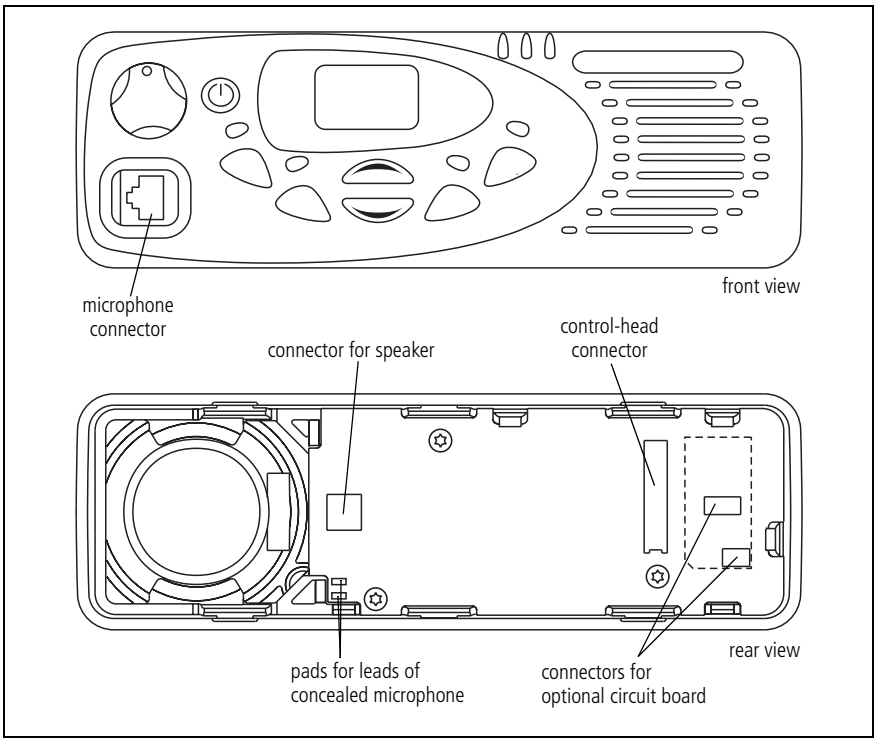

© Tait Electronics Limited November 2007

2.3.1 RF Connector

The RF connector is the primary RF interface to the antenna. The RF connector is a BNC connector or a mini-UHF connector with an impedance of 50Ω.

Important The maximum RF input level is +27 dBm. Higher levels may damage the radio.

Table 2.1 RF connector - pins and signals

Pinout	Pin	Signal Name	Signal Type
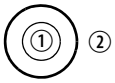 rear view	1	RF	RF analog
	2	GND	RF ground

2.3.2 Power Connector

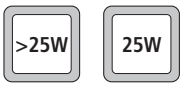

The power connector is the interface for the primary 13.8 V power source and the external speaker. The primary power source can be the vehicle battery or a mains-fed DC power supply. There are different power connectors for the >25 W and 25 W radios.

Important The speaker load configuration is balanced; the speaker output lines must **not** be connected to ground. Connecting a speaker output line to ground will cause audio power amplifier shutdown

Table 2.2 Power connector (radio) – pins and signals

Pinout	Pin	Signal name	Description	Signal type
>25 W radio 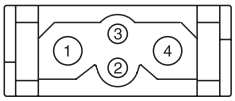 rear view **25 W radio** 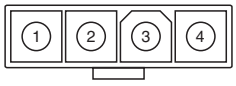 rear view	1	AGND	Earth return for radio body power source.	Ground
	2	SPK–	External speaker output. Balanced load configuration.	Analog
	3	SPK+	External speaker output. Balanced load configuration.	Analog
	4	13V8_BATT	DC power input for radio body and control head.	Power

© Tait Electronics Limited November 2007

2.3.3 Auxiliary Connector

The auxiliary connector is the standard interface for external devices that are typically connected to a radio. The auxiliary connector is a 15-way standard-density D-range socket. The auxiliary connector provides a serial port, three programmable input lines, four programmable digital I/O lines and audio I/O.

The I/O lines can be programmed for a variety of functions, logic levels, and in some cases, direction. Audio lines can also be programmed to tap into, or out of, different points in the audio processing chain. For more information refer to the online help of the programming application.

Table 2.3 Auxiliary connector – pins and signals

Pinout	Pin	Signal name	Description	Signal type
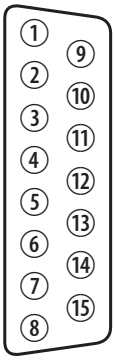 rear view	12	AUX_GPI1	General purpose digital input. Programmable function.	Digital, 3V3 CMOS
	5	AUX_GPI2	General purpose digital input. Programmable function. With LK3 fitted, GPI2 is an emergency power sense input.[a]	Digital, 3V3 CMOS
	4	AUX_GPI3	General purpose digital input. Programmable function. With LK2 fitted, GPI3 is a power sense input.[a]	Digital, 3V3 CMOS
	10	AUX_GPIO4	Programmable function and direction. Pads available to fit a higher power driver transistor on GPIO4 line	Digital, 3V3 CMOS input; open collector output with pullup
	2	AUX_GPIO5		
	9	AUX_GPIO6		
	1	AUX_GPIO7		
	11	AUX_TXD	Asynchronous serial port - Transmit data	Digital, 3V3 CMOS
	3	AUX_RXD	Asynchronous serial port - Receive data	Digital, 3V3 CMOS
	7	AUD_TAP_IN	Programmable tap point into the Rx or Tx audio chain. DC-coupled.	Analog
	13	AUD_TAP_OUT	Programmable tap point out of the Rx or Tx audio chain. DC-coupled.	Analog
	14	AUX_MIC_AUD	Auxiliary microphone input. Electret microphone biasing provided. Dynamic microphones are not supported.	Analog
	6	RSSI	Analog RSSI output.	Analog
	8	+13V8_SW[b]	Switched 13.8V supply. Supply is switched off when radio body is switched off.	Power
	15	AGND	Analog ground	Ground

a. For more information on hardware links refer to "Power-Sense Options" on page 85.

b. Can be switched or unswitched. For more information refer to "Connector Power Supply Options" on page 90.

© Tait Electronics Limited November 2007

2.3.4 Internal Options Connector

When installing an internal options board, the internal options connector is the electrical interface to the main board of the radio body.
The internal options connector provides similar I/O to the auxiliary connector. The internal options connector is an 18-pin 0.1 inch pitch Micro-MaTch connector.

Important The digital I/O signals are intended to interface directly with compatible logic signals only. Do not connect these signals to external devices without appropriate signal conditioning and ESD protection.

Table 2.4 Internal options connector – pins and signals

Pinout	Pin	Signal	Description	Signal type
top view	1	13V8_SW[a]	Switched 13V8 supply. Supply is switched off when the Radio Body is switched off.	Power
	2	AUD_TAP_OUT	Programmable tap point out of the Rx or Tx audio chain. DC-coupled.	Analog
	3	AGND	Analog ground.	Ground
	4	AUX_MIC_AUD	Auxiliary microphone input. Electret microphone biasing provided. Dynamic microphones are not supported.	Analog
	5	RX_BEEP_IN	Receive sidetone input. AC-coupled.	Analog
	6	AUD_TAP_IN	Programmable tap point into the Rx or Tx audio chain. DC-coupled.	Analog
	7	RX_AUD	Receive audio output. Post volume control. AC-coupled.	Analog
	8	RSSI	Analog RSSI output.	Analog
	9…15	IOP_GPIO1…7	General-purpose port for input and output of data. Programmable function and direction. With LK4 fitted, GPIO7 is a power sense input[b].	Digital. 3V3 CMOS
	16	DGND	Digital ground.	Ground
	17	IOP_RXD	Asynchronous serial port - Receive data.	Digital. 3V3 CMOS
	18	IOP_TXD	Asynchronous serial port - Transmit data.	Digital. 3V3 CMOS

a. Can be switched or unswitched. For more information refer to "Connector Power Supply Options" on page 90.
b. For more information on hardware links refer to "Power-Sense Options" on page 85.

2.3.5 Provision for External Options Connector

The radio has a mechanical interface for the external connector of an internal options board. This external options connector can be a 9-way standard-density or 15-way high-density D-range connector. If no internal options board is installed (standard configuration), the hole for the external options connector is sealed by a bung.

© Tait Electronics Limited November 2007

2.3.6 Control-Head Connectors

The control-head loom connects the connector on the front of the radio body to the connector on the rear of the control head.

The connector on the front of the radio body is an 18-way two-row right-angled IDC (insulation displacement connector) SMD header socket.

The connector on the rear of the control head is an 18-way 0.1 inch pitch Micro-MaTch SMD socket.

Table 2.5 Control-head connectors – pins and signals

Pinout	Pin	Signal	Description	Signal type
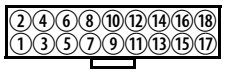 front view of radio body 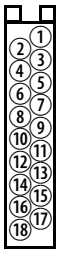 top view of control-head board	1	RX_AUD	Receive audio output. Post volume control. AC-coupled.	Analog
	2	+13V8[a]	Power supply output from radio body power source.	Power
	3	CH_TXD	Asynchronous serial port - Transmit data.	Digital. 3V3 CMOS.
	4	CH_PTT	PTT input from microphone. Also carries the hookswitch signal.	Digital
	5	CH_MIC_AUD	Fist microphone audio input.	Analog
	6	AGND	Analog ground.	Ground
	7	CH_RXD	Asynchronous serial port - Receive data.	Digital. 3V3 CMOS.
	8	DGND	Digital ground.	Ground
	9	CH_ON_OFF	Hardware power on/software-controlled power off input. Active low.	Digital
	10	VOL_WIP_DC	DC signal from volume pot wiper (grounded for graphical display).	Analog
	11	CH_SPI_DO	Data output signal to control head.	Digital. 3V3 CMOS.
	12	CH_LE	Latch enable output to control head.	Digital. 3V3 CMOS.
	13	CH_GPIO1	General purpose digital input/output.	Digital. 3V3 CMOS input. Open collector output with pullup.
	14	+3V3	Power supply to control head digital circuits.	Power
	15	CH_SPI_DI	Data input from control head.	Digital. 3V3 CMOS.
	16	CH_SPI_CLK	Clock output to control head.	Digital. 3V3 CMOS.
	17	SPK–	Speaker audio output for non-remote control head. Balanced load configuration.	Analog
	18	SPK+	Speaker audio output for non-remote control head. Balanced load configuration.	Analog

a. Can be switched or unswitched. For more information refer to "Connector Power Supply Options" on page 90.

© Tait Electronics Limited November 2007

2.3.7 Microphone Connector

The microphone connector of the control head is an RJ45 socket.

When the control head is connected to the control-head connector of the radio body using the loom provided, the microphone connector uses the following eight control-head connector signals:

Table 2.6 Microphone connector – pins and signals

Pinout	Pin	Signal name	Description	Signal type
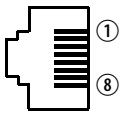 front view	1	MIC_RX_AUD	Receive audio output.	Analog
	2	+13V8[a]	Power supply output. Switched off when radio body is switched off.	Power
	3	MIC_TXD	Asynchronous serial port - Transmit data.	3.3V CMOS
	4	MIC_PTT	PTT input from microphone. Also carries hookswitch signal.	Digital
	5	MIC_AUD	Fist microphone audio input.	Analog
	6	AGND	Analog ground.	Analog ground
	7	MIC_RXD	Asynchronous serial port - Receive data.	3.3V CMOS
	8	MIC_GPIO1	General purpose digital input/output.	Open collector out 3.3V CMOS in

a. Can be switched or unswitched. For more information refer to "Connector Power Supply Options" on page 90.

2.3.8 Programming Connector (RJ45 Control Head)

The programming connector of the RJ45 control head is an RJ45 socket.

When the RJ45 control head is connected to the radio body, the programming connector uses the following signals.

Table 2.7 Programming connector – pins and signals

Pinout	Pin	Signal name	Description	Signal type
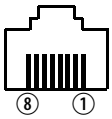 front view	1	PRG_RX_AUD	Receive audio output.	Analog
	2	+13V8[a]	Power supply output. Switched off when radio body is switched off.	Power
	3	PRG_TXD	Asynchronous serial port - Transmit data.	3.3V CMOS
	4	PRG_PTT	PTT input from microphone. Also carries hookswitch signal.	Digital
	5	PRG_MIC_AUD	Fist microphone audio input.	Analog
	6	AGND	Analog ground	Ground
	7	PRG_RXD	Asynchronous serial port - Receive data.	3.3V CMOS
	8	PRG_ON_OFF	Hardware power on/software-power off input. Active low.	Digital

a. Can be switched or unswitched. For more information refer to "Connector Power Supply Options" on page 90.

2.3.9 Programming Connector (Blank Control Head)

The programming connector of the blank control head is a 9-way standard-density D-range plug.

When the blank control head is connected to the radio body, the programming connector uses the following signals.

Table 2.8 Programming connector – pins and signals

Pinout	Pin	Signal name	Description	Signal type
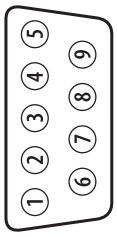 front view	1	PRG_RX_AUD	Receive audio output.	Analog
	2	PRG_TXD	Asynchronous serial port - Transmit data.	3.3V CMOS
	3	PRG_MIC_AUD	Fist microphone audio input.	Analog
	4	PRG_RXD	Asynchronous serial port - Receive data.	3.3V CMOS
	5	PRG_ON_OFF	Hardware power on/software-power off input. Active low.	Digital
	6	+13V8[a]	Power supply output. Switched off when radio body is switched off.	Power
	7	PRG_PTT	PTT input from microphone. Also carries hookswitch signal.	Digital
	8	AGND	Analog ground	Ground
	9	DGND	Digital ground	Ground

a. Can be switched or unswitched. For more information refer to "Connector Power Supply Options" on page 90.

© Tait Electronics Limited November 2007

2.4 Hardware and Software Architecture

Overview

This section describes the hardware and software modules of the radio and their interaction in the functioning of the radio.

2.4.1 Hardware Architecture

The electrical hardware of the radio is implemented on a main board inside the radio body and a control-head board inside the control head.

For a detailed description and block diagrams of individual circuits, refer to "Circuit Descriptions" on page 21.

Main Board

The main board inside the radio body includes the following circuitry:

- transmitter
- receiver
- frequency synthesizer
- digital board with a RISC processor and custom logic (implemented on an FPGA), memory, and a DSP
- CODEC and audio
- interface
- power supply.

The main board has an internal options connector which allows internal options boards to access a variety of discrete and programmable signals. For more information refer to "Internal Options Connector" on page 43.

For a basic block diagram of the main board, refer to Figure 2.14 on page 48.

For a more detailed block diagram of the transceiver, refer to Figure 2.16 on page 53.

Control-Head Board

The control-head board of the control head with graphical display includes:

- the circuitry needed for the controls and indicators on the front panel
- with a RISC processor and custom logic (implemented on an FPGA), and memory.

For a block diagram of this control-head board, refer to Figure 3.15 on page 97.

The control head with graphical display may have a concealed microphone inside the control head and also has provision for a separate circuit board that may be designed to perform a variety of tasks including—but not limited to—Bluetooth connectivity. No separate circuit board is required for a dynamic microphone.

© Tait Electronics Limited November 2007

Figure 2.14 Hardware architecture of the main board

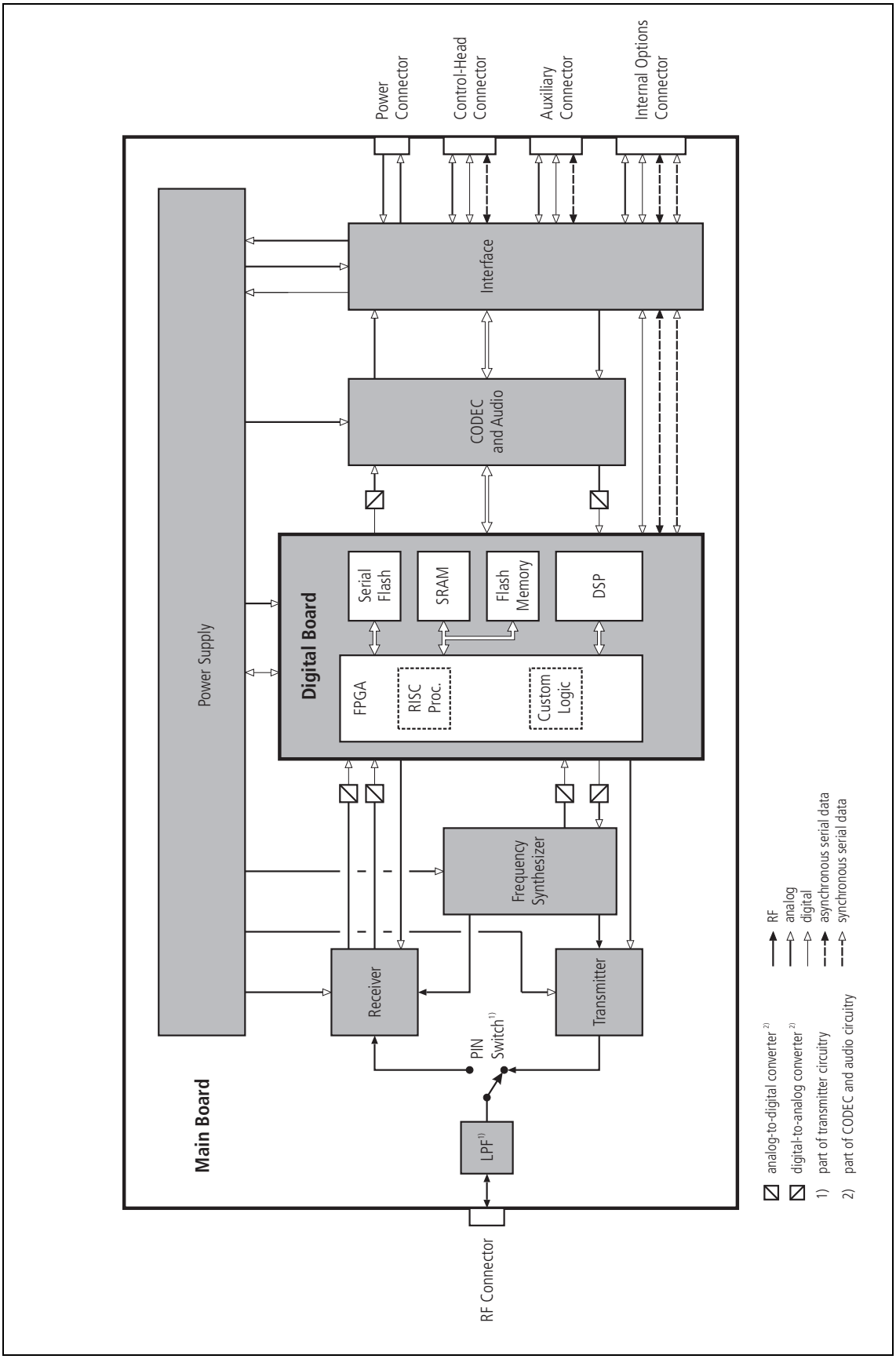

© Tait Electronics Limited November 2007

2.4.2 Software Architecture

Overview

Software plays an important role in the functioning of the radio. Some radio functions such as the graphical user interface, processing of the analog and digital signals, and the implementation of radio applications are completely implemented by software.

For a block diagram of the software architecture, refer to Figure 2.15 on page 50.

Software Modules

The following software modules are stored on the digital board of the main board:

- FPGA image, which includes the software-implemented RISC processor and the custom logic (the custom logic executes additional digital signal processing)
- boot code
- radio application code
- digital signal processing
- radio application database and radio calibration database.

The following software modules are stored on the control-head board with graphical display:

- FPGA image, which includes the software-implemented RISC processor
- boot code
- control-head application code
- control-head application database.

Hardware and interface drivers are part of the boot code, the RISC code, and—in the case of the main board—the DSP code.

© Tait Electronics Limited November 2007

Figure 2.15 Software architecture (radio with graphical-display control head shown)

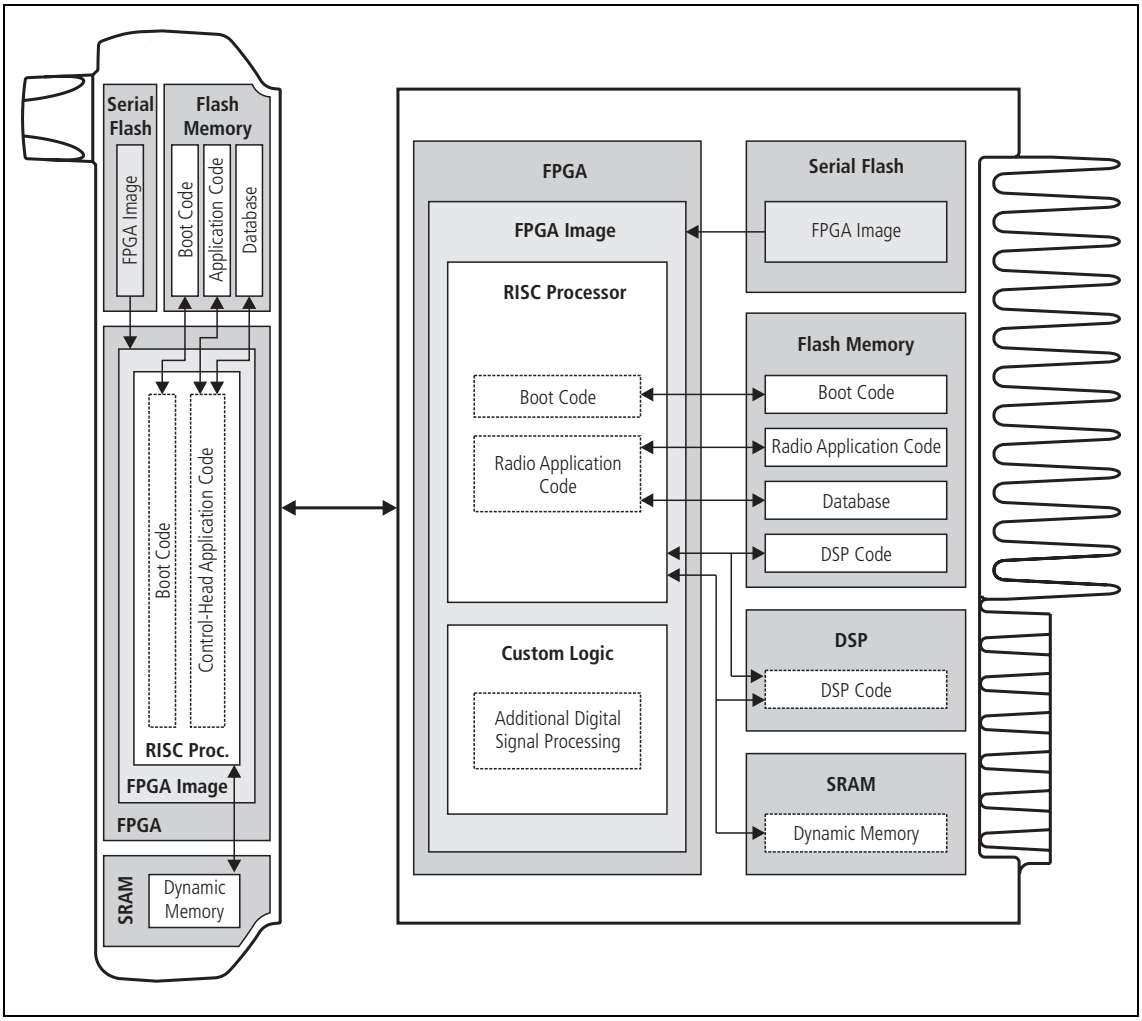

Software Start-Up When the radio is turned on, the following processes are carried out on the main board:

Note This process describes the software start-up into normal radio operation mode.

1. The FPGA image, which includes the RISC processor and the custom logic, is loaded from the serial flash to the FPGA.

2. The RISC processor executes the boot code, which carries out an initialization and auto-calibration, and—in the case of a fault—generates an error code for display on the control head.

3. Normal radio operation starts with:
   - the RISC processor executing the radio application code, including application software
   - the DSP executing the DSP code for processing of digital signals
   - the custom logic executing additional digital signal processing.

© Tait Electronics Limited November 2007

When the radio is turned on, the following processes are carried out on the control-head board of the control head with graphical display:

1. The FPGA image, which includes the RISC processor, is loaded from the serial flash to the FPGA.

2. The RISC processor executes the boot code, which carries out an initialization, and—in the case of a fault—generates an error code for display on the control head.

3. Normal radio operation starts with the RISC processor executing
   - the graphical user interface
   - the I/O processing
   - the user interface processing.

During normal radio operation the radio body and control head communicate via interface software, which is part of the radio and control-head application software.

Software Shutdown

On shutdown, the programming and calibration data is stored in the database, and power is removed from the radio.

Important On power loss, any changes made to the programming or calibration data may be lost.

Programming and Calibration Files

One of the servicing tasks is the downloading and uploading of programming and calibration files to the database. For more information, refer to "Servicing Procedures" on page 155 and the online help of the programming and calibration applications.

Software Upgrades

During servicing it may become necessary to upload software to a replacement main board, control head, or control head board using the *Tools > > Download* command of the programming application. For more information, refer to the online help of the programming application and to the technical notes accompanying the software files.

© Tait Electronics Limited November 2007

2.5 Operation in Receive Mode

Overview

This section describes the functioning of the transceiver in receive mode.

The operation of the transceiver is illustrated in Figure 2.16 on page 53. For the K5 front end, refer to

These block diagrams show the hardware modules integrated with the software modules:

- hardware (transmitter, receiver, CODEC and audio)
- RISC processor (on FPGA of digital board)
- custom logic (on FPGA of digital board)
- DSP (on digital board).

The receive path consists of three major functional parts:

- RF hardware
- digital baseband processing
- audio processing and signalling.

© Tait Electronics Limited November 2007

Figure 2.16 Transceiver operation

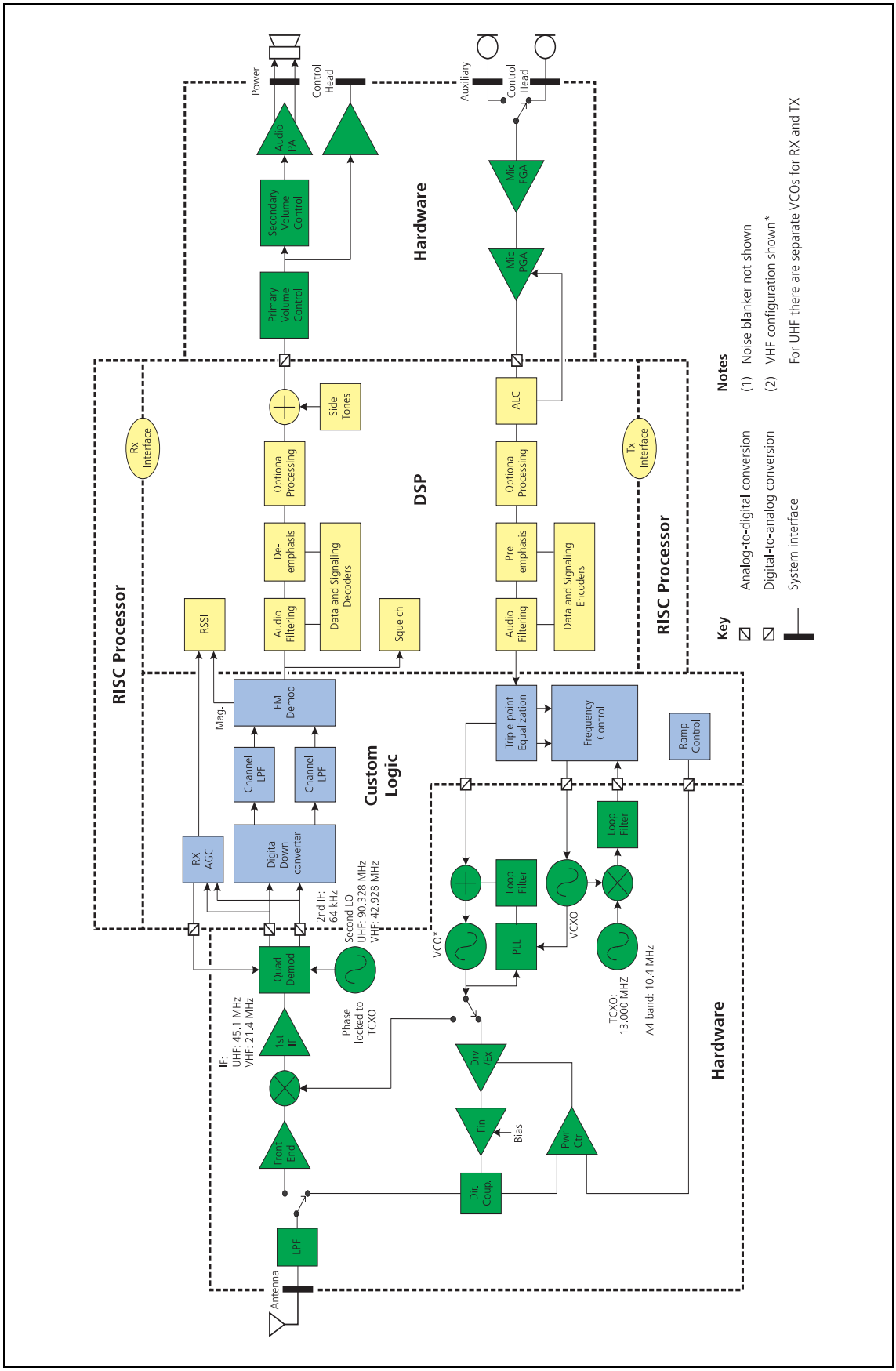

2.5.1 RF Hardware

PIN Switch

The RF PIN switch circuitry selects the RF path to and from the antenna to either the Tx or Rx circuitry of the radio. In addition to the switching functionality, the PIN switch is used to provide attenuation to the Rx front end in high signal-strength locations.

Front End and First IF

The front-end hardware amplifies and image-filters the received RF spectrum, then down-converts the desired channel frequency to a first intermediate frequency (IF1) of 21.4 MHz (VHF) or 45.1 MHz (UHF and K5 band) where coarse channel filtering is performed. The first LO signal is obtained from the frequency synthesizer and is injected on the low side of the desired channel frequency for all bands. In receive mode, the modulation to the frequency synthesizer is muted. See "Frequency Synthesizer" on page 59 for a description of the frequency synthesizer. The output of the first IF is then down-converted using an image-reject mixer to a low IF of 64 kHz. The K5 front-end has two paths (762 to 776 MHz and 850 to 870 MHz) which are selected depending on the Rx frequency.

Quadrature Demodulator

The LO for the image-reject mixer (quadrature demodulator) is synthesized and uses the TCXO as a reference. This ensures good centring of the IF filters and more consistent group-delay performance. The quadrature demodulator device has an internal frequency division of 2 so the second LO operates at 2 x (IF1 + 64 kHz). The quadrature output from this mixer is fed to a pair of ADCs with high dynamic range where it is oversampled at 256 kHz and fed to the custom logic device.

Automatic Gain Control

The AGC is used to limit the maximum signal level applied to the image-reject mixer and ADCs in order to meet the requirements for intermodulation and selectivity performance. Hardware gain control is performed by a variable gain amplifier within the quadrature demodulator device driven by a 10-bit DAC. Information about the signal level is obtained from the IQ data output stream from the ADCs. The control loop is completed within the custom logic. The AGC will begin to reduce gain when the combined signal power of the wanted signal and first adjacent channels is greater than about -70 dBm. In the presence of a strong adjacent-channel signal it is therefore possible that the AGC may start acting when the wanted signal is well below -70 dBm.

Noise Blanking (A4, B1 bands only)

With frequency bands between 66 and 174 MHz, a noise blanker can be selected to remove common sources of electrical interference such as vehicle ignition noise. The noise blanker functions by sampling the RF input to the receiver for impulse noise and momentarily disconnecting the first LO for the duration of the impulse. The response time of the noise blanker is very fast (tens of nanoseconds) and is quicker than the time taken for the RF signal to pass through the front-end hardware, so that the LO is disabled before the impulse reaches the IF stage where it could cause crystal filter ring.

© Tait Electronics Limited November 2007

2.5.2 Digital Baseband Processing

Custom Logic

The remainder of the receiver processing up to demodulation is performed by custom logic. The digitized quadrature signal from the RF hardware is digitally down-converted to a zero IF and channel filtering is performed at baseband. Different filter shapes are possible to accommodate the various channel spacings and data requirements. These filters provide the bulk of adjacent channel selectivity for narrow-band operation. The filters have linear phase response so that good group-delay performance for data is achieved. The filters also decimate the sample rate down to 48kHz. Custom logic also performs demodulation, which is multiplexed along with AGC and amplitude data and fed via a single synchronous serial port to the DSP. The stream is demultiplexed and the demodulation data used as an input for further audio processing.

Noise Squelch

The noise squelch process resides in the DSP. The noise content above and adjacent to the voice band is measured and compared with a preset threshold. When a wanted signal is present, out-of-band noise content is reduced and, if below the preset threshold, is indicated as a valid wanted signal.

RSSI

Receive signal strength is measured by a process resident in the DSP. This process obtains its input from the demodulator (RF signal magnitude value) and from the AGC (present gain value). With these two inputs and a calibration factor, the RF signal strength at the antenna can be accurately calculated.

Calibration

The following items within the receiver path are factory-calibrated:

- front-end tuning
- AGC
- noise squelch
- RSSI.

Information on the calibration of these items is given in the on-line help facility of the calibration application.

© Tait Electronics Limited November 2007

2.5.3 Audio Processing and Signalling

Audio Processing

Raw demodulated data from the receiver is processed within the DSP. The sample rate at this point is 48kHz with signal bandwidth limited only by the IF filtering. Scaling (dependent on the bandwidth of the RF channel) is then applied to normalize the signal level for the remaining audio processing. The sample rate is decimated to 8kHz and 0.3 to 3kHz bandpass audio filtering is applied. De-emphasis is then applied to cancel out the receive signals pre-emphasized response and improve signal to noise performance. Optional processing such as decryption or companding is then applied if applicable.

Data and Signalling Decoders

The data and signalling decoders obtain their signals from various points within the audio processing chain. The point used depends on the decoders' bandwidth and whether de-emphasis is required. Several decoders may be active simultaneously.

Side Tones

Side tones are summed in at the end of the audio processing chain. These are tones that provide some form of alert or give the user confidence an action has been performed. The confidence tones may be generated in receive or transmit mode. The sidetone level is a fixed proportion (in the order of -10dB) relative to full scale in the receive path.

CODEC

The combined audio and side-tone signal is converted to analog form by a 16-bit DAC with integral anti-alias filtering. This is followed by a programmable-gain amplifier with 45dB range in 1.5dB steps, that performs primary volume control and muting. The DAC and primary volume control are part of the same CODEC device (AD6521).

Output to Speakers

The output of the CODEC is fed to an audio power amplifier via a secondary volume control (not TM8100 radios) and to the control head via a buffer amplifier. The output configuration of the audio power amplifier is balanced and drives an internal speaker in non-remote control-head configuration and, optionally, an external speaker. The speaker loads are connected in parallel rather than being switched. The power delivered to each speaker is limited by its impedance. The internal speaker has 16Ω impedance whereas the external speaker can be as low as 4Ω.

Volume Control Configurations

There are two volume controls in the TM8200 radio but only one is active at any time when audio is being output to the speaker(s). The inactive volume control is set to maximum. For non-remote control-head configuration, the primary volume control is active. For remote control-head configuration, the secondary volume control is active. This enables fixed level audio feed to the remote control head, and independent volume control of the external speaker and the speaker of the remote control head.

© Tait Electronics Limited November 2007

2.6 Operation in Transmit Mode

Overview

This section describes the functioning of the transceiver in transmit mode.

The operation of the transceiver is illustrated in Figure 2.16 on page 53.

These block diagrams show the hardware modules integrated with the software modules:

- hardware (transmitter, receiver, CODEC and audio)
- RISC processor (on FPGA of digital board)
- custom logic (on FPGA of digital board)
- DSP block (on digital board).

The transmit path consists of three major functional parts:

- audio processing and signalling
- frequency synthesizer
- RF transmitter.

© Tait Electronics Limited November 2007

2.6.1 Audio Processing and Signalling

Microphone Input

The input to the transmitter path begins at the microphone input. There are two microphone sources: a fist microphone connected to the control head and an auxiliary microphone connected via the auxiliary or external options connector. Only electret-type microphones are supported. Support for optional dynamic fist microphones is facilitated by a hardware amplifier and filter in the control head, and must be activated in the programming software.

Analog Processing of the Microphone Input

The CODEC (AD6521) performs microphone selection and amplification. The microphone amplifier consists of a fixed gain amplifier of 16dB followed by a programmable-gain amplifier with 0 to 22dB gain.
The amplified microphone signal is converted to a digital stream by a 16-bit ADC with integral anti-alias filtering (0.1 to 3.2kHz). The digital stream is transported to the DSP for further audio processing.

Automatic Level Control

The ALC follows and is used to effectively increase dynamic range by boosting the gain of the microphone pre-amplifier under quiet conditions and reducing the gain under noisy acoustic conditions. The ALC function resides in the DSP and controls the microphone-programmable gain amplifier in the CODEC. The ALC has a fast-attack (about 10ms) and slow-decay (up to 2s) gain characteristic. This characteristic ensures that the peak signal level is regulated near full scale to maximize dynamic range.

DSP Audio Processing

The output of the automatic level control provides the input to the DSP audio processing chain at a sample rate of 8kHz. Optional processing such as encryption or companding is done first if applicable. Pre-emphasis, if required, is then applied. The pre-emphasized signal is hard limited to prevent overdeviation and filtered to remove high frequency components. The sample rate is then interpolated up to 48kHz and scaled to be suitable for the frequency synthesizer.

Data and Signalling Encoders

The data and signalling encoders inject their signals into various points within the audio processing chain. The injection point depends on the encoders bandwidth and whether pre-emphasis is required.

© Tait Electronics Limited November 2007

2.6.2 Frequency Synthesizer

Introduction

As shown in Figure 2.16, the frequency synthesizer consists of two main parts:

- FCL (frequency control loop)
- RF PLL, comprising RF PLL device, loop filter, VCO, and VCO output switch.

Frequency Control Loop

The FCL consists of the following:

- TCXO
- mixer
- loop filter
- VCXO
- frequency control block.

The FCL provides the reference frequency for the RF PLL. The FCL generates a high-stability reference frequency that can be both modulated and offset in fine resolution steps.

RF PLL

The RF PLL consists of the following:

- RF PLL device
- loop filter
- VCO
- VCO output switch.

The RF PLL has fast-locking capability but coarse frequency resolution. This combination of control loops creates improved frequency generation and acquisition capabilities.

Note that patents are pending for several aspects of the synthesizer design.

Operation of Control Loop

The RF PLL is a conventional integer-N-type design with frequency resolution of 25kHz (30kHz for the 66 to 88MHz A4 band). In transmit mode, the loop locks to the transmit frequency. In receive mode, it locks to the receive frequency *minus* the first IF frequency, except for the A4 band, where it locks to the receive frequency *plus* the first IF frequency.

In the 762 to 870MHz K5 band, there are two VCOs. In transmit mode, the loop locks to the transmit frequency. In receive mode, it locks to the receive frequency *plus* the first IF frequency when the receiver is operating in the lower sub-band (762 to 776MHz), and it locks to the receive frequency *minus* the first IF frequency when the receiver is operating in the upper sub-band (850 to 870MHz).

Initially, the VCO generates an unregulated frequency in the required range. This is fed to the PLL device (ADF4111) and divided down by a programmed ratio to approximately 25kHz. For the receive VCO in the K5

© Tait Electronics Limited November 2007

band, the frequency is divided down to 72kHz. This is because the sensitivity (K_{VCO} = 4MHz/V) is four times lower than that of the transmit VCO.

The reference frequency input from the FCL is also divided down to approximately 25kHz (30kHz for the A4 band, 72kHz receive for the K5 band). The phase of the two signals is compared and the error translated into a DC voltage by a programmable charge pump and dual-bandwidth loop filter. This DC signal is used to control the VCO frequency and reduce the initial error. The loop eventually settles to a point that minimizes the phase error between divided down reference and VCO frequencies. The net result is that the loop "locks" to a programmed multiple of the reference frequency.

The FCL generates an output of 13.012MHz±4kHz. Initially, a VCXO (voltage controlled crystal oscillator) produces a quasi-regulated frequency in the required range. The VCXO output is fed to a mixer where it is mixed with the 13.000MHz TCXO frequency. The mixer, after low-pass filtering to remove unwanted products, produces a frequency of 12kHz nominally. This is converted to digital form and transported to the frequency control block in the custom logic.

The frequency control block compares the mixer output frequency to a reference generated by the digital clock and creates a DC error signal. A programmed offset is also added. This error signal is converted to analog form and used to control the VCXO frequency and reduce the initial error. Once settled, the loop "locks" to the TCXO frequency with a programmed offset frequency. The FCL output therefore acquires the TCXO's frequency stability.

Modulation

The full bandwidth modulation signal is obtained from the DSP in digital form at a sample rate of 48kHz. In traditional dual-point modulation systems the modulation is applied, in analog form, to both the frequency reference and the VCO in the RF PLL, combining to produce a flat modulation response down to DC. Reference modulation is usually applied directly to the TCXO.

In the system employed in the radio, the frequency reference is generated by the FCL, which itself requires dual-point modulation injection to allow modulation down to DC. With another modulation point required in the RF PLL, this system therefore requires triple-point modulation.
The modulation signals applied to the FCL are in digital form while for the RF PLL (VCO) the modulation signal is applied in analog form.
The modulation cross-over points occur at approximately 30 and 300Hz as determined by the closed loop bandwidths of the FCL and RF PLL respectively.

Frequency Generation

The RF PLL has a frequency resolution of 25kHz (30kHz for the A4 band, 72kHz receive for the K5 band). Higher resolution cannot be achieved owing to acquisition-time requirements and so for any given frequency the error could be as high as ±12.5kHz. This error is corrected by altering the

© Tait Electronics Limited November 2007

reference frequency to the RF PLL. The FCL supplies the reference frequency and is able to adjust it up to ±300ppm with better than 0.1ppm resolution (equivalent to better than 50Hz resolution at the RF frequency). The FCL offset will usually be different for receive and transmit modes.

Fast Frequency Settling

Both the FCL and RF PLL employ frequency-acquisition speed-up techniques to achieve fast frequency settling. The frequency-acquisition process of the FCL and RF PLL is able to occur concurrently with minimal loop interaction owing to the very large difference in frequency step size between the loops.

Frequency Acquisition of RF PLL

In the RF PLL the loop bandwidth is initially set to high by increasing the charge-pump current and reducing time constants in the loop filter.
As a result, settling to within 1kHz of the final value occurs in under 4ms. In order to meet noise performance requirements the loop parameters are then switched to reduce the loop bandwidth. There is a small frequency kick as the loop bandwidth is reduced. Total settling time is under 4.5ms.

Frequency Acquisition of FCL

The FCL utilizes self-calibration techniques that enable it to rapidly settle close to the final value while the loop is open. The loop is then closed and settling to the final value occurs with an associated reduction in noise.
The total settling time is typically less than 4ms.

Calibration

The following items are calibrated in the frequency synthesizer:

- nominal frequency
- KVCO
- KVCXO
- VCO deviation.

Calibration of the nominal frequency is achieved by adding a fixed offset to the FCL nominal frequency; the TCXO frequency itself is not adjusted. The items KVCO and KVCXO are the control sensitivities of the RF VCO (in MHz/V) and VCXO (in kHz/V) respectively. The latter has temperature compensation.

© Tait Electronics Limited November 2007

2.6.3 RF Transmitter

RF Power Amplifier and Switching (>25W Radio)

>25W

The RF power amplifier and exciter of the 40W/50W radio is a five-stage line-up with approximately 40dB of power gain. The output of the frequency synthesizer is first buffered to reduce kick during power ramping. The buffer output goes to a discrete exciter that produces approximately 300 to 400mW output. This is followed by an LDMOS driver producing up to 8W output that is power-controlled. The final stage consists of two parallel LDMOS devices producing enough power to provide 40 to 50W at the antenna.

The RF power amplifier and exciter of the 30W/35W K5 band radio is a four-stage line-up with approximately 38dB of power gain. The output of the frequency synthesizer is first buffered to reduce kick during power ramping. The buffer output goes to a discrete exciter that produces approximately 500mW output. This is followed by an LDMOS driver producing up to 6W output. The final stage consists of two parallel LDMOS devices producing enough power to provide 30W at 762 to 806MHz and 35W at 806 to 870MHz at the antenna.

RF Power Amplifier and Switching (25W Radio)

25W

The RF power amplifier of the 25W radio is a four-stage line-up with approximately 37dB of power gain. The output of the frequency synthesizer is first buffered to reduce kick during power ramping. The buffer output goes to a broad-band exciter IC that produces approximately 200mW output. This is followed by an LDMOS driver producing up to 2W output that is power-controlled. The final stage consists of two parallel LDMOS devices producing enough power to provide 25W at the antenna.

Output of RF Power Amplifier

The output of the RF power amplifier passes through a dual-directional coupler, used for power control and monitoring, to the PIN switch. The PIN switch toggles the antenna path between the receiver and transmitter in receive and transmit modes respectively. Finally, the output is low-pass-filtered to bring harmonic levels within specification.

Power Control

The steady-state power output of the transmitter is regulated using a hardware control loop.

>25W

With the 40/50W radios and 30/35W K5 band radios, the sum of the forward power output from the RF power amplifier and reverse power reflected from the load is sensed by the directional coupler and fed back to the power control loop.

25W

With the 25W radios, the forward power output from the RF power amplifier is sensed by the directional coupler and fed back to the power control loop. The PA output power is controlled by varying driver gate bias voltage that has a calibrated maximum limit to prevent overdrive. The power control signal is supplied by a 13-bit DAC driven by custom logic.

© Tait Electronics Limited November 2007

Ramping

Power ramp-up consists of two stages:

- bias
- power ramping.

The timing between these two stages is critical to achieving the correct overall wave shape in order to meet the specification for transient ACP (adjacent channel power). A typical ramping waveform is shown in Figure 2.17.

Figure 2.17 Typical ramping waveforms

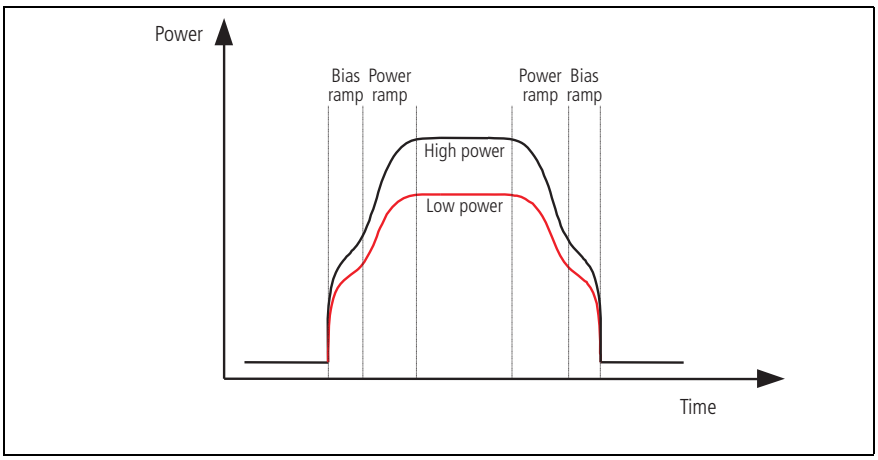

Bias Ramp-Up

The steady-state final-stage bias level is supplied by an 8-bit DAC programmed prior to ramp-up but held to zero by a switch on the DAC output under the control of a TX INHIBIT signal. Bias ramp-up begins upon release by the TX INHIBIT signal with the ramping shape being determined by a low-pass filter. Owing to power leakage through the PA chain, ramping the bias takes the PA output power from

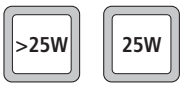

- less than –20 dBm for the 40/50 W radios
- –20 dBm to approximately 40 dB below steady-state power for the 30/35 W K5 band radios
- –10 dBm to approximately 25 dB below steady-state power for the 25 W radios.

Power Ramp-Up

The power ramp signal is supplied by a 13-bit DAC that is controlled by custom logic. The ramp is generated using a look-up table in custom logic memory that is played back at the correct rate to the DAC to produce the desired waveform. The ramp-up and ramp-down waveforms are produced by playing back the look-up table in forward and reverse order respectively. For a given power level the look-up table values are scaled by a steady-state power constant so that the ramp waveform shape remains the same for all power levels.

PIN Switch

The RF PIN switch circuitry selects the RF path to and from the antenna to either the Tx or Rx circuitry of the radio. In addition to the switching functionality, the PIN switch is used to provide attenuation to the Rx front end in high signal-strength locations.

© Tait Electronics Limited November 2007

© Tait Electronics Limited November 2007

3 Circuit Descriptions

Introduction

This section describes and illustrates the circuitry of the main board and the control-head boards.

The main board is divided into the following circuitry modules:

- transmitter
- receiver
- frequency synthesizer (including FCL)
- CODEC and audio
- power supply
- interface
- digital board.

Figure 3.1 gives an overview of the of the circuitry modules of the main board and shows how they are interconnected.

Sample Schematics

For up-to-date schematics refer to the relevant PCB information (refer to "Associated Documentation" on page 6).

© Tait Electronics Limited November 2007

Figure 3.1 Main board hardware architecture

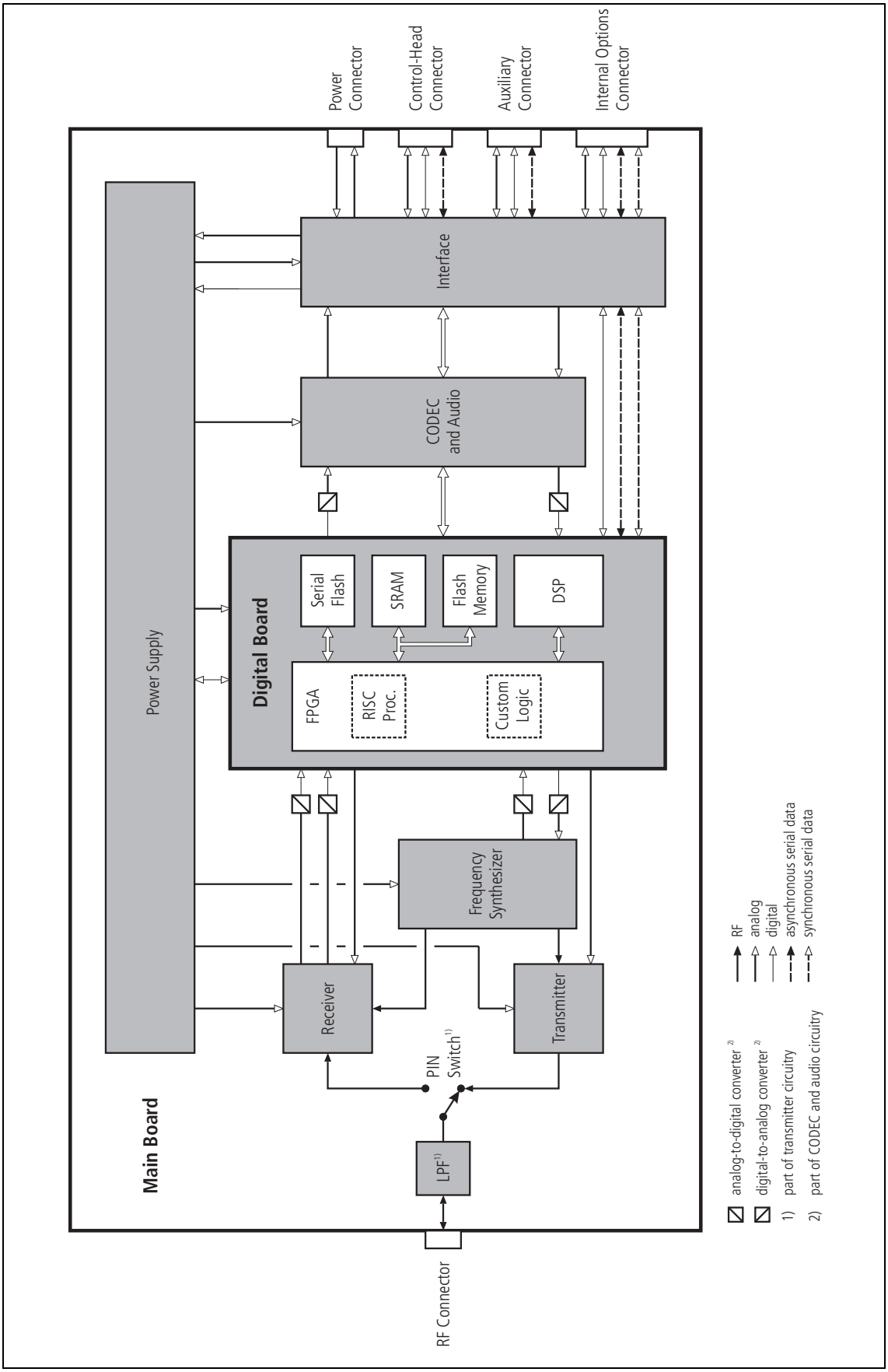

© Tait Electronics Limited November 2007

3.1 Transmitter Circuitry

Introduction

For a block diagram of the transmitter circuitry, refer to Figure 3.2.

>25W 25W

The transmitter circuitry is different for the 40 W/50 W radios, the 30 W/35 W radios (available for K5 band only), and the 25 W radios, and the different bands.

Exciter

With the 40 W/50 W radio, the discrete-component exciter is designed for specific bands (UHF or VHF). It is made up of Q3501, Q3502, and Q3505, which amplify the signal provided by the frequency synthesizer from its level of 7 to 10 dBm up to 24 dBm for the frequency bands 136 to 174 MHz and 400 to 520 MHz.

>25W

With the 30 W/35 W radio, the discrete-component exciter is made up of Q300 and Q303, which amplify the signal provided by the frequency synthesizer from its level of 7 to 10 dBm up to 26 dBm.

25W

With the 25 W radio, the broadband exciter is a common element in all the bands, as it operates across all frequencies from 66 to 530 MHz. It is made up of Q300 and Q303, which amplify the signal provided by the frequency synthesizer from its level of 7 to 10 dBm up to 24.5 dBm for the frequency band from 66 to 530 MHz.

The exciter operates in full saturation, thereby maintaining a constant output power independent of the varying input power level supplied by the synthesizer.

Power Amplifier

The power amplifier comprises the driver amplifier Q306 and two paralleled final devices Q309 and Q310.

>25W

With the 40 W/50 W radio, the signal from the exciter is amplified by Q306 to a power level of approximately 2 W (VHF) using a PD55003 and about 3 W (UHF) using a PD55008. The resulting signal is then amplified by Q309 and Q310 to produce a typical output power of 90 W at 155 MHz and 65 W across the UHF band, when measured after the series capacitors (C348, C349, C350) at the start of the directional coupler.

With the 30 W/35 W radio, the signal from the exciter is amplified by Q306 to a power level of approximately 3 W (VHF) using a PD55008.
The resulting signal is then amplified by Q309 and Q310 to produce a typical output power of 45 W, when measured after the series capacitors (C348, C349, C350) at the start of the directional coupler.

25W

With the 25 W radio, the 24.5 dBm signal from the exciter is reduced by a band-dependent pi-attenuator and is amplified by Q306. The resulting signal is then amplified a second time by Q309 and Q310 to produce a typical output power of 40 W when measured after the series capacitors (C348, C349, C350) at the start of the directional coupler.

© Tait Electronics Limited November 2007

Figure 3.2 Block diagram of the transmitter circuitry

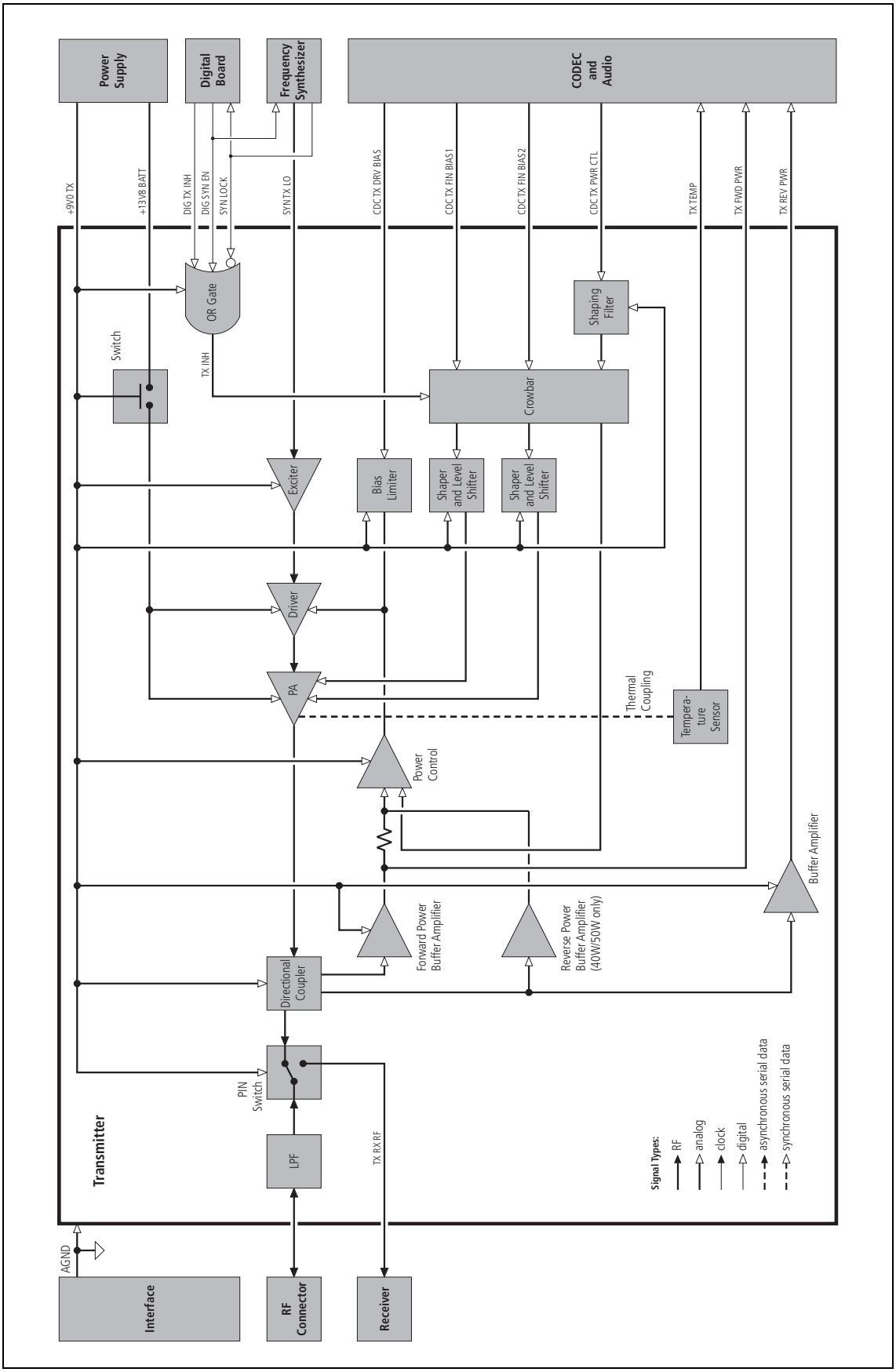

© Tait Electronics Limited November 2007

The high-level RF signal passes via the directional coupler, the transmit-receive PIN switch, and the LPF, through to the antenna. The LPF is used to attenuate unwanted harmonic frequencies.

Power Control Loop

Calibration is used to adjust the power control loop, thus setting the output of the transmitter to one of four preferred power levels:

>25W

- 10, 15, 25, and 50 W (VHF), and
  10, 15, 20, and 40 W (UHF) for 40 W/50 W radios
- 2, 5, 10, and 30 W (762–806 MHz), and
  2, 5, 10, and 35 W (806–870 MHz)) for 30 W/35 W radios

25W

- 1, 5, 12 and 25 W (all bands) for 25 W radios.

The loop maintains these power settings under changing environmental conditions. The control mechanism for this loop is via the DAC IC204 and one of the operational amplifiers making up IC301. The power control loop will be inhibited if for any reason an out-of-lock signal is detected from the synthesizer. This ensures that no erroneous signals are transmitted at any time.

>25W

With the 40 W/50 W radio, the power control loop processes the voltages from the forward and reverse power sensors in the directional coupler. This signal is fed to the buffer and a band-limited operational amplifier back to the gate of Q306. In this way, the transmitter is protected against bad mismatches.

With the 30 W/35 W radio, the power control loop processes the voltages from the forward and reverse power sensors in the directional coupler. This signal is fed back to the exciter device Q303 as well as to the driver Q306. This is to maintain the power control dynamic range.

25W

With the 25 W radio, the power control loop senses the forward power by means of the diode D304. This signal is fed to the buffer and a band-limited operational amplifier back to the gate of Q306.

A voltage clamp (one of the operational amplifiers of IC301) for Q306 limits the maximum control-loop voltage applied to its gate.

Directional Coupler

>25W

With the 40 W/50 W and 30 W/35 W radios, the directional coupler actively senses the forward power and the reverse power, and feeds them back to the power-control circuit.

25W

With the 25 W radio, the directional coupler actively senses the forward power and feeds it back to the power-control circuit. If the directional coupler detects too much reverse power, indicating a badly matched antenna, the transmitter will be reduced to the lowest power setting.

Temperature Sensor

For added protection, a temperature sensor ensures that the transmitter power is reduced to very low levels should a temperature threshold be exceeded. If the temperature does not decrease, the transmitter is switched off.

© Tait Electronics Limited November 2007

3.2 Receiver Circuitry

Introduction

For a block diagram of the receiver circuitry, refer to Figure 3.3 (B1, H5, H6 bands, 05 issue PCBs) and Figure 3.4 (other bands and later issue PCBs).

The receiver is of the triple-conversion superheterodyne type. The first two IF stages are implemented in hardware; the third stage is implemented in the FPGA (Field-Programmable Gate Array) of the digital board. The FPGA also carries out the demodulation of the received signals.

Front-End Circuitry

The front-end circuitry of all bands except K5 is a standard varicap-tuned singlet (band-pass filter), followed by an LNA (low-noise amplifier), and then a varicap-tuned doublet (image filter). The varicap tuning voltage `CDC RX FE TUNE` is provided by a DAC, with voltages calculated from a calibration table stored in non-volatile memory. The two varicap-tuned filters need to be calibrated to ensure that maximum sensitivity is achieved.

The K5 receiver has a dual 700 MHz/800 MHz front-end. This consists of a switch followed by a SAW (surface acoustic wave) filter, then an LNA (low-noise amplifier), and then a second SAW filter and a second switch. The varicap tuning voltage `CDC FE TUNE` is used to control the switches that select which front-end is used.

First Mixer

The first mixer of all bands except K5 is a standard diode-ring mixer with SMD (surface-mount device) baluns and a quadruple SMD diode. For the bands between 66 and 174 MHz (A4 and B1), the receiver includes a circuit for suppressing ignition noise. This circuit momentarily removes the LO (local oscillator) signal from the mixer when an ignition noise pulse is detected. The ignition-noise suppressor is selectable on a per-channel basis when the radio is programmed. The noise blanker is generally not fitted to trigger-base variants of the radio as it is not required in a fixed station environment.

The first mixer of the K5 band is an integrated high performance mixer (IC409). The first LO signal from the VCO is tapped from the collector of Q504.

The first LO injection is low side for all bands except the 66 to 88 MHz A4 band. In the 762 to 870 MHz K5 band radios, the first LO injection is *high* side for the 762 to 776 MHz sub-band and *low* side for the 850 to 870 MHz sub-band.

First IF Stage and Second Mixer

The first IF stage consists of a crystal channel filter (BPF1), followed by an IF amplifier, and then another crystal filter (BPF2). The second mixer is an IC quadrature mixer with an internal AGC amplifier. This IC has a divide-by-two function on the LO input in order to provide the quadrature LO frequencies required internally. The second LO frequency is synthesized by an integer PLL (IC403), which uses the TCXO frequency `SYN RX OSC` (13.0000 MHz) as its reference.

© Tait Electronics Limited November 2007

Figure 3.3 Block diagram of the receiver circuitry (05 issue boards, B1, H5, H6 bands)

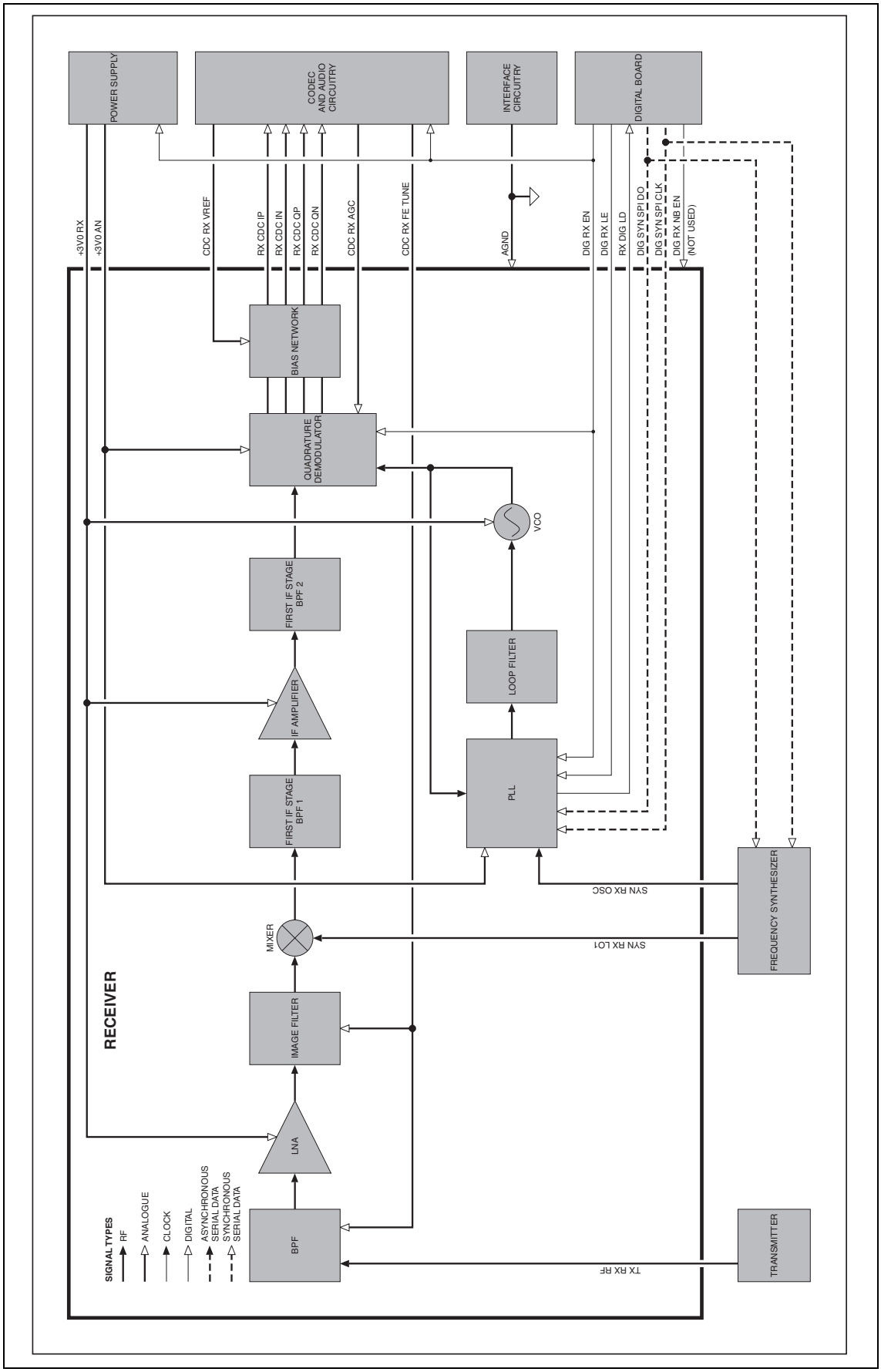

© Tait Electronics Limited November 2007

Figure 3.4 Block diagram of the receiver circuitry (B1, H5, H6 bands after PCB issue 05 and other bands)

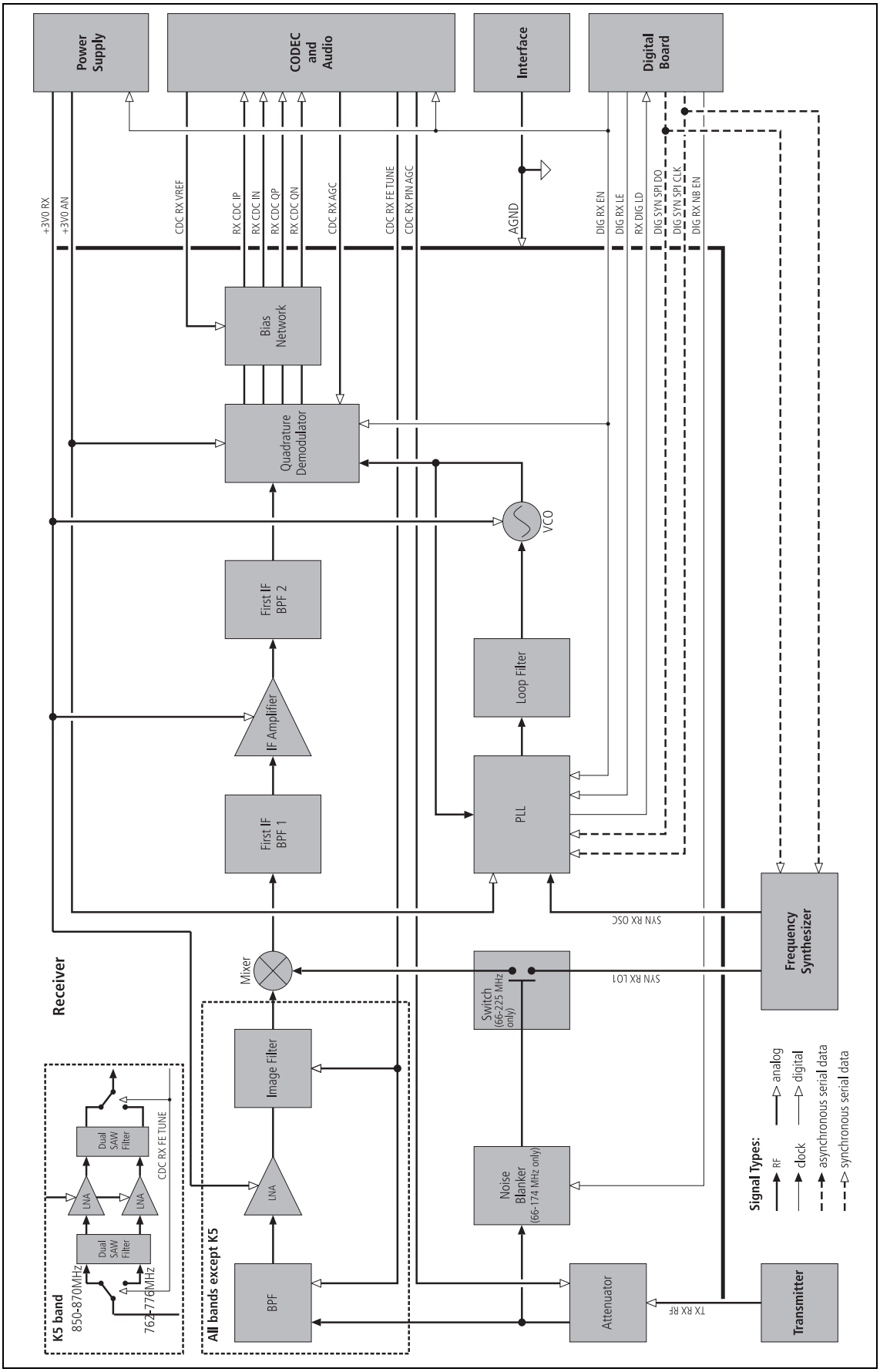

© Tait Electronics Limited November 2007

Frequencies of IF Stages

The frequency of the first IF stage depends as follows on the frequency band of the radio:

- VHF bands: 21.400029 MHz
- UHF and K5 bands: 45.100134 MHz.

The above are nominal values; the actual frequency will differ by a small amount depending on the exact initial frequency of the TCXO.
The frequency of the second IF stage will always be precisely 64.000 kHz once the TCXO calibration has been completed. (The TCXO calibration does not adjust the TCXO frequency, but instead adjusts the VCXO frequency, which in turn adjusts the VCO or first LO frequency as well as the frequency of the first IF stage. The second LO frequency remains fixed.)
The third IF stage is completely within the FPGA and is not accessible.

Demodulation

Demodulation takes place within the FPGA. Demodulated audio is passed to the DSP of the digital board for processing of the receiver audio signal. Raw demodulated audio can be tapped out from the DSP for use with an external modem. The modem may be connected to the auxiliary connector or to the external options connector when an internal options board is fitted.

Automatic Gain Control

The receiver has an AGC circuit to enable it to cover a large signal range. Most of the circuit functions are implemented in the FPGA. The FPGA passes the AGC signal to the CODEC IC204 for output from pin 14 (IDACOUT) and then via IC201 as the signal CDC RX AGC to pin 23 of the quadrature mixer IC400. As the antenna signal increases, the AGC voltage decreases.

Channel Filtering

The channel filtering is split between the first and third IF stages.
The channel filtering circuit in the first IF stage comprises a pair of two-pole crystal filters. The first filter has a 3 dB bandwidth of 12 kHz, and the second a 3 dB bandwidth of 15 kHz. Most of the channel filtering, however, is implemented in the FPGA. When the radio is programmed, the different filters are selected as assigned by the channel programming. The selectable filters plus the fixed crystal filters result in the following total IF 3 dB bandwidths in Table 3.1:

Table 3.1 Total IF 3 dB bandwidths

Channel spacing	All bands except K5	K5 band
Wide	12.6 kHz	12.00 kHz
Medium	12.0 kHz	9.0 kHz
Narrow	7.8 kHz	7.6 kHz

(The FPGA runs from the DIG SYS CLK signal, which has a frequency of 12.288 MHz.) The receiver requires the TCXO calibration to be completed to ensure that the channel filtering is centred, thereby minimizing distortion.

© Tait Electronics Limited November 2007

Received Signal Strength Indication

The RSSI is calculated in the FPGA and DSP, and can be passed as an analog voltage to the internal options interface and the external auxiliary interface. To obtain an accurate estimate of the RSSI (over the signal level and frequency), it is necessary to calibrate the AGC characteristic of the receiver and the front-end gain versus the receive frequency.

Front-End AGC Control

The receiver has a front-end AGC circuit to enable it to handle large receiver signals with minimal receiver distortion. This is very important for the correct operation of the THSD modem (Tait High-Speed Data). It enables THSD to maintain residual BER of $< 10^{-4}$. The front-end AGC is controlled by an algorithm which monitors the RSSI and configures the DAC to turn on the front-end attenuation via the receive pin diode of the PIN switch.

Noise Blanker (A4, B1 bands only)

If the frequency band is between 66 and 174 MHz, a noise blanker can be selected to remove common sources of electrical interference such as vehicle ignition noise. The noise blanker functions by sampling the RF input to the receiver for impulse noise and momentarily disconnecting the first LO for the duration of the impulse. The response time of the noise blanker is very fast (tens of nanoseconds) and is quicker than the time taken for the RF signal to pass through the front-end hardware, so that the LO is disabled before the impulse reaches the IF stage where it could cause crystal filter ring.

© Tait Electronics Limited November 2007

3.3 Frequency Synthesizer Circuitry

Introduction

For a block diagram of the frequency synthesizer circuitry, refer to Figure 3.5, and Figure 3.6 (FCL for the A4 band) and Figure 3.7 (VCO for the K5 band).

The frequency synthesizer includes an active loop filter, one or two VCOs and buffer amplifiers, and a PLL IC. The last-named uses conventional integer-N frequency division and includes a built-in charge pump. Speed-up techniques ensure a transmit-receive settling time of less than 4.5 ms while retaining low noise characteristics in static operation.

Power Supplies

Several power supplies are used by the frequency synthesizer owing to a combination of performance requirements and the availability of suitable components. The PLL IC includes analog and digital circuitry and uses separate power supplies for each section. The digital section is run on 3 V, while the analog section is run on approximately 5 V. The VCOs and buffer amplifiers run off a supply of about 5.3 V. The active loop filter requires a supply of 14 to 15 V (15.5 V for the K5 band), and a reference voltage of approximately 2.5 V.

Performance Requirements

Low noise and good regulation of the power supply are essential to the performance of the synthesizer. A 6 V regulator IC provides good line regulation of the 9 V supply and good load regulation. Good regulation of the power-supply line and load is essential for meeting the transient ACP requirements. The regulator output voltage is electrically noisy, however, and filtering is essential. Filtering of the power supply is achieved with two capacitance multipliers (Q508 and C585 for the VCO supply, and Q512 and C579 for the PLL and loop-filter supply). The VCO (or VCOs) use a separate capacitance multiplier because these multipliers have poor load regulation and the VCOs impart sufficient load transients to warrant a separate supply.

Effect of Tuning Range

For reasons of noise performance, the VCOs are designed to be tuned within a range of 2 to 12 V. Active tuning circuitry is required. An active loop filter incorporating an IC operational amplifier achieves this range with a suitable power supply voltage. Normal synthesizer switching behaviour involves overshoot, which dictates that the tuning voltage range must extend above and below the range of 2 to 12 V. The 14 V limit (15.5 V for the K5 band) is a result of limits on the working supply voltage of the IC operational amplifier.

Switch-mode Power Supply

The power supply `VCL SUPPLY` for the active loop filter is provided by a SMPS, which is in turn powered by 9 V. The SMPS consists of an oscillator (switching circuit) and a detector. The output voltage is monitored by a feedback circuit that controls the DC bias of the switching circuit to maintain a constant output voltage.

© Tait Electronics Limited November 2007

Synthesizer Circuitry

The essential function of the PLL frequency synthesizer is to multiply a 25 kHz reference frequency (30 kHz for A4 band, 72 kHz for K5 Rx) to give any desired frequency that is an integer multiple of 25 kHz (30 kHz for A4 band, 72 kHz for K5 Rx). There are some constraints imposed by the capabilities of the synthesizer hardware, especially the tuning range of the VCOs.

Reference Frequency

The approximately 25 kHz (30 kHz for A4, 72 kHz for K5 Rx) reference is obtained by dividing the approximately 13 MHz (2.612 kHz for A4) output of the FCL. Any error in the FCL output frequency will be multiplied by the synthesizer. Therefore, if the synthesizer is locked but not the FCL, then the synthesizer output frequency will be wrong. The FCL frequency division is performed by a digital counter inside the PLL IC. The divider setting is constant.

VCO Frequency and Output Power

The output frequency from the synthesizer is generated by a VCO. The VCO frequency is tuned across the frequency range of the radio by means of a DC control voltage, typically between 2 V and 12 V. The VCO output power is amplified by a buffer amplifier. The power is low and varies from band to band. The buffer output power depends on which mode—receive or transmit—is used. In receive mode the output power should be about 7 dBm (0 dBm for K5 Rx), whereas in transmit mode it should be about 9 dBm.

Dual VCOs

Some variants of the synthesizer use two VCOs: one for receive and one for transmit. Synthesizers with two VCOs share the same tuning signal. Only one VCO is switched on at a time, and so the PLL IC will see only one output frequency to tune. A portion of the RF output from the VCOs is fed to the RF input of the PLL IC. The RF signal is divided by an integer that gives 25 kHz (30 kHz for A4, 72 kHz for K5 Rx) if the output frequency is correct.

Phase-locked Loop

The PLL IC compares the 25 kHz reference (30 kHz for A4, 72 kHz for K5 Rx) and the divided VCO signal, and the error is used to control the internal charge pump. The charge pump is a current source that can sink or source current in proportion to the frequency or phase error. The output is a series of 25 kHz pulses (30 kHz for A4, 72 kHz for K5 Rx) with a width that is dependent on the phase error. When the output frequency of the synthesizer is correct, there is no error and the charge pump output will become open circuit.

Active Loop Filter

The loop filter continuously integrates the current pulses from the charge pump and produces a steady DC output voltage that tunes the VCO (or VCOs). When the VCO frequency is correct, there is no frequency error and therefore no charge-pump output, and so the loop filter's output voltage remains constant. If the frequency is too high or too low, the error will result in the output of charge-pump current pulses (negative or positive depending on the sign of the error). The loop filter's output voltage will change accordingly, causing the VCO frequency to change in proportion. The synthesizer design is such that normally the VCO frequency will be automatically corrected.

© Tait Electronics Limited November 2007

Figure 3.5 Block diagram of the frequency synthesizer circuitry

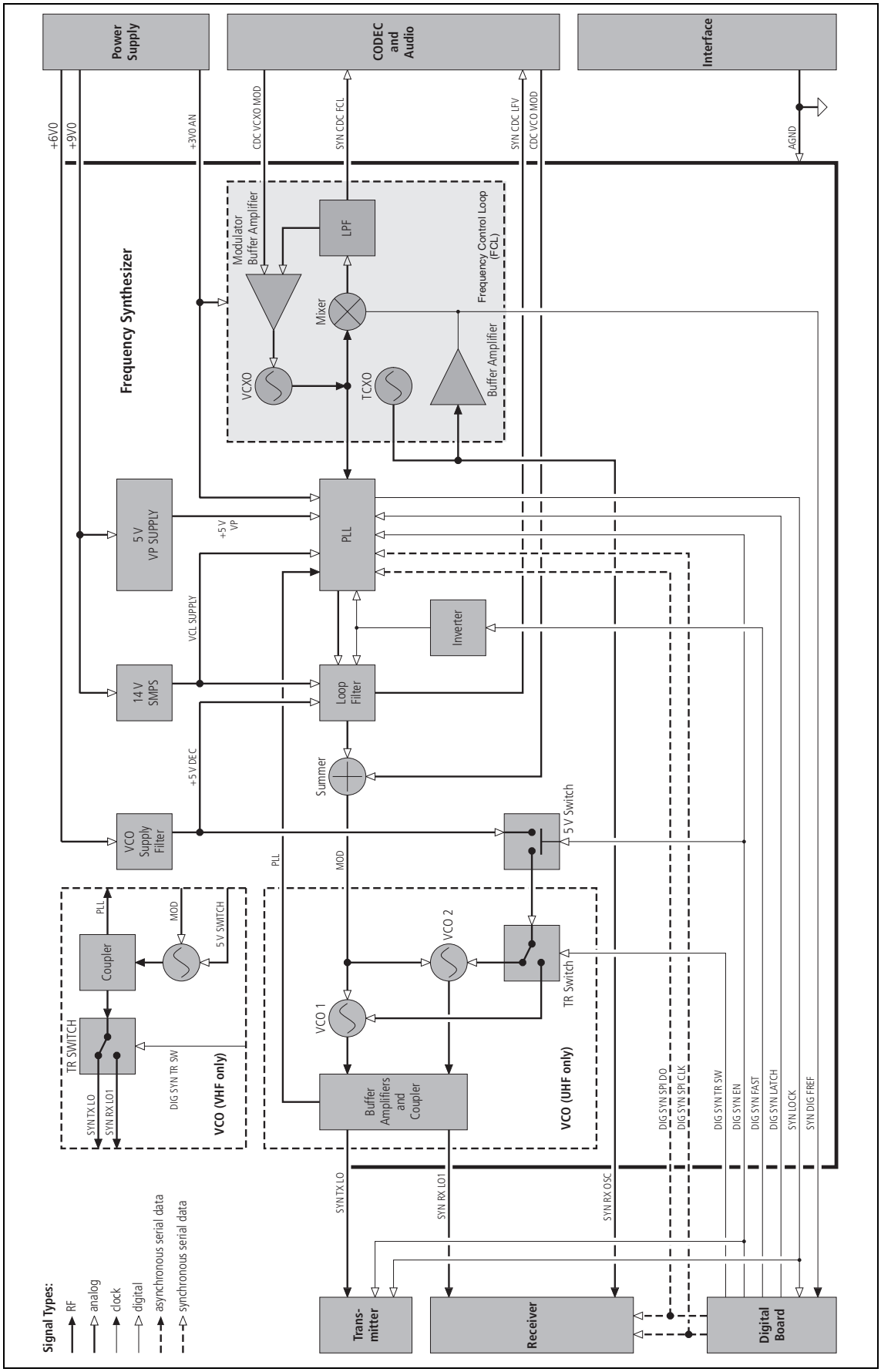

© Tait Electronics Limited November 2007

Figure 3.6 Block diagram of the frequency control loop circuitry—A4 band

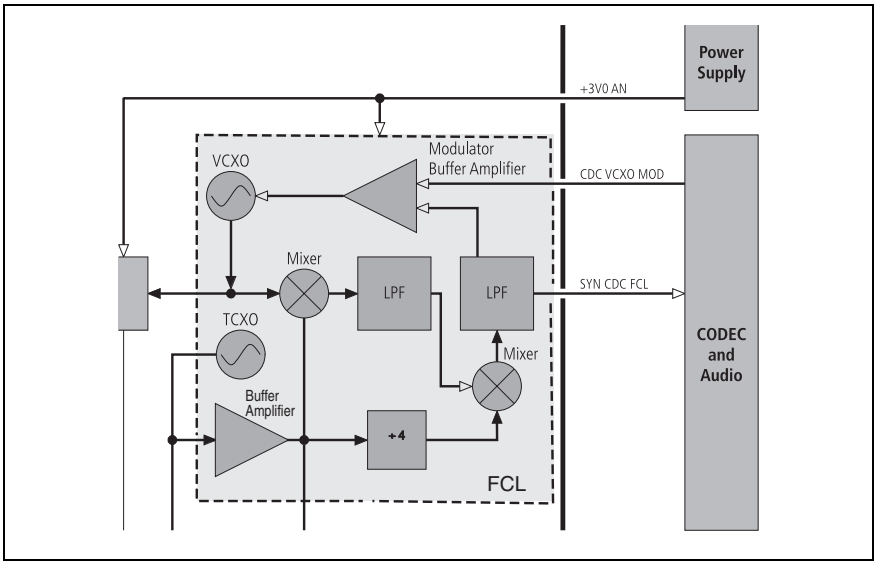

Figure 3.7 Block diagram of the VCO—K5 band

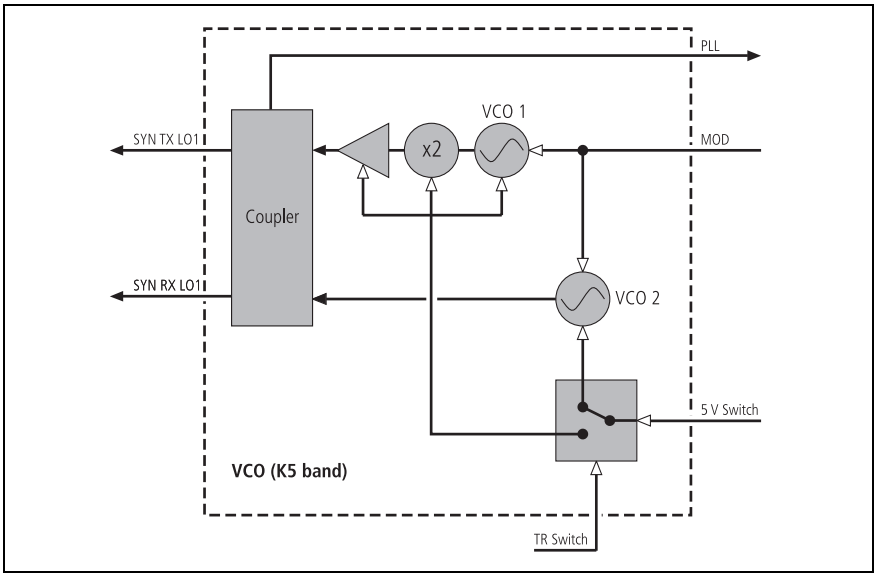

Re-tuning of VCO Frequency

When the radio changes channels or switches between receive and transmit, the VCO frequency must be changed. The rate at which the VCO is re-tuned is dependent on many factors, of which the loop filter is the main factor. The loop filter is an integrator built around an operational amplifier. The resistors and capacitors of the filter affect both the switching time and the stability of the synthesizer; the values of these components have been carefully selected to give optimum control characteristics.

© Tait Electronics Limited November 2007

Speed-up Techniques

To reduce the change-over time between transmit and receive, part-time speed-up techniques have been implemented. Speed-up involves changing some resistor values while simultaneously changing the PLL IC settings. This process is implemented in hardware under software control in conjunction with use of the synthesized reference input. The result is a transmit-receive settling time of less than 4.5ms. (The switching time is measured for a frequency change equal to the first IF plus 10MHz or 1MHz, depending on the repeater offsets used for the band. This implies a synthesizer transmit-receive change-over plus an offset of 1MHz or 10MHz in less than 4.5ms. The ramp-up and ramp-down of the transmitter, which totals 1ms, extends this change-over time to 5.5ms.)

© Tait Electronics Limited November 2007

3.4 Frequency Control Loop

Introduction

The FCL is included in the block diagram of the frequency synthesizer (see Figure 3.5 and Figure 3.6).

The FCL forms part of the frequency-synthesizer module. The basis of the FCL is a VCXO, which generates the reference frequency required by the main PLL of the synthesizer.

Elements of FCL Circuitry

The FCL is a simple frequency-locked loop. The circuitry consists of the following elements:

- VCXO (XL501, Q501, Q503)
- TCXO (XL500)
- buffer amplifier (IC500)
- mixer (IC501)
- low-pass filter (IC502, pins 5 to 7)
- modulator buffer amplifier (IC502, pins 1 to 3).

The A4 band has additional circuitry:

- 2.612MHz mixer (IC506)
- amplifiers (Q504, IC509)
- TCXO divide by 4 (IC508)

The TCXO supplies a reference frequency of 13.0000MHz (10.4MHz for the A4 band), which is extremely stable, regardless of the temperature. The VCXO runs at a nominal frequency of 13.0120MHz, and is frequency-locked to the TCXO reference frequency.

Circuit Operation

The VCXO is mixed with the TCXO output to create a nominal difference (or offset) frequency of 12kHz `SYN CDC FCL`. In A4 band radios, there is additional circuitry and the VCXO is mixed with the TCXO to produce 2.612MHz. This is then mixed with 2.6MHz (TCXO divided by 4) to produce the 12kHz `SYN CDC FCL`.

The signal `SYN CDC FCL` is fed via the CODEC IC502 in the CODEC circuitry to the FPGA on the digital board. The FPGA detects the offset frequency, compares it with the programmed offset frequency, and outputs a corresponding feedback signal `CDC VCXO MOD` via IC205. The feedback signal is amplified and inverted by the modulator buffer amplifier and output as the loop voltage for the VCXO. With this design the VCXO frequency can be adjusted by very small precise amounts, and because the loop is locked, the VCXO inherits the temperature stability of the TCXO.

Modulation

The FCL modulation is implemented within the FPGA and appears at the output of IC205, and therefore on the VCXO loop voltage. Consequently, the VCXO is frequency modulated directly by the relevant modulation information. The latter may be the microphone audio, an audio tap-in signal, internal modem signals, or any combination of these.

© Tait Electronics Limited November 2007

3.5 CODEC and Audio Circuitry

Introduction

For a block diagram of the CODEC and audio circuitry, refer to Figure 3.8.

A/D and D/A Conversion

The analog-to-digital conversion and digital-to-analog conversion is performed by the devices IC203, IC204 and IC205.

Device IC203

IC203 is an eight-channel DAC that provides control of transmitter biasing, front-end AGC, front-end tuning, and the output of analog RSSI signals. The digital input data are fed to IC203 in synchronous serial form. Three of the DAC channels are not used.

Device IC205

IC205 contains two CODECs. One is used by the FCL. The second is used for auxiliary audio (input) and VCO modulation (output). The digital section communicates with this device via a four-wire synchronous serial interface.

Device IC204

IC204 contains base-band, voice-band and auxiliary CODECs and some analog signal conditioning. The reference voltage (nominally 1.2V) for these CODECs is provided internally by IC204 but is decoupled externally by C228.

Base-band CODEC

The base-band CODEC handles the I and Q outputs (IRXP, IRXN, QRXP and QRXN balls) of the receiver's second IF stage. The analog signals are differential and biased at 1.2V nominally. The digital section communicates with this CODEC via a two-wire synchronous serial interface (BSDO and BSOFS balls). The digital-to-analog conversion section of the base-band CODEC is not used.

Voice-band CODEC

The voice-band CODEC handles the microphone and speaker signals. The digital section communicates with this CODEC via a three-wire synchronous serial interface (VSFS, VSDO and VSDI balls). IC204 also contains voice-band filtering, pre-amplification and volume control.

Auxiliary CODEC

The auxiliary CODEC handles transmitter power control, receiver gain control, auxiliary audio output and general analog monitoring functions. The digital section communicates with this CODEC via a three-wire synchronous serial interface (ASFS, ASDI and ASDO balls). The DAC used for receiver gain control (IDACOUT ball) is a current output type. Current-to-voltage conversion is performed by R238. The full-scale output of 1.2V is amplified by IC201 to approximately 3V as required by the receiver.

Audio Circuitry

The audio circuitry performs four functions:

- output of audio signal for speaker
- input of microphone audio signal
- input of auxiliary audio signal
- output of auxiliary audio signal.

The sections of the circuitry concerned with these functions are described in the following sections.

© Tait Electronics Limited November 2007

Figure 3.8 Block diagram of the CODEC and audio circuitry

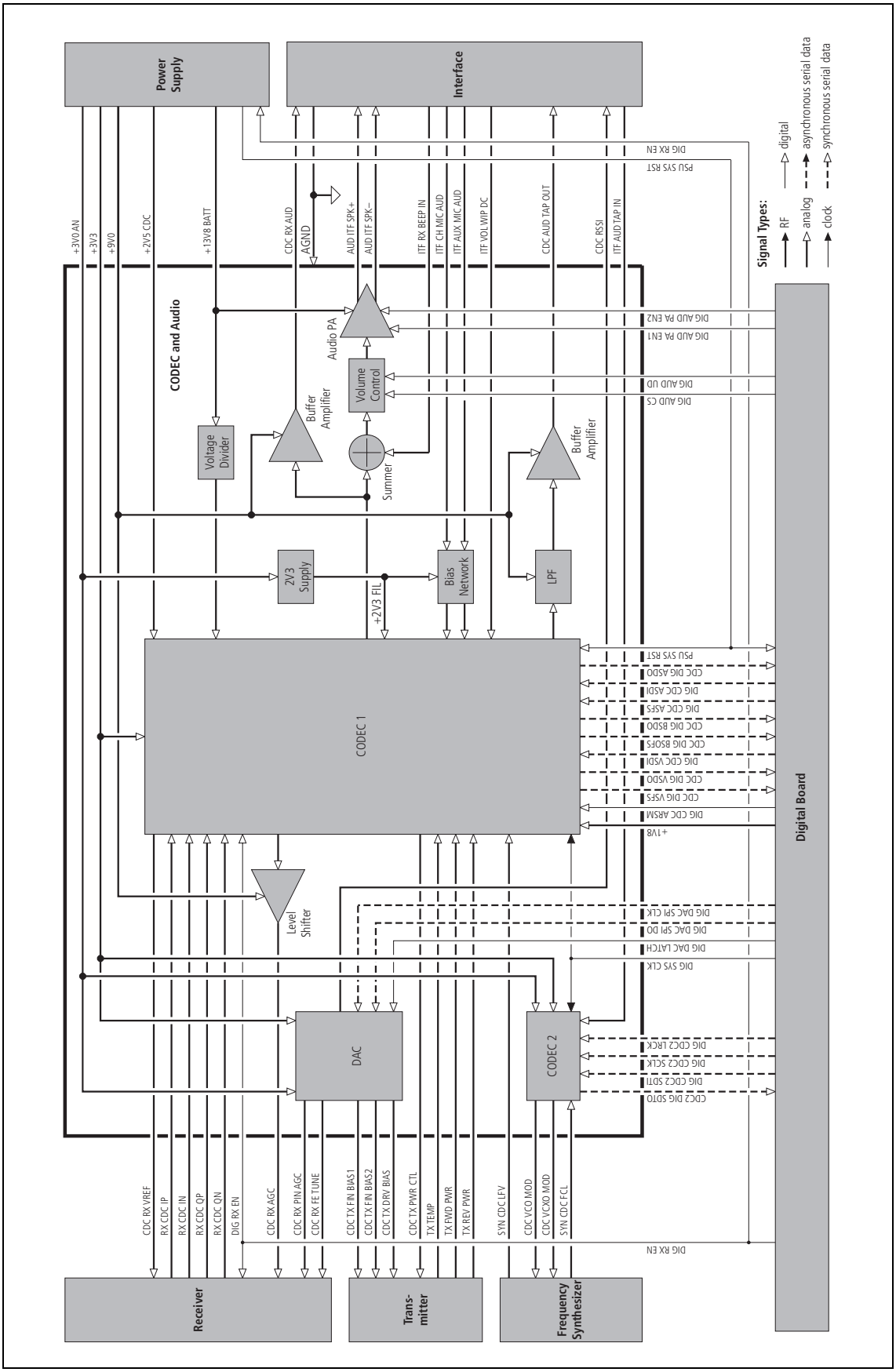

© Tait Electronics Limited November 2007

Audio Signal for Speaker

The audio signal for the speaker is generated by IC204 (VOUTAUXP ball). This signal is post-volume-control and has a pre-emphasized frequency response. The signal is then processed by R218, R217 and C231 (C205) to restore a flat frequency response and reduce the signal level to that required by the audio power amplifier.

Summing Circuit

The top of C231 (C205) is where side tones are summed in and the CDC RX AUD signal is obtained. C201 and R211 pre-emphasize and attenuate the side-tone signal to give a flat side-tone frequency response and reduce the input to an appropriate level.

Buffer Amplifier

IC201 (pins 8 to 10) amplifies the signal at the top of C231 (C205) by 19 dB and drives the CDC RX AUD system interface line via C212 and R225. The capacitor C212 provides AC output coupling and R225 ensures stability. The DC bias for this amplifier is derived from IC204.

Audio Power Amplifier

The signal at the top of C231 (C205) is fed via C204 to the audio power amplifier IC202. IC202 has 46 dB of gain and a differential output configuration. C209, C211, R252 and R253 ensure stability of the amplifier at high frequencies. When operational, the output bias voltage for IC202 is approximately half the radio supply voltage. When not operational, the output becomes high impedance.

Control of Audio Power Amplifier

Power up, power down, and muting of IC202 is controlled by two signals from the digital section, DIG AUD PA EN1 and DIG AUD PA EN2. The network consisting of Q200, Q201, R200 to R206, R210 and R250 converts the two digital signals to the single three-level analog signal required by IC202.

Microphone Signals

There are two microphone source signals:

- ITF AUX MIC AUD from auxiliary or internal options connector
- ITF CH MIC AUD from control head.

The biasing for electret microphones is provided by a filtered 3.0 V supply via R226 and R227. The components R209 and C202 provide the supply filtering. The microphone inputs to IC204 (VINAUXP, VINAUXN, VINNORP, and VINNORN balls) are differential. The negative inputs are decoupled to the filtered 3.0 V supply by C215 and C216. The positive inputs are biased to approximately 1.5 V by R229, R232, R230 and R233. AC coupling and DC input protection is provided by C213 and C214.

Auxiliary Audio Input

The auxiliary audio input signal ITF AUD TAP IN is DC-coupled to the ADC input of IC205. R241 combined with internal clamping diodes in IC205 provide DC protection for the ADC input. IC205 provides the input biasing of approximately 1.5 V.

© Tait Electronics Limited November 2007

Auxiliary Audio Output

The source for the auxiliary audio output signal CDC AUD TAP OUT is provided by IC204 (RAMPDAC ball). The DAC output of IC204 is low-pass filtered to remove high-frequency artefacts. The low-pass filter, formed by IC201 (pins 1 to 3), R219, R220, R221, R224, C206, C208 and C210, is a third-order Butterworth type with a cut frequency of approximately 12kHz. The output of the low-pass filter is amplified by 6dB by a buffer amplifier, IC201 (pins 5 to 7), and fed via R207 and R208 to drive the CDC AUD TAP OUT interface line. The DC bias for this signal path is provided by IC204 and is approximately 1.2V when operational. The offset at CDC AUD TAP OUT is approximately 2.4V owing to the gain of the buffer amplifier.

© Tait Electronics Limited November 2007

3.6 Power Supply Circuitry

Introduction

For a block diagram of the power supply circuitry, refer to Figure 3.9.

The power-supply circuitry consists of the following main sections:

- supply protection
- supervisory circuit
- internal power supplies
- control of internal power supplies
- control of external power supply.

Supply Protection

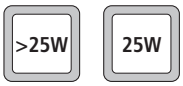

Electrical protection to the radio is provided by the clamping diode D600 and by 20A fuses (for >25W radios) and 10A fuses (for 25W radios) in the positive and negative leads of the power cable. This provides protection from reverse voltages, positive transients greater than 30V, and all negative transients. An ADC monitors the supply and is responsible for the protection of internal devices, which have an operating voltage of less than 30V. The ADC also ensures protection if the radio operates outside its specified voltage range of 10.8V to 16V.

Supervisory Circuit

The supervisory circuit comprises a reset and watchdog timer. The circuit provides the reset signal PSU SYS RST to the digital section, which in turn provides the watchdog signal DIG WD KICK required by the supervisory circuit.

Internal Power Supplies

There are eight internal power supplies:

- one SMPS (+3V3)
- four linear regulators (+9V0, +6V0, +3V0 AN, +2V5 CDC)
- three switched supplies (+9V0 TX, +3V0 RX, +13V8 SW).

The SMPS is used to regulate to 3.3V from the external supply +13V8 BATT. The four lower voltages required are then further stepped down with linear regulators. These all take advantage of the efficiency gain of the SMPS. The 9V regulator and the 13.8V switched supply are connected to +13V8 BATT. The two remaining switched supplies (9V and 3V) use P-channel MOSFETs.

Control of Internal Power Supplies

The radio can be switched on using the ON/OFF key on the control head or by means of external signals. For the latter case hardware links are required and there are several power-sense options; these are discussed below. Some internal power supplies can be controlled by means of digital lines depending on the mode in which the radio is operating.

Power-Sense Options

The radio allows the configuration of different power-sense options to control how the radio is powered up and down:

- battery power sense
- auxiliary power sense (ignition sense)
- internal-options power sense
- no power sense
- emergency power sense.

© Tait Electronics Limited November 2007

Figure 3.9 Block diagram of the power supply circuitry

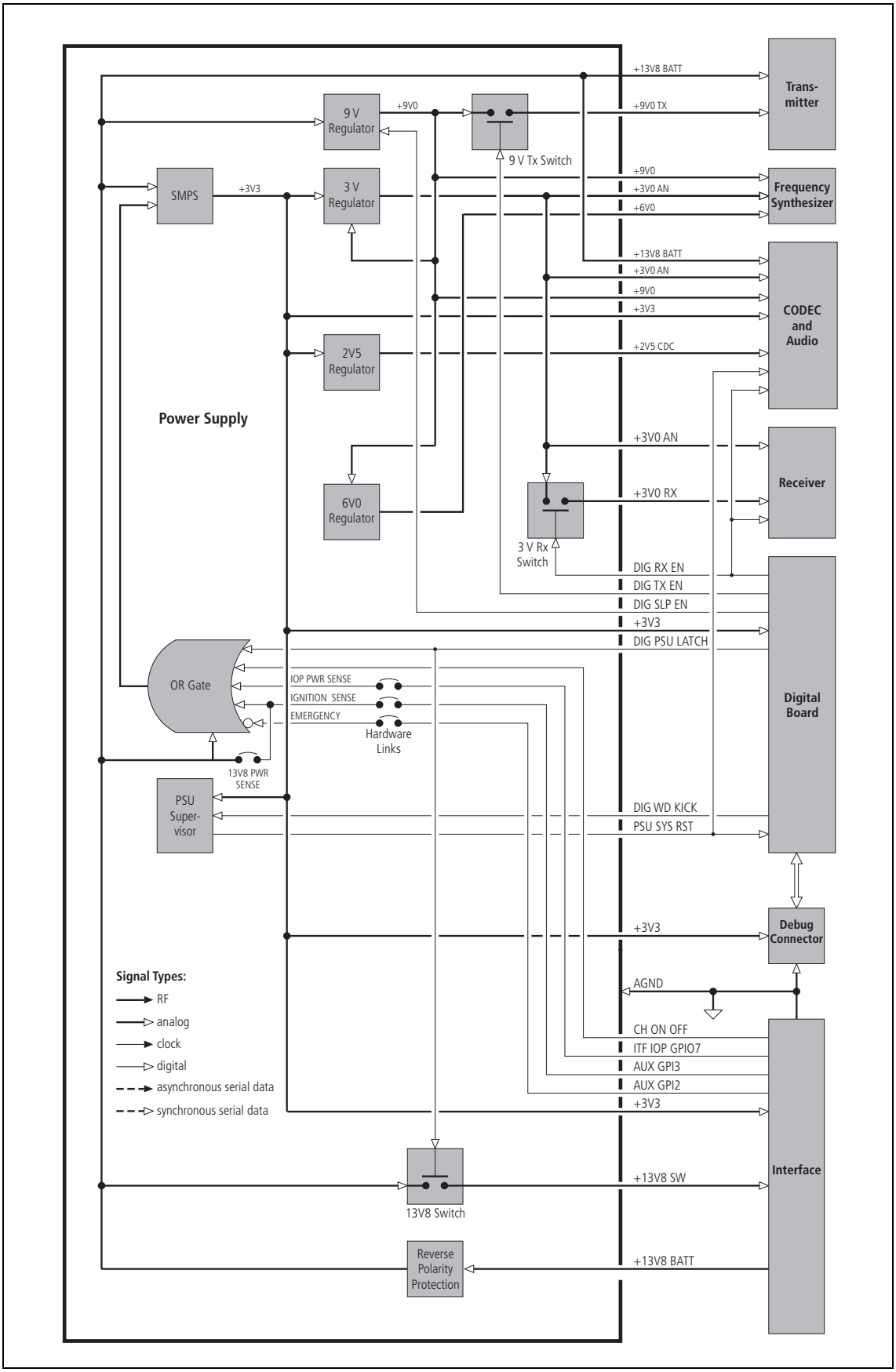

© Tait Electronics Limited November 2007

The emergency power-sense option can be used in conjunction with any of the other four options.

The different power-sense options have to be facilitated by hardware means, as the software cannot act before it is powered up. The radio provides four hardware links (LK1 to LK4) on the top-side of the main board which can be configured to attain the power-sense option desired.

Figure 3.10 shows a block diagram of the hardware links LK1 to LK4.

Figure 3.10 Block diagram of hardware links LK1 to LK4

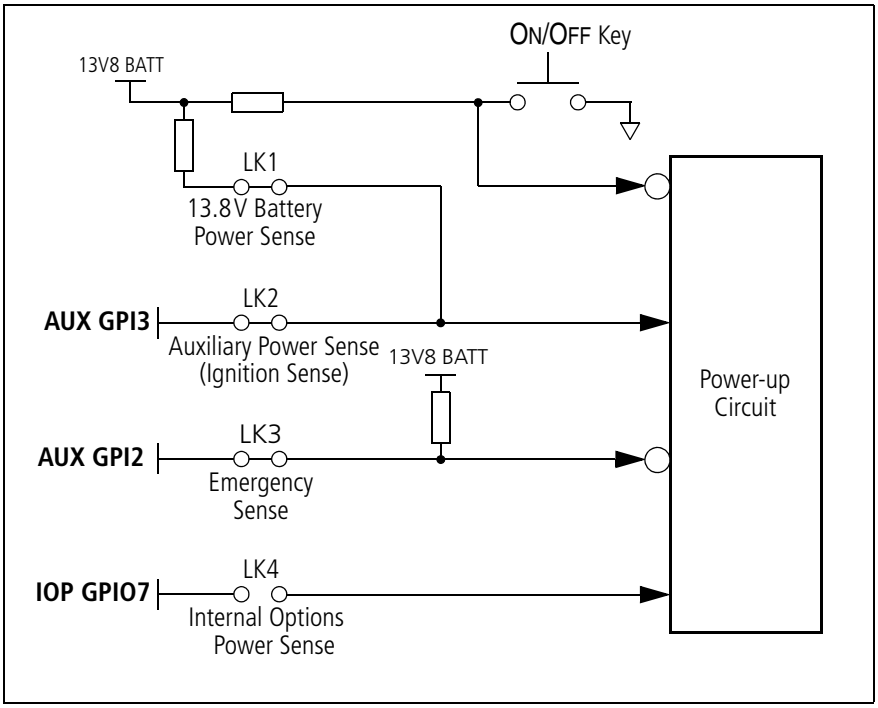

The radio can be programmed to be either on, or to return to its previous state when the power sense signal is removed. For information on programming the power-on mode refer to the online help of the programming software.

The ON/OFF key can be used with any of the of the power-sense options to turn the radio on and off.

© Tait Electronics Limited November 2007

Table 3.2 shows the configuration of the hardware links LK1, LK2 and LK4 for the individual power-sense options. It also lists the dependence of the power-sense options with respect to the GPI lines, which can or cannot be used.

Table 3.2 Configuration of hardware links and GPI lines for power-sense options

Power-sense option	Links required	Configuration of remaining links and use of AUX GPI3 and IOP GPIO7	Voltages required
13.8V battery power sense	LK1 in LK4 out	LK2 in: AUX GPI3 must be left floating. LK2 out: AUX GPI3 can be used as GPI[a]. IOP GPIO7 can be used as GPIO.	10.8V≤ supply≤16V
auxiliary power sense (ignition sense)	LK2 in LK4 out	LK1 in: Input line must sink >1mA from AUX GPI3 (which is pulled to 13.8V by a 33kΩ resistor). The impedance between the vehicle ignition signal and ground must be ≤1kΩ. LK1 out: Input line must be active high[b]. IOP GPIO7 can be used as GPIO.	AUX GPI3≤0.7V off AUX GPI3≥2.6V high (active) ignition-sense tolerant to 3.3V, 5V and 12V
internal power sense	LK1 out LK2 out LK4 in	 AUX GPI3 can be used as GPI. With LK4 in, the input line must be active high[c].	IOP GPIO7≤0.7V off IOP GPIO7≥2.6V high (active) ignition-sense tolerant to 3.3V and 5V only
no power sense	LK1 out LK2 out LK4 out	 AUX GPI3 can be used as GPI. IOP GPIO7 can be used as GPIO.	10.8V≤ supply≤16V

a. If LK2 is out and AUX GPIO is not used, R775 (33k) should be placed to ensure that AUX GPI3 does not float (R775 is not placed by factory default).

b. If LK1 is out and R775 is placed, AUX GPI3 should be driven low as well.

c. If LK 4 is in and R723 is placed, IOP GPIO7 should be driven low as well. (R723 is placed by factory default.)

Table 3.3 shows the configuration of 'emergency power sense'. 'Emergency power sense' can be configured with any of the above power sense options.

Table 3.3 Configuration of hardware link LK3 and AUX GPI2 for 'emergency power sense'

External push-button or toggle switch required to enter emergency mode	Links required	Implications on AUX GPI2	Voltages required
Yes	LK3 in	AUX GPI2 must be connected to an external (hidden) push-button or toggle switch, which connects it to ground.	≤0.7V active, floating inactive
No	LK3 in LK3 out	AUX GPI2 must be left floating AUX GPI2 can be used as GPI.	

© Tait Electronics Limited November 2007

Battery Power Sense

With this option, link LK1 connects +13V8 BATT of the power connector to the power-up circuitry. With this option, when a 13.8 V supply is connected to the radio, the radio enters the programmed power-on mode. The ON/OFF key can then be used to switch the radio on and off. This option has the disadvantage that the radio still draws about 50 mA after being switched off using the ON/OFF key. The reason is that the radio enters the stand-by mode and does not shut down completely.

Auxiliary Power Sense (Ignition Sense)

This option uses the digital input line AUX GPI3 of the auxiliary connector to power the radio up and down. Link LK2 is required to connect the line to the power-up circuitry. The line is active high; it is on when the level exceeds 2.6 V and off when the level falls below 0.7 V; the line tolerates maximum inputs equal to the radio supply voltage. When the line becomes active, the radio enters the programmed power-on mode. The ON/OFF key can then be used to switch the radio on and off. With the radio off and the line active, the radio draws about 50 mA. When the line becomes inactive, the radio is shut down completely regardless of whether it was on or in stand-by mode. With the line inactive the radio draws less than 1 mA.
In a vehicle installation this avoids flattening the battery when the ignition key is off.

Internal-Options Power Sense

This option is similar to the auxiliary power-sense option, except that the IOP GPIO7 line of the internal options connector is used. Link LK4 is required to connect the line to the power-up circuitry. This line is active high; it is on when the level exceeds 2.6 V and off when the level falls below 0.7 V; the line tolerates maximum inputs of 5 V. The behaviour of the ON/OFF key is the same as with the auxiliary power-sense option.

No Power Sense

If no power-sense option is selected, the radio can only be powered up and powered down by means of the ON/OFF key. For this option, the links LK1, LK2 and LK4 must be removed. The advantage of this option over the battery power-sense option is that the radio draws less than 1 mA when it is switched off.

Emergency Power Sense

This option uses the AUX GPI2 line of the auxiliary connector. Externally, this line is typically connected to a hidden switch. Internally, link LK3 is required to connect the line to the power-up circuitry. The line is active low and has an internal pull-up resistor to the external supply voltage. The line is on when the level falls below 0.7 V. When the line becomes active (when the hidden switch is pressed for two seconds) the radio enters the emergency mode. This mode can also be activated by making an emergency call or by pressing a key that has been programmed appropriately. The concealed microphone is typically fitted when the emergency power-sense option is selected.

Operation in Emergency Mode

If the radio is off when the emergency mode is activated, the radio is powered up but the display on the control head is not switched on. If the radio is on when the mode is activated, the display is frozen. In the latter case, if the ON/OFF key is pressed, the display is switched off but the radio remains in the emergency mode. While in this mode the radio cycles between transmit and receive. To exit the emergency mode, the ON/OFF key needs to be pressed again.

© Tait Electronics Limited November 2007

Connector Power Supply Options

Power from the radio's primary power source is fed to the auxiliary, internal options, control head and microphone connectors. Whether power to these connectors is unswitched, switched or not supplied is determined by hardware links LK5 to LK8 on the top side of the main board, as shown in Figure 3.11 and Table 3.4.

Unswitched power means that power will always be supplied to the connector while the primary power source is connected to the radio and is alive. The supply to the connector is not affected by the state of the radio.

Switched power means that when the radio is off or in standby mode, the power to the connector is switched off. The power will also be switched off if the primary power source voltage is outside the radio's operating range. The combined switched current drawn by the internal options connector, the auxiliary connector and the control-head connector must not exceed 1 A.

Note The switched output is protected. Short-circuiting the switched power on any connector will not damage the radio. In the event of a short circuit, the current folds back to protect the switch device and connectors.

Figure 3.11 Connector power supply options

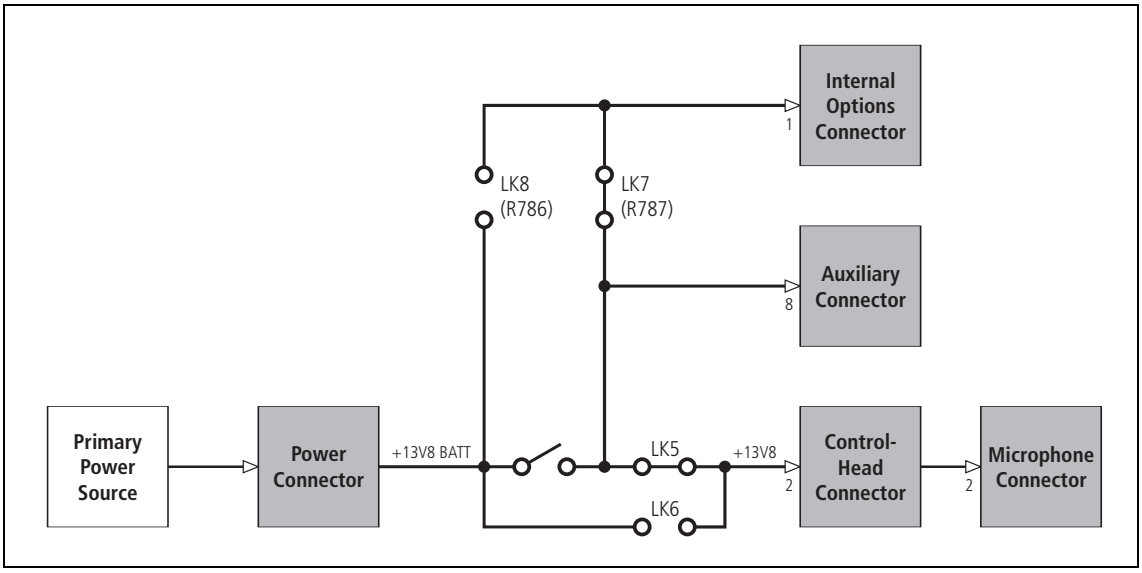

Note The links LK7 and LK8 have the alternative designations R787 and R786 respectively. The factory-default setting is with LK5 and LK7 inserted and LK6 and LK8 omitted.

3.7 Interface Circuitry

Introduction

For a block diagram of the interfaces circuitry, refer to Figure 3.12.

For more on the connector pinouts, refer to "Connectors" on page 38.

© Tait Electronics Limited November 2007

Table 3.4 Connector power supply options

Link state				Connector power state			
LK5	**LK6**	**LK7 (R787)**	**LK8 (R786)**	**Auxiliary**	**Internal options**	**Control head**	**Microphone**
out	out	out	out	switched	no power	no power	no power
in	out	in	out	switched	switched	switched	switched
out	in	in	out	switched	switched	unswitched	unswitched
in	out	out	in	switched	unswitched	switched	switched
out	in	out	in	switched	unswitched	unswitched	unswitched
in	in/out	in	in	unswitched	unswitched	unswitched	unswitched

Bi-directional Lines

Bi-directional lines are provided on four pins of the auxiliary connector, (AUX GPIO4 to AUX GPIO7) one on the control-head connector (CH GPIO1), and seven on the internal options connector (IOP GPIO1 to IOP GPIO7). Those on the auxiliary and control-head connectors are formed by combining two uni-directional lines. For example, the line AUX GPIO4 at pin 10 of the auxiliary connector is formed from ITF AUX GPI4 and DIG AUX GPO4.
The circuitry is the same in all five cases and is explained below for the case of AUX GPIO4.

Output Signals (e.g. AUX GPIO4)

An output on the line AUX GPIO4 originates as the 3.3V signal DIG AUX GPO4 from the digital section. The signal is first inverted by Q703 (pins 3 to 5) and the output divided down to 1.6V by R748 and R753 to drive the base of Q703 (pins 1, 2 and 6). When the latter's collector current is low, the base current is a maximum and creates a small voltage drop across R761, causing the collector emitter to saturate. As the collector current increases, the base current decreases proportionally until the voltage across R761 reaches 1V. At this point the base-emitter begins to turn off and the base current diminishes rapidly. The net effect is a current-limiting action. The current limit value is approximately 18mA (the inverse of the value of R761).
The output configuration is open-collector with a pull-up to 3.3V by default. Pull-up options to 5V and 13.8V are also available. On AUX GPIO4 only, the optional MOSFET Q707, which has a high current drive, may be fitted. If Q707 is fitted, R768 must be removed.

5-Volt Regulator

The 5V supply mentioned above is provided by a simple buffered zener regulator formed by Q702, D721, R721 and R722. The resistor R722 limits the current to about 25mA under short-circuit conditions.

Input Signals (e.g. AUX GPIO4)

An input signal applied to AUX GPIO4 is coupled via R757 to ITF AUX GPI4 and fed to the digital section. As the input signal may exceed the maximum allowed by the digital section, it is clamped by D711 and a shunt regulator. The shunt regulator consists of Q708, R719 and R720 and begins to turn on at approximately 2.7V. In combination with D711, the input to ITF AUX GPI4 is therefore clamped to 3.3V nominally. The value of R757 is made large to minimize the loading effect on the output pull-up resistors.

© Tait Electronics Limited November 2007

Figure 3.12 Block diagram of the interface circuitry

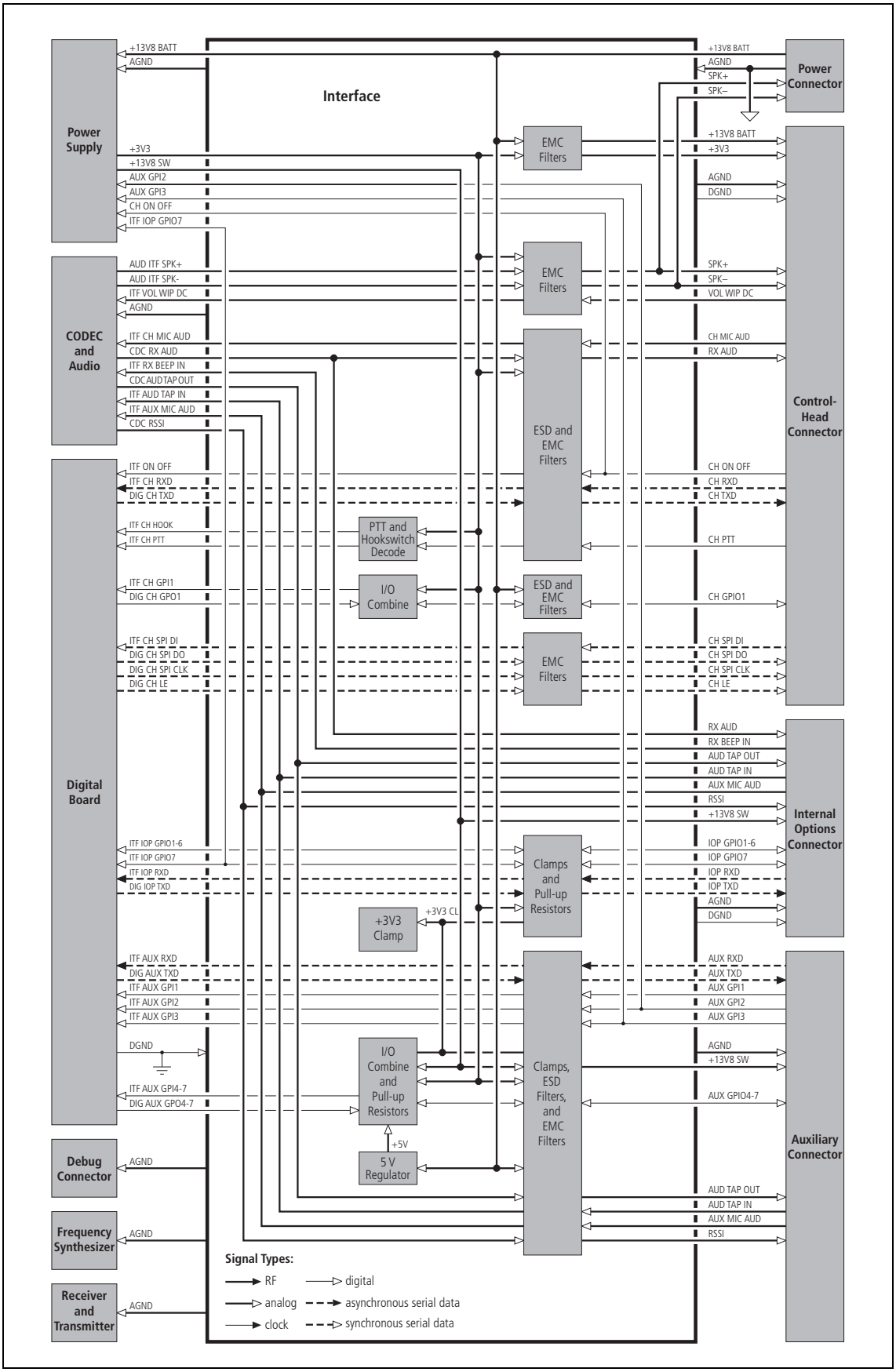

© Tait Electronics Limited November 2007

Input Signals (AUX GPI1 to AUX GPI3)

Dedicated inputs are provided on three pins of the auxiliary connector (AUX GPI1 to AUX GPI3). AUX GPI1 is a general-purpose input with strong protection of the same type used for AUX GPIO4. AUX GPI2 is normally a dedicated emergency input but can be made a general-purpose input like AUX GPI1 by removing the link LK3 in the power supply area. AUX GPI3 is normally a dedicated ignition-sense input but can be made a general-purpose input like AUX GPI1 by removing the link LK2 in the power supply area and fitting the 33kΩ resistor R775.

ESD Protection

On exposed inputs of the auxiliary and control-head connectors ESD (electrostatic discharge) protection is provided by a 470pF capacitor and by clamping diodes to ground and to 13.8V. For example, on AUX GPIO4 this consists of D713 and C725. The lines IOP GPIO1 to IOP GPIO7 are intended for connection to internal digital devices and so these have relatively light protection.

Hookswitch Detection

Hookswitch detection is performed by Q700, R709, R706 and R712. When the resistance to ground on the PTT line is less than 13.2kΩ, Q700 will turn on and drive the ITF CH HOOK line high; this indicates either that the microphone is on hook or that the PTT (press-to-talk) switch is pressed.

3.8 Digital Board

Introduction

Different digital boards are used for the TM8200 and TM8100 radios. For a block diagram of the digital board of the TM8200 radios, refer to Figure 3.13. For a block diagram of the digital board of the TM8100 radios, refer to Figure 3.14.

The digital board is not serviceable at level-2 and is not described in this manual.

© Tait Electronics Limited November 2007

Figure 3.13 Block diagram of the digital board (TM8200 radios)

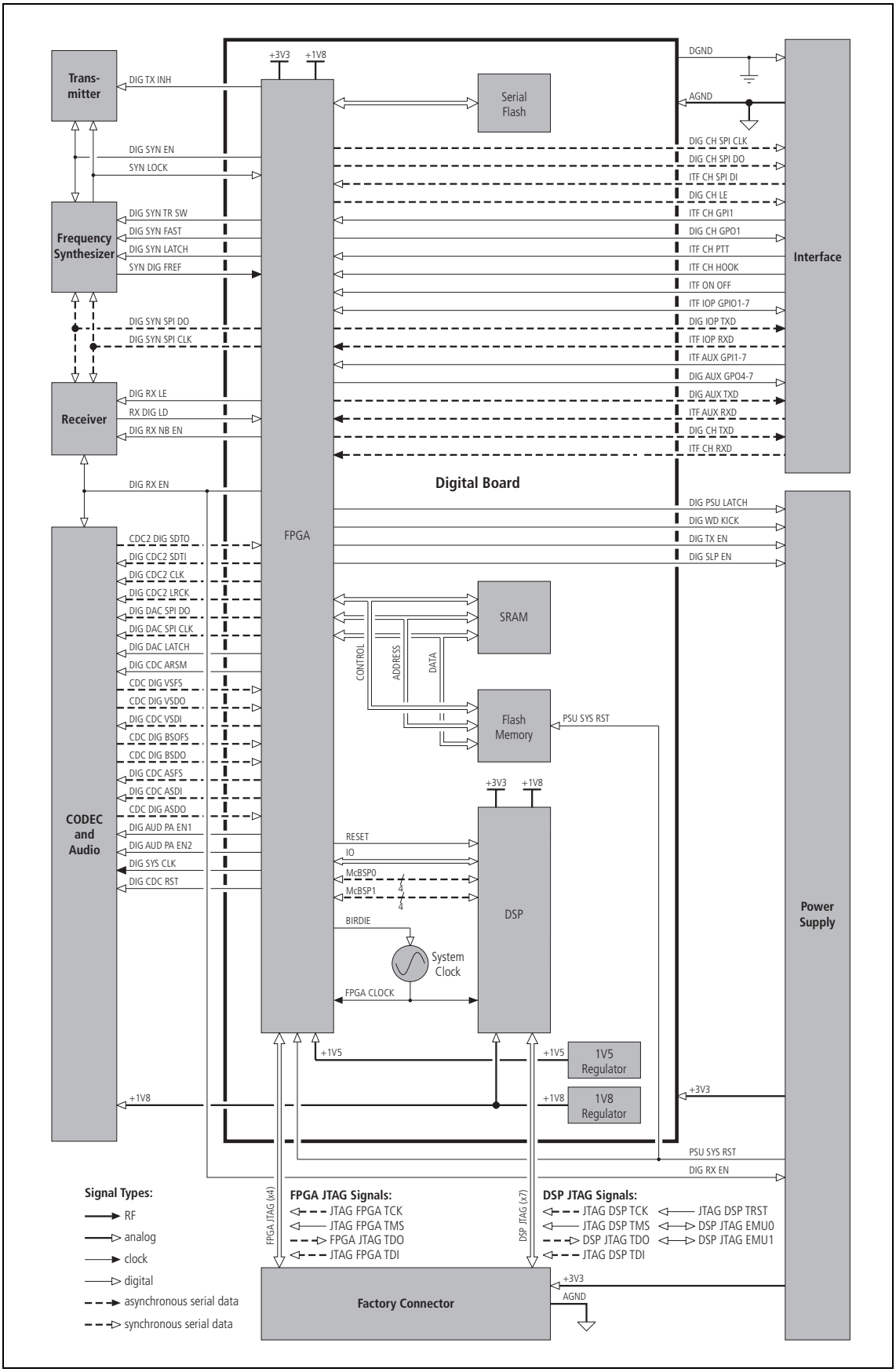

© Tait Electronics Limited November 2007

Figure 3.14 Block diagram of the digital board (TM8100 radios)

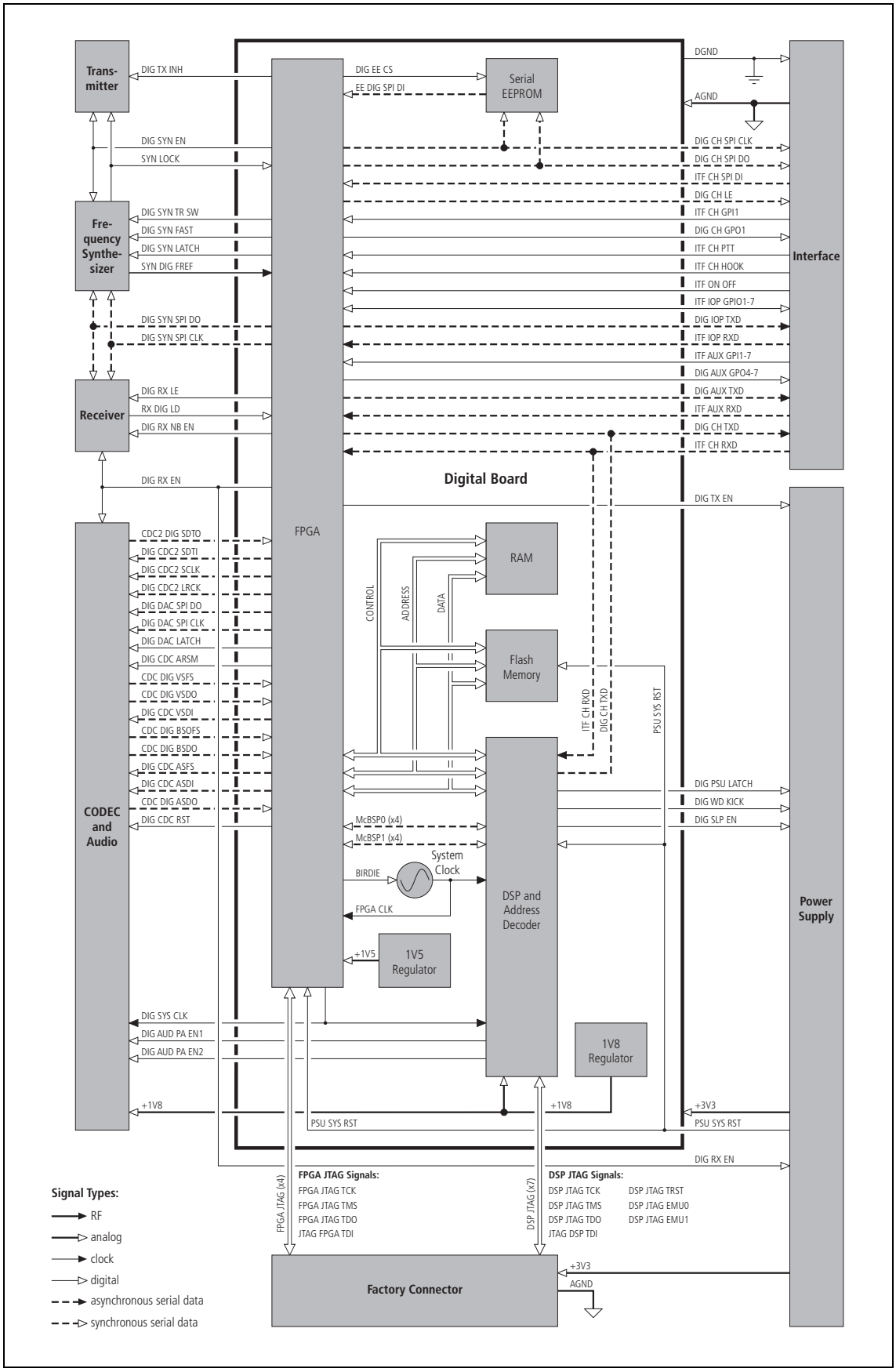

3.9 Control-Head Board with Graphical Display

Introduction

This section describes the control-head board for the control head with graphical display.

For a block diagram of the digital circuitry, refer to Figure 3.15.

Most signals (except power on/off, speaker and microphone) to and from the radio body are processed by a RISC processor, which is implemented on an FPGA on the control-head board. For more information on the RISC processor and the FPGA, refer to "Software Architecture" on page 49.

User Interface

The control-head board includes the circuitry for the following control elements:

- ON/OFF key
- volume potentiometer
- main keypad (with four functions keys, two scroll keys and two selection keys)
- LCD module (with backlighting and optional heating element)
- three status LEDs
- two function key LEDs (for function keys F1 and F4)
- keypad backlighting LEDs
- speaker.

Connectors

The control-head board includes the circuitry for the following connectors:

- microphone connector (RJ45 socket)
- control-head connector (18-way MicroMaTch socket)
- LCD connector (for internal connection of LCD module)
- speaker connector (2 leads)
- soldering pads (2 leads) for an optional concealed microphone
- control-head options connector (for optional circuit board).

Protection circuitry is provided for the microphone connector. For pinouts of the control-head connector and the microphone connector, refer to "Connectors" on page 38. For more information on the control-head options connector, please contact Tait Electronics Limited.

ON/OFF Key

When battery power (13.8V) is applied to the radio, a press of the ON/OFF key will create an active low signal (CH ON OFF) back to the radio body to initiate the power-on or power-off sequence. This key-press will also be detected by the FPGA of the control head through Q611 as an active high signal. For more information on the start-up process, refer to "Software Architecture" on page 49.

© Tait Electronics Limited November 2007

Figure 3.15 Block diagram of the control-head board with graphical display

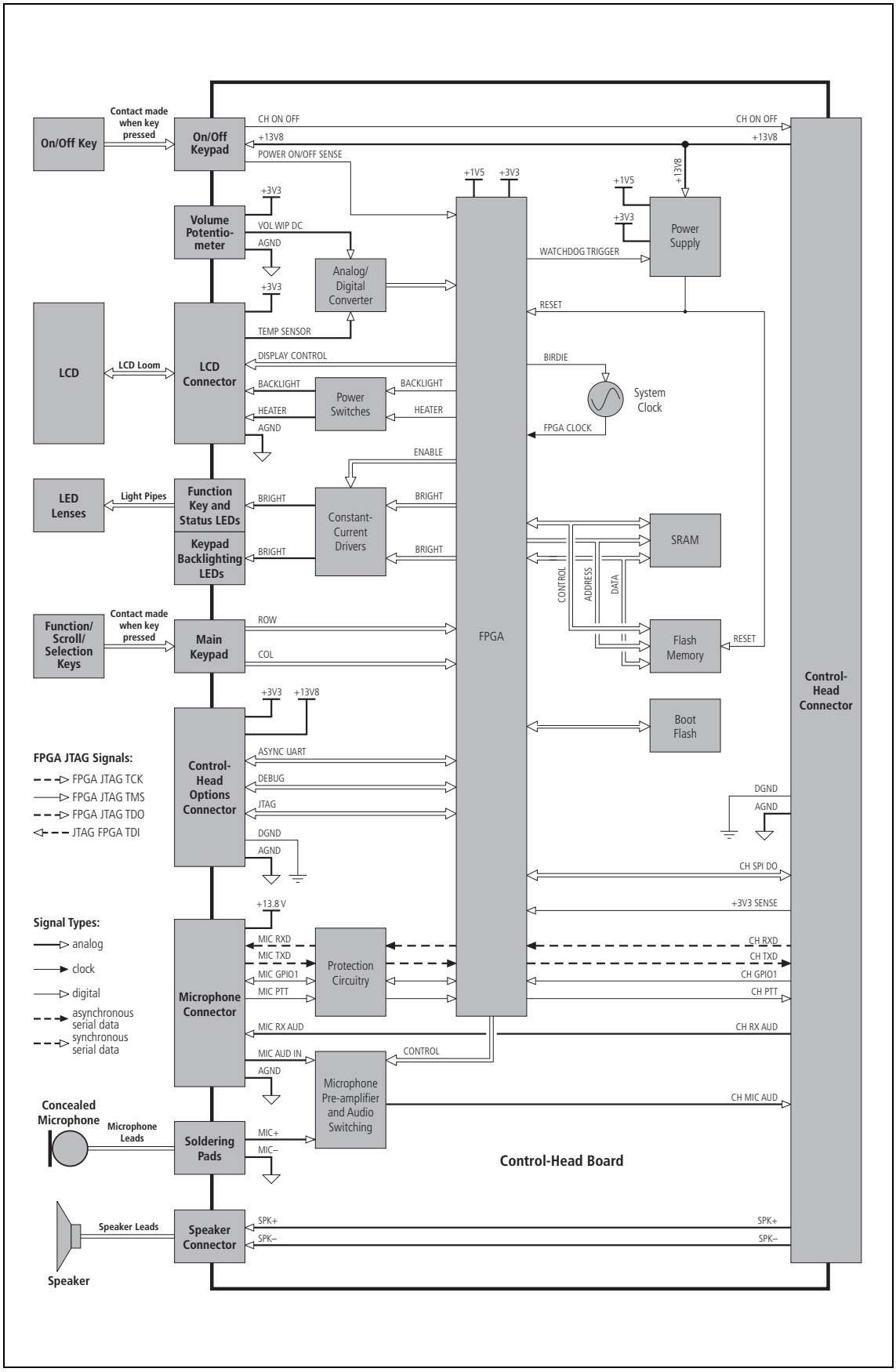

Power Supply

A 3.3V regulator (U1) converts the switched 13.8V supply from the radio body to 3.3V. A 1.5V regulator (U203) converts the 3.3V to 1.5V.
A power-sense module (U202) verifies the outputs of the voltage regulators and—in the case of a fault—creates a power reset signal which is processed by the FPGA.

Volume Control

The voltage level of the volume control potentiometer is converted to a digital signal by an analog/digital converter (U601), processed by the FPGA and transmitted to the radio body.

Main Keypad

The eight keys of the main keypad (function, scroll and selection keys) are connected to the FPGA by an array of 3 columns and 3 rows. During idle operation, the KEY ROW signals are driven low by the FPGA and the KEY COL signals (pulled high by an external resistor) are monitored for activity by the FPGA. A key-press will generate a high-to-low transition on the associated column KEY COL signal. This, in turn, will initiate a sequence of high output levels on the KEY ROW signals to identify which key was pressed.

LCD Module

The LCD module is connected to the control-head board via the LCD connector. The LCD module display is controlled by a serial data link to the FPGA. The backlighting and the optional heating element incorporated in the LCD module are controlled by a data line each from the FPGA, which switch two transistors on MOSFET Q102. A temperature signal from the LCD module is converted to a digital signal by an analog/digital converter (U601) and processed by the FPGA.

Function Key LEDs and Status LEDs

The function key LEDs (F1 and F4) and the red, green and amber status LEDs each are controlled by an FPGA signal and a transistor (Q604 to Q608). The brightness level is controlled by two FPGA signals, resulting in four intensity levels (off, low, medium and high).

Keypad Backlighting

The keypad backlighting LEDs are controlled by two FPGA signals and two transistors (Q2), resulting in four intensity levels (off, low, medium and high). The keypad backlighting LEDs are arranged in two groups for the main keypad and one group for the power button keypad, each group consisting of three LEDs.

Speaker

The two speaker lines (SPK+ and SPK–) are connected to the speaker connector (J104) which is joined to the control-head connector (J103) through two ferrite beads (L105 and L106).

Microphone and Concealed Microphone (Optional)

The audio signals from the microphone connector or the soldering pads of the optional concealed microphone are routed to a switching and pre-amplifier circuit. If a dynamic microphone is required, the pre-amplifier is engaged. The switching logic is used to select either the standard microphone input or the concealed microphone signal. The dynamic microphone must be activated in the programming software.

PTT

The PTT signal from the microphone connector is connected to the FPGA via a resistor (R25) and relayed to the radio as a digital command.

© Tait Electronics Limited November 2007

3.10 Control-Head Board with 1-, 2- or 3-Digit Display

Introduction

This section describes the circuitry of the control-head boards for the control heads with 1-, 2- or 3-digit display. The boards differ in their layouts but the components are virtually identical. The circuit description given below is sufficiently general to be applicable to all boards.

User Interface

The control-head board includes the circuitry for the following control elements:

- ON/OFF key
- volume potentiometer
- keypad (with four functions keys and two scroll keys)
- LCD
- three status LEDs
- four function key LEDs (for function keys F1 to F4)
- keypad backlighting LEDs
- speaker.

Connectors

The control-head board includes the circuitry for the following connectors:

- microphone connector (RJ45 socket)
- control-head connector (18-way MicroMaTch socket)
- speaker connector (2 leads)
- soldering pads (2 leads) for an optional concealed microphone
- two control-head options connectors (for optional circuit board).

Protection circuitry is provided for the microphone connector. For pinouts of the control-head connector and the microphone connector, refer to "Connectors" on page 38. For more information on the control-head options connector, please contact Tait Electronics Limited.

The optional circuit board is installed when a dynamic microphone is used or a concealed microphone is fitted.

Basic Circuitry

The LCD driver is based on IC2, IC5 and IC7. Electrical contact between the control head and the LCD itself is via two elastomeric strips as described in "Control Heads with 1-, 2- or 3-Digit Display" on page 31. There are pads on the board for the seven keys—four function keys, two channel-selection keys, and the ON/OFF key. The device IC4 reads the status of the function and channel-selection keys. Of the 18 LEDs, there are red, orange and green STATUS LEDs, and four green LEDs for the function keys, as well as 11 green LEDs for back-lighting—one for each key and four for the LCD. The four dual switching transistors Q1 to Q4 control the switching of the LEDs; the transistors are driven by IC3.

© Tait Electronics Limited November 2007

Figure 3.16 Block diagram of the control-head board with 1-, 2- or 3-digit display

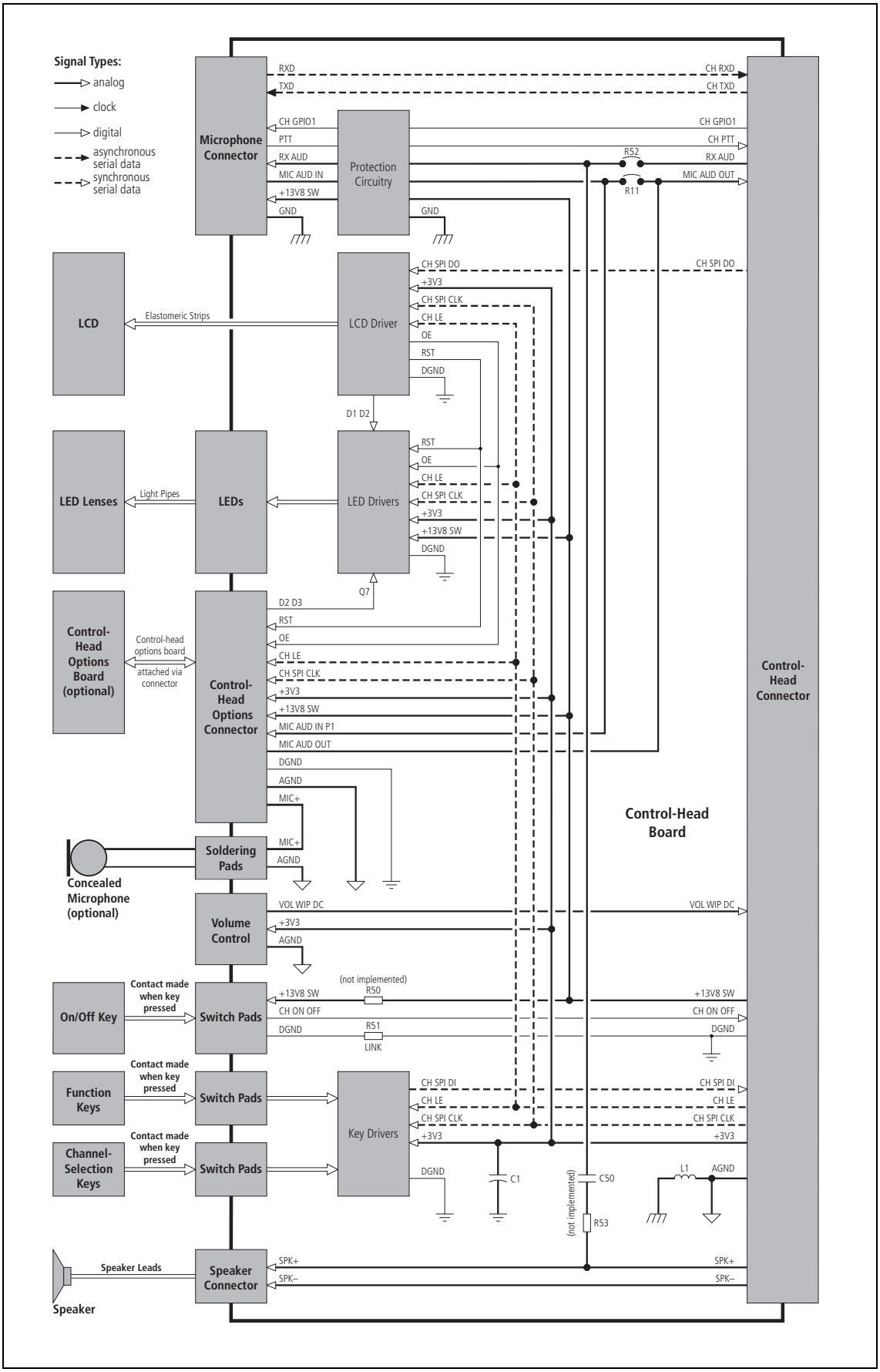

© Tait Electronics Limited November 2007

Serial Peripheral Interface

The control-head board uses an SPI (serial peripheral interface) to control the display on the LCD, turn back-lighting on and off, control the STATUS LEDs, and read the status of the keys. The interface consists of the following four lines at the control-head connector:

- pin 11: data out CH SPI DO
- pin 12: latch line CH LE
- pin 15: data in CH SPI DI
- pin 16: clock CH SPI CLK.

Data Input and Output

Data that are input to the control head are clocked through the LCD driver and daisy-chained to a shift register. Once all the data have been clocked in, the latch line is driven low. On this falling edge all the outputs (LEDs and LCD segments) are driven to their new state. When the latch line is driven high, the state of each key is latched into another shift register. The data are then clocked out back to the radio body so that the radio can respond accordingly.

LCD Driver

An oscillator is used to run the LCD. It oscillates at about 60 Hz and employs a Schmitt trigger and D flip-flop to ensure a 50% duty cycle to the LCD. A reset circuit is required because the reset from the main board is not routed to the control head. The reset circuit also employs a Schmitt trigger.

Volume Control

The volume-control potentiometer is linear and passes the DC voltage signal VOL WIP DC to the radio body. The signal is read by an ADC on the main board, and the volume is adjusted accordingly.

© Tait Electronics Limited November 2007

3.11 RJ45 Control Head

Introduction

This section describes the circuitry of the control-head board for the RJ45 control head.

User Interface

The control-head board includes a POWER ON/OFF LED which indicates whether the radio is switched on or off[1].

Connectors

The control-head board includes the circuitry for the following connectors:

- programming connector (RJ45 socket)
- control-head connector (18-way MicroMaTch socket).

For pinouts of the connectors, refer to "Connectors" on page 38.

Basic Circuitry

The signals of the control-head connector are directly connected to the telemetry connector. The POWER ON/OFF LED is supplied by the +13V8 voltage.

Figure 3.17 Block diagram of the control-head board of the RJ45 control-head

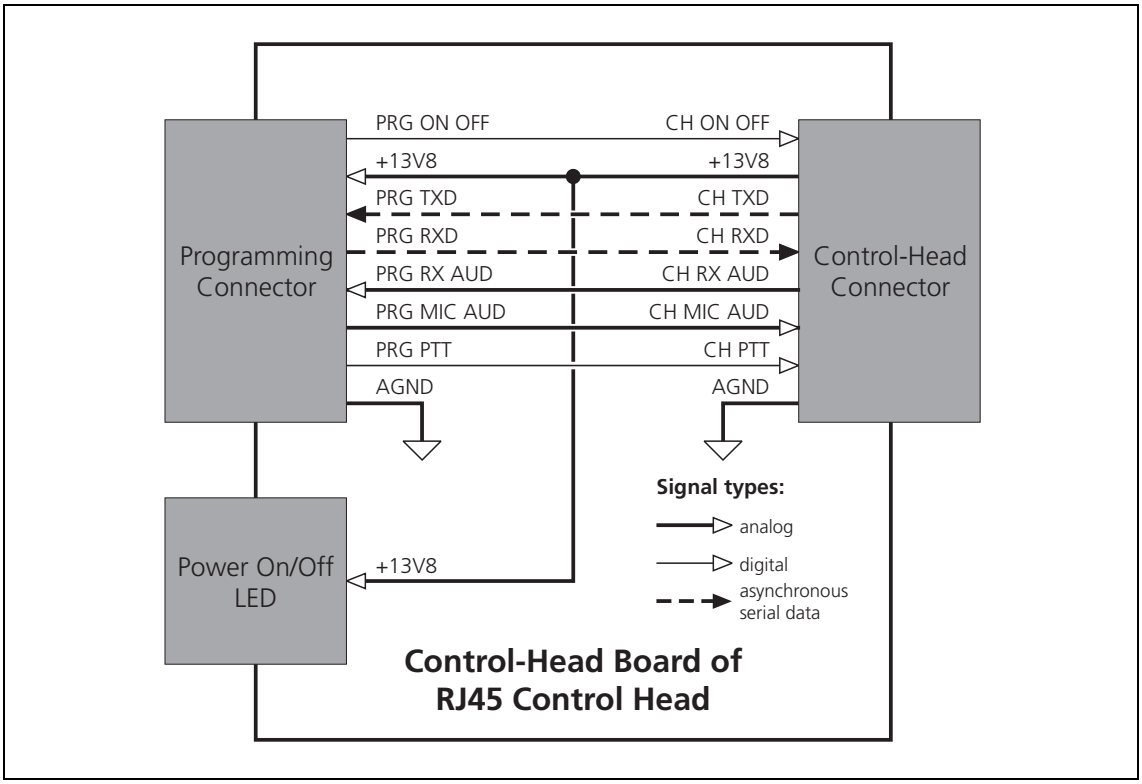

1. The signal supplying the LED can be switched or unswitched. For more information refer to "Connector Power Supply Options" on page 90.

© Tait Electronics Limited November 2007

Part B – Servicing the Radio

4 General Information 107

4.1 Repair Levels, Accreditation, and Website Access 107
4.2 Tools, Equipment and Spares 110
4.3 Servicing Precautions 112
4.4 Setting up the Test Equipment 115
4.5 Replacing Board Components 117
4.6 Shielding Cans and Connectors 119
4.7 SMT Repair Techniques 121
4.8 Computer-Controlled Test Mode (CCTM) 123
4.9 Defining Frequency Bands 131
4.10 Visual and Audible Indications 132

5 Disassembly and Reassembly 135

5.1 Removing and Mounting the Control Head 136
5.2 Disassembling the Radio Body 137
5.3 Reassembling the Radio Body 143
5.4 Disassembling and Reassembling the Control Head 147

6 Servicing Procedures 155

6.1 Initial Tasks 155
6.2 Final Tasks 163

7 Power Supply Fault Finding 169

8 Interface Fault Finding 179

9 Frequency Synthesizer Fault Finding 185

9.1 Initial Checks 186
9.2 Power Supplies 189
9.3 Phase-locked Loop 198
9.4 Loop Filter 204
9.5 Receive VCO and Related Circuitry (UHF Radios) 209
9.6 Transmit VCO and Related Circuitry (UHF and 800 MHz Radios) 218
9.7 VCO and Related Circuitry (VHF Radios) 224
9.8 Power Supply for FCL 234
9.9 VCXO and TCXO Outputs 237
9.10 Signals at TP501 and TP502 240
9.11 VCXO and CODEC Circuitry 244

© Tait Electronics Limited November 2007

10 Receiver Fault Finding 247
10.1 Faulty Receiver Sensitivity 248
10.2 Excessive Loss of Sensitivity. 250
10.3 Moderate or Slight Loss of Sensitivity. 255
10.4 Incorrect RSSI Readings. 259
10.5 Faulty Radio Mute 262
10.6 High Receiver Distortion 265

11 Transmitter Fault Finding (>25 W) 267
11.1 Power Supplies 271
11.2 Transmitter RF Power 278
11.3 Biasing of PA Driver and PAs 290
11.4 RF Signal Path 315

12 Transmitter Fault Finding (25 W) 341
12.1 Power Supplies 344
12.2 Transmitter RF Power 350
12.3 Biasing of PA Driver and PAs 360
12.4 RF Signal Path 379

13 CODEC and Audio Fault Finding 399
13.1 Power Supplies 400
13.2 Faulty Speaker Audio 402
13.3 No Speaker Audio at Auxiliary Connector. 409
13.4 Faulty Receiver 414
13.5 Faulty Modulation 416
13.6 Faulty Modulation Using Auxiliary Connector. 420

14 Fault Finding of Control Head with Graphical Display 423
14.1 CCTM Commands. 424
14.2 Power Supply Faulty. 426
14.3 LCD Display Faulty 428
14.4 LCD Backlighting Faulty. 430
14.5 LCD Heating Faulty 431
14.6 Function Key LEDs or Status LEDs Faulty 432
14.7 Keypad Backlighting Faulty. 434
14.8 On/Off Key Faulty. 436
14.9 Function, Scroll, or Selection Keys Faulty 438
14.10 Speaker Faulty 440
14.11 Volume Control Faulty. 442
14.12 PTT Faulty. 444

© Tait Electronics Limited November 2007

15 Fault Finding of Control Head with 1-, 2- or 3-Digit Display 447
15.1 Display Faulty but not LEDs 450
15.2 Some LEDs Faulty. 451
15.3 All LEDs Faulty. 452
15.4 Display and All LEDs Faulty 452
15.5 Some but not All Keys Faulty 453
15.6 All Keys Faulty 453
15.7 Speaker Faulty. 454
15.8 Volume Control Faulty 454

16 Spare Parts 455

© Tait Electronics Limited November 2007

© Tait Electronics Limited November 2007

4 General Information

This chapter describes techniques and processes, and provides other information that will enable you top service the radio correctly. It includes the following sections:

- Repair Levels, Accreditation, and Website Access
- Tools, Equipment and Spares
- Servicing Precautions
- Setting up the Test Equipment
- Replacing Board Components
- Shielding Cans and Connectors
- SMT Repair Techniques
- Computer-Controlled Test Mode (CCTM)
- Defining Frequency Bands
- Visual and Audible Indications

4.1 Repair Levels, Accreditation, and Website Access

4.1.1 Repair Levels

This manual covers level-1 and level-2 repairs of the radios.

Important The circuit boards in the radio are complex and must be serviced only by an Accredited Service Centre (ASC). See "Accreditation of Service Centres" on page 108. If you attempt a repair without the necessary equipment, tools, or training, you could permanently damage the radio.

Level 1 Requirements

Level-1 repairs comprise the **replacement** of control-head boards, main-board assemblies, and other parts of the radio, including non-SMT components such as connectors and volume-control potentiometer on the control-head board

For level-1 repairs basic electronic repair skills are sufficient.

You require:

- standard service centre tools and equipment
- special drivers and bits, see page 110
- a TM8100/TM8200 service kit, see page 111
- a spare control head (for diagnostic purposes)

© Tait Electronics Limited November 2007

Level 2 Requirements

Level-2 repairs comprise **repairs** of control-head boards and, except for special items, main-board assemblies. The special items are:

- digital board
- RF PAs (Q309 and Q310)
- CODEC 1 (IC204)
- copper plate

Replacements of the connectors on the main-board assembly, are level-2 repairs because these repairs entail the disassembly of the main-board assembly.

For level-2 repairs, you require expertise in SMT repairs of circuit boards with a very high complexity and extreme component density.

You require the tools and equipment required for level-1 repairs, as well as standard SMT repair tools. A can-removal tool is strongly recommended but not mandatory.

4.1.2 Accreditation of Service Centres

Note All existing Accredited Service Centres must apply for an endorsement to work on TM8100/TM8200 radios. When the endorsement is granted, they will be permitted to carry out level 1 and level 2 repairs on the radios, whether the radio is under warranty or not.

If your service centre would like to apply for Accredited Service Centre (ASC) status, please contact Tait Technical Support at the address in the front of this manual. You will need to provide evidence that your centre meets the criteria for accreditation. Any centre applying for accreditation must also:

- make suitable staff available for training by Tait personnel
- allow the service facilities to be assessed
- provide adequate documentation of processes

Once staff are trained and facilities are confirmed as suitable, the centre is granted ASC status and endorsed for repairs. See also "Website Access" below.

4.1.3 Website Access

No password is required for the unsecured area of the website, which is accessible to the general public. To carry out level 1 or level 2 repairs, however, you need to log on to the secured area of the Tait Technical Support website, www.taitworld.com/technical. Technical Support supplies the necessary log-in information. The Single Sign-On feature automatically signs you on with your authorised level of access:

- level 1 repairs require "associate" access
- level 2 repairs require "ASC and Tait-only" access

© Tait Electronics Limited November 2007

The website includes:

- Application Notes
- Calibration Software
- Firmware
- Fitting Instructions
- Installation Guides
- PCB Information
- Programming Software
- Programming User Manuals
- Service Manuals
- Software Release Notes
- Technical Notes
- User's Guides

Product Issue Tracking

Customers and service centres use the Tait Technical Support website to raise and track technical issues. The **Product Issue Tracking** link accesses to the Tait FOCUS call-logging database. Technical Support resolves any issue raised and informs the customer or service centre of the outcome. All issues and solutions can be seen by all service centres.

PCB Information

A PCB Information document provides the PCB layout, BOMs, and circuit diagrams for a specified issue of a board. For every issue of a board, there is a different **PCB Information document**. See "Check the Issue Number" on page 117. Always download the correct PCB Information document from the Tait Technical Support website. If you cannot find the required document, please contact your nearest Tait CSO.

Tip It is good practice to print and store a copy of all relevant PCB Information.

© Tait Electronics Limited November 2007

4.2 Tools, Equipment and Spares

Torque drivers

The following torque drivers are required for level-1 repairs, and for level-2 repairs excluding SMT circuit boards repairs.

- Torx T6, Torx T10, and Torx T20 driver bits
- 3/16 inch and 14mm long-reach sockets

Refer to the illustrations in "Reassembling the Radio Body" on page 143 for the corresponding torque values.

Tools for SMT Repairs

In general only the standard tools for SMT work are required for level-2 repairs of the circuit boards. In addition, a can-removal tool is recommended but if none is available, a hot-air tool may be used instead. However, it should be noted that a hot-air tool affords little control. Even in skilled hands, use of a hot-air tool to remove cans will result in rapid uncontrolled rises in the temperature of components under the can being removed as well as under any adjacent cans. The circuit board might suffer damage as a result.

Test Equipment

The following test equipment is required for servicing the radio:

- test PC (with programming and calibration applications loaded)
- RF communications test set (audio bandwidth of at least 10kHz)
- oscilloscope
- digital current meter (capable of measuring up to 20A)
- multimeter.

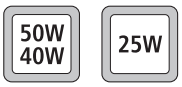

- DC power supply (capable of 13.8V and 20A for the >25W radios, and 10A for the 25W radios)
- spare control head
- service kit.

Separate instruments may be used in place of the RF communications test set. These are an RF signal generator, audio signal generator, audio analyser, RF power meter, and modulation meter.

© Tait Electronics Limited November 2007

Service Kit

The **TM8100/TM8200 service kit** (TMAA21-00) includes:

- the special tools needed to service the radio
- a test unit, and the items needed to connect a radio to a test unit
- the programming and calibration cables and adapters
- the printed service documentation

Table 4.1 Contents of service kit (TMAA21-00)

Product code	Item
TPA-SV-006	Cable (serial PC to RJ12 plug)
TMAA20-02	Cable (RJ45 socket to DB9 socket)
TMAA20-03	Cable (25W power connector to banana plugs plus speaker connector)
TMAA20-04	Cable (RJ12 socket to RJ45 plug)
TMAA21-01	Cable (DB15 socket to RJ45 plug plus speaker connector)
TMAA23-02	Cable (>25W power connector to banana plugs plus speaker connector)
TOPA-SV-024	Test unit
MMA-00005-**xx**[1]	Service manual
MMA-00037-**xx**	PCB information
TMAA20-01	Product support CD
406-00046-**xx**	Programming CD

[1] Where xx represents the issue number of the manual. You can generally order only the latest issue of a manual.

© Tait Electronics Limited November 2007

4.3 Servicing Precautions

Introduction

This section discusses the precautions that need to be taken when servicing the radios. These precautions fall into the following categories:

- mechanical issues
- compliance issues
- anti-static precautions
- transmitter issues.

Service technicians should familiarize themselves with these precautions before attempting repairs of the radios.

Use of Torque-drivers

Apply the correct torque when using a torque-driver to tighten a screw or nut in the radio. Under-torquing can cause problems with microphonics and heat transfer. Over-torquing can damage the radio. The illustrations in "Disassembly and Reassembly" on page 135 show the correct torque values for the different screws and nuts.

Non-scratch Bench Tops

Use workbenches with non-scratch bench tops so that the mechanical parts of the radio are not damaged during disassembly and re-assembly. (The workbench must also satisfy the anti-static requirements specified below.) In addition, use a clear area of the bench when disassembling and re-assembling the radio.

Compliance Issues

Note The radio is designed to satisfy the applicable compliance regulations. Do not make modifications or changes to the radio not expressly approved by TEL. Failure to do so could invalidate compliance requirements and void the Customer's authority to operate the radio.

Sealing of Radio

To maintain the sealing of the radio to IP54 standards, ensure that all bungs and seals are fitted after servicing the radio. These are for the auxiliary, RF, external options, and programming connectors:

- bung for auxiliary connector
- rubber seal for RF connector
- bung for aperture for options connector (connector not fitted)
- cover seal for options connector (connector fitted).

In addition, ensure that the grommet sealing the aperture to the microphone connector of the control head is properly fitted.

ESD Precautions

For information about anti-static precautions and the dangers of electrostatic discharge, refer to standards such as ANSI/ESD S20.20-1999 and BS EN 100015-4 1994 or go to the Electrostatic Discharge Association website www.esda.org/.

© Tait Electronics Limited November 2007

Important This equipment contains devices that are susceptible to damage from electrostatic discharge (ESD). Handle every device carefully and in strict accordance with the procedures defined in the data book provided by the manufacturer.

Tait recommends that you purchase an **anti-static bench kit** from a reputable manufacturer. The bench must have:

- a dissipative rubber bench top
- a conductive wrist strap
- a connection to ground

Install and test the bench kit in accordance with the manufacturer's instructions. See Figure 4.1.

Figure 4.1 Typical anti-static bench setup

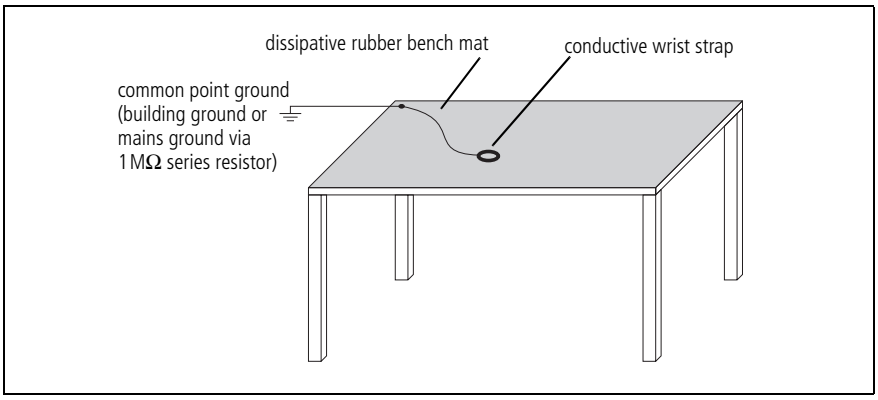

Also take strict anti-static measures when **storing, shipping, or carrying** a circuit board or its components:

- To carry, store, or ship a circuit board use an anti-static bag.
- To carry, store, or ship a component use foil, an anti-static bag, or an anti-static tube.

You can also use an anti-static tray to carry a circuit board or component.

Transmitter Issues

The following issues relate to the operation of the transmitter:

- RF and thermal burns
- antenna loading
- test transmissions
- accidental transmissions
- distress beacons.

The precautions required in each case are given below.

Caution **Avoid thermal burns. Do not touch the cooling fins or underside of the radio body when the transmitter**

is or has been operating. Avoid RF burns. Do not touch the antenna while the transmitter is operating.

Important The radio has been designed to operate with a 50Ω termination impedance. Do not operate the transmitter without a suitable load. Failure to do so might result in damage to the power output stage of the transmitter.

Important While servicing the main board, avoid overheating the radio during test transmissions. The following is good practice: Secure the main-board assembly in the chassis with the two external screws and one of the internal screws. The heat-transfer block must be secured to the main board. The lid of the radio body may be left off. After completing any measurement or test requiring activation of the transmitter, immediately return the radio to the receive mode.

Important Under certain circumstances the microprocessor can key on the transmitter. Ensure that all instruments are protected at all times from such accidental transmissions.

Note The frequency ranges 156.8 MHz ± 375 kHz, 243 MHz ± 5 kHz, and 406.0 to 406.1 MHz are reserved worldwide for use as maritime emergency frequencies or by distress beacons. Do not program transmitters to operate in any of these frequency bands.

© Tait Electronics Limited November 2007

4.4 Setting up the Test Equipment

This section covers the setting up of the test equipment for servicing the radios, as well as related aspects:

- setting up of test equipment, including test unit
- basic programming and calibration tasks
- invoking CCTM (computer-controlled test mode)
- summary tables of CCTM commands and error codes
- visual and audible indications provided by radio

The last-named aspect applies to control heads with UI, and concerns the STATUS LEDs and LCD screen, and the various alerts and confidence tones emitted from the speaker.

Connect Equipment

Connect the test equipment to the radio as shown in Figure 4.2. Use the test unit, cables and adaptor of the service kit. Refer to "Tools, Equipment and Spares" on page 110 for details of the test equipment and service kit. The test unit is described in "TOPA-SV-024 Test Unit" on page 613.

For testing receive and transmit functions respectively, the switches of the test unit must be set as described below. (When programming or calibrating radios the switches have no effect, although it is good practice to set the MODE switch to "RX".)

Settings for Receive Tests

For receive tests set the switches on the test unit as follows:

- HOOK switch : "OFF HOOK"
- MODE switch : "RX"
- AUDIO IN switch : "OFF"
- AUDIO OUT switch: "SPEAKER" or "LOAD".

In the last-named case, with the switch in the "SPEAKER" position, the received audio is output from the test unit's speaker. In the "LOAD" position a 16Ω load is switched into the circuit in place of the test unit's speaker. Note, however, that the AUDIO OUT switch has no effect on the radio's speaker.

Settings for Transmit Tests

For transmit tests set the switches on the test unit as follows:

- HOOK switch : "OFF HOOK"
- MODE switch : "RX" initially
- AUDIO IN switch : "MIC AUDIO"
- AUDIO OUT switch: (immaterial).

When ready to transmit, set the MODE switch to the "TX/PTT" position. This switch functions in the same way as the PTT switch on the microphone.

Product Support CD

Install the programming and calibration applications on the test PC. These applications are included on the product support CD supplied with the service kit.

© Tait Electronics Limited November 2007

Figure 4.2 Test setup

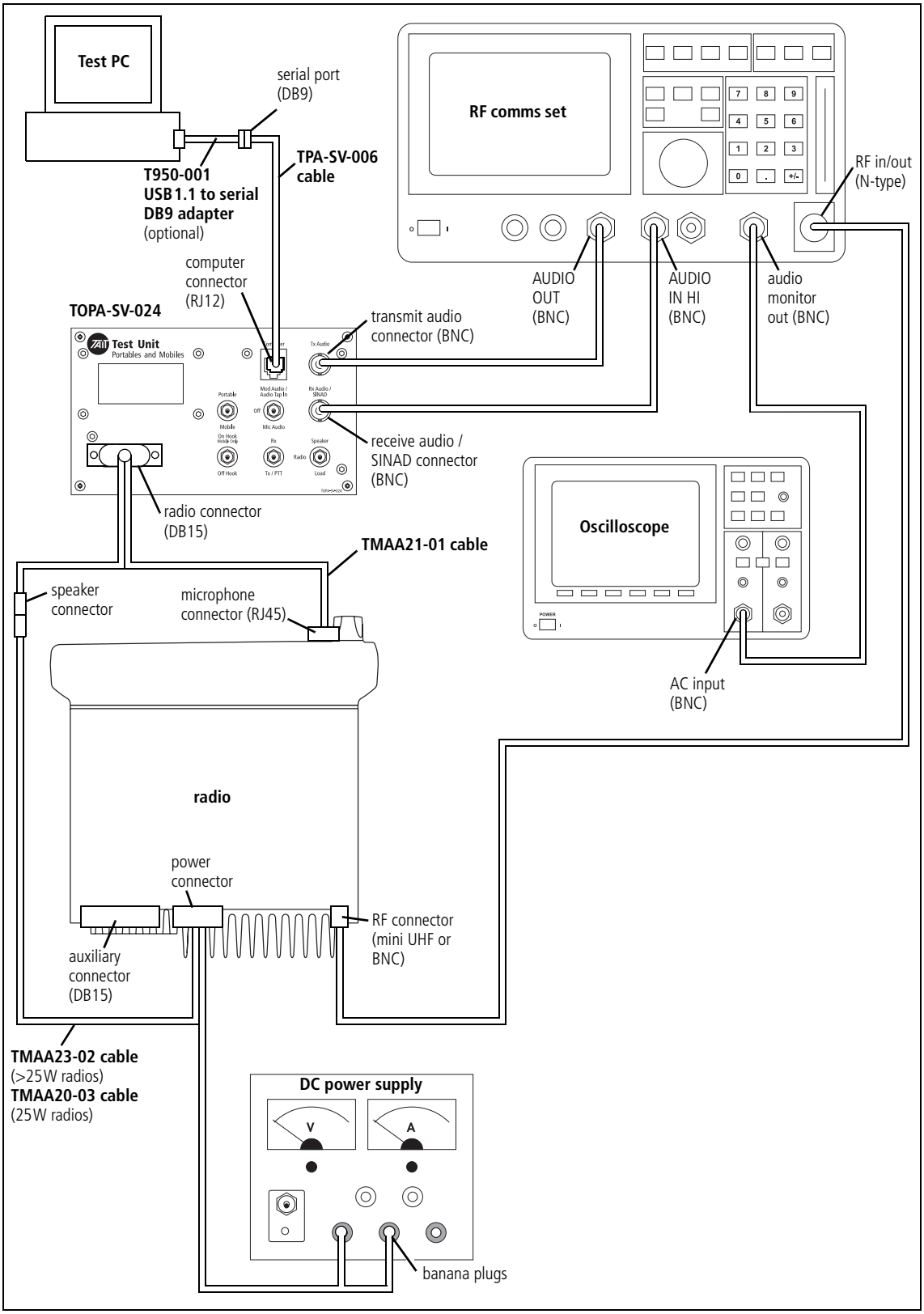

© Tait Electronics Limited November 2007

4.5 Replacing Board Components

To obtain a replacement board component, complete the following steps in the order shown:

1. Check the issue number.
2. Identify the damaged component.
3. Consult the technical notes.
4. Verify the specifications.
5. Order the replacement component.

Check the Issue Number

1. Locate the unique 10-digit Internal Part Number (IPN) that is printed on the PCB. For example, **220-01761-09**.
2. Make sure that the IPN on the board is identical to the IPN on the PCB Information document that was supplied with the service documentation.

   The last two digits of each Internal Part Number (IPN) are the issue number of the board. Starting at 01, the issue number increments by one (02, 03, and so on) each time the PCB is re-issued. See also "Consult the Technical Notes", below.
3. If the IPNs do not match, download the correct version of the PCB Information from the Technical Support website.

Note To replace a printed board assembly, such as a control board, quote the relevant product code: see "Product Codes" on page 17.
To replace a component on a PCB, however, use the IPN on the PCB to locate the correct PCB Information document: see "PCB Information" on page 109.

Identify the Damaged Component

1. Consult the BOM for the board under repair.
2. Use the BOM to identify the damaged component.

Consult the Technical Notes

Consult all technical notes that apply to the board before ordering the replacement component. Technical notes are published on the Technical Support website.

When there is a major change in the design of a board, such as a change in layout, the **issue number** of the board increments. When this happens, the IPN changes, new PCB Information is published, and a technical note is created. In between major changes, minor changes may be made to a board. For example, one component may be changed. There is no change to the issue number of the board, but if the minor change is important, a technical note is created. IPN and PCB Information will not alert you to a minor change: only the technical notes will. It is good practice to print and store a copy of every technical note.

© Tait Electronics Limited November 2007

Verify the Specifications

Before ordering the part, make sure that the specifications of the damaged part are identical to the specifications given in the BOM. It is particularly important for tolerances to be the same. When the replacement component arrives, verify specifications again before installing the part.

Obtain Replacement Component

To determine whether the required component can be ordered as a stand-alone part, see "Spare Parts" on page 455. If the item can be ordered as a stand-alone part, order it from your nearest Tait CSO. If the item is available only as part of a spares kit, check with Tait regarding the availability of the kit.

© Tait Electronics Limited November 2007

4.6 Shielding Cans and Connectors

The shielding cans on the top- and bottom-side of the main-board assembly are identified in Figure 4.3 and Figure 4.4. The figures also show the locations of the connectors on the board.

Figure 4.3 Shielding cans and connectors (top side of main-board assembly)

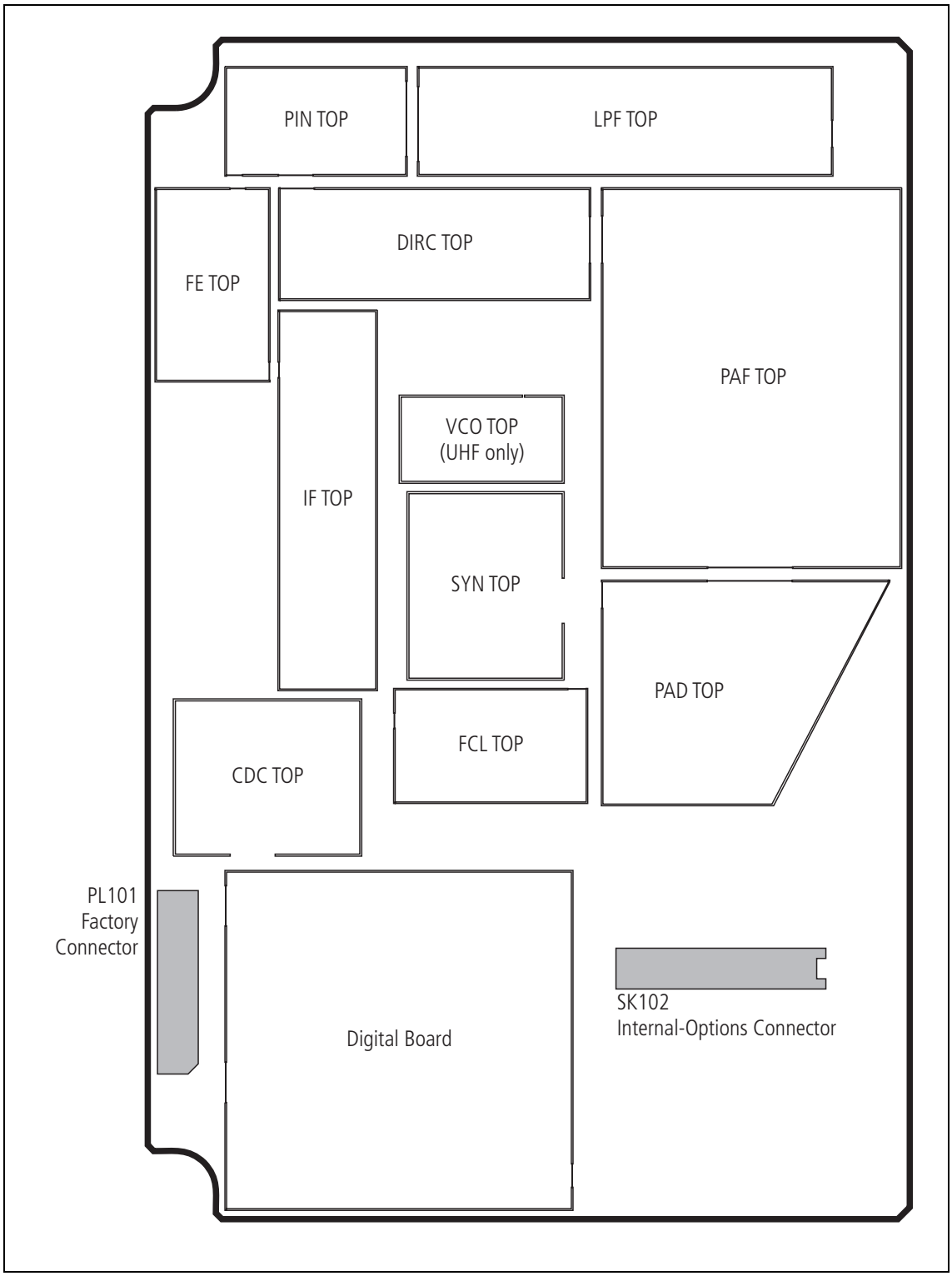

© Tait Electronics Limited November 2007

Figure 4.4 Shielding cans and connectors (bottom side of main-board assembly)

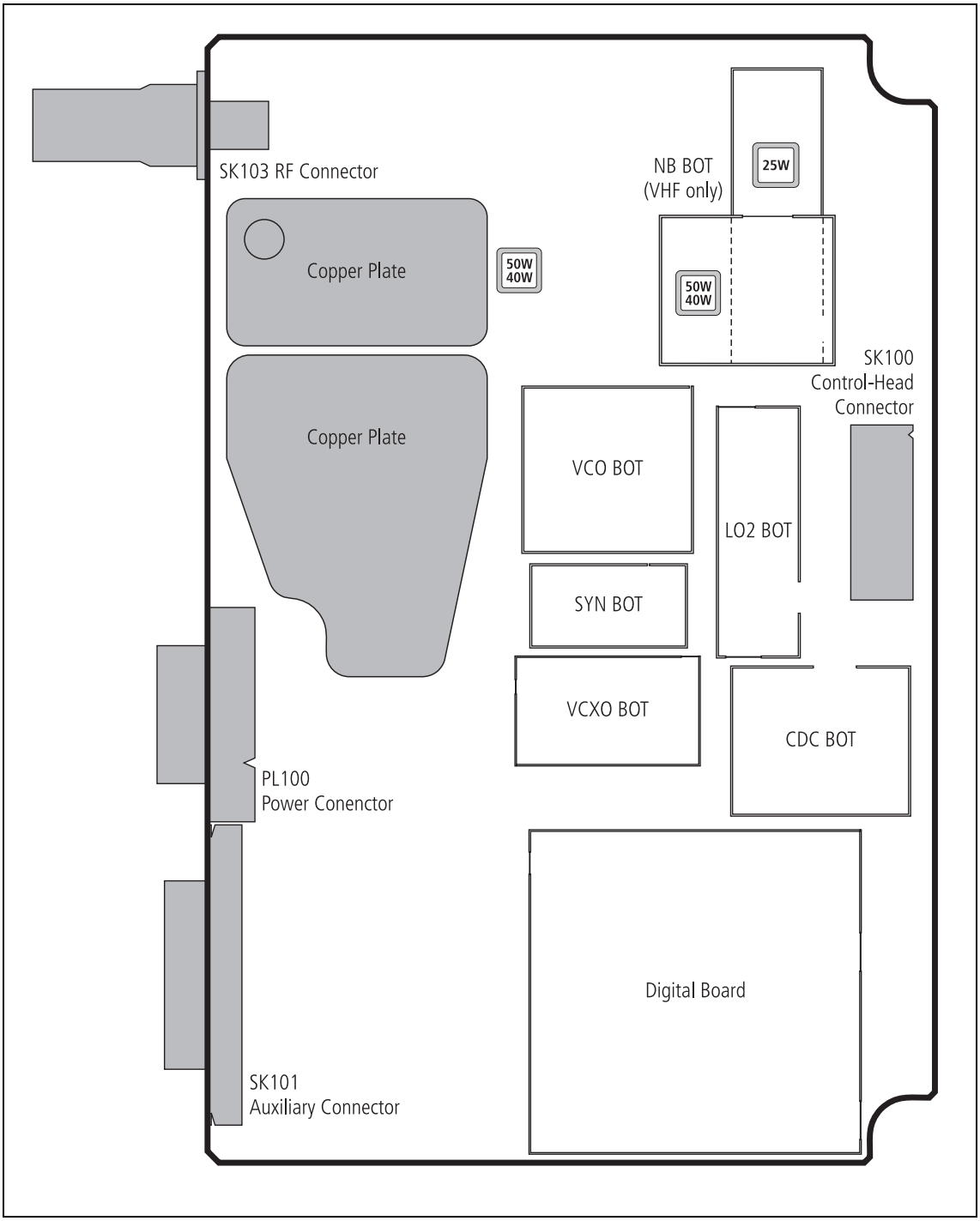

Can Removal and Installation

Cans are best removed and installed using a can-removal tool. If this tool is available, technicians should refer to the documentation supplied with the tool for the correct procedures. If the tool is not available, a hot-air tool may be used instead. However, technicians require training in the best techniques to employ in the absence of a can-removal tool. Such training is part of the accreditation process for service centres.

© Tait Electronics Limited November 2007

Spare Cans

It is good practice to discard any can that has been removed and replace it with a spare can. If this is not done, special precautions are needed when re-installing the original can. These precautions are discussed as part of the training for accreditation.

4.7 SMT Repair Techniques

Standard Procedures

Service centres carrying out level-2 repairs are expected to be familiar with the standard techniques for the replacement of SMT components. However, certain components on the main board require non-standard techniques and these are discussed below. Another issue of concern is the procedure for removing and installing cans. A discussion of the issue concludes this section.

Non-standard Procedures

Do not use the standard SMT repair techniques when replacing the capacitors C548 and C565 and the inductors L601 and L602. The standard techniques tend to produce excessive heat, which will damage these components. Do not use a hot-air tool or heat gun. Instead use solder paste and a standard soldering iron with an iron tip with a specified temperature of 600°F (315°C). The capacitors are part of the frequency-synthesizer circuitry under the SYN TOP can. The inductors are part of the SMPS of the power-supply circuitry on the bottom-side of the board. Figure 4.5 on page 122 shows the locations of the components.

© Tait Electronics Limited November 2007

Figure 4.5 Locations of the capacitors C548 and C565 and the inductors L601 and L602

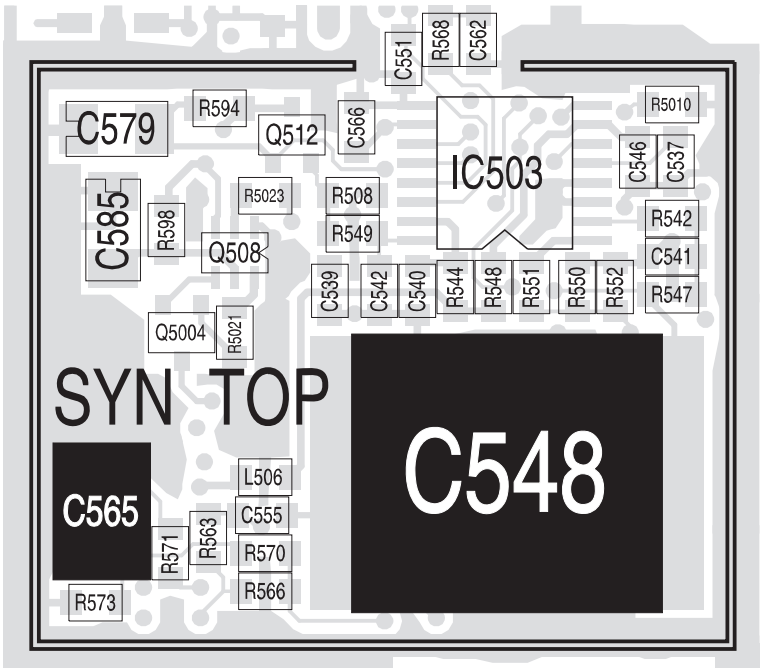

top side
(VHF board. UHF board similar)
Note that other components may be fitted for C548 (such as C5085 and C5086 for UHF radios)

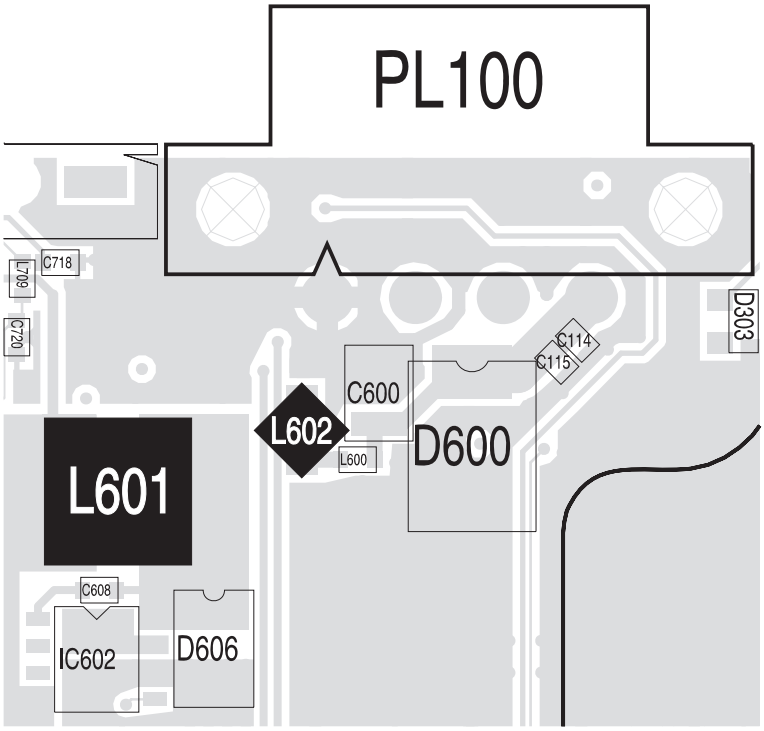

bottom side
(UHF board. VHF board similar)

© Tait Electronics Limited November 2007

4.8 Computer-Controlled Test Mode (CCTM)

The servicing procedures require a radio to be placed in the computer-controlled test mode. In this mode CCTM commands can be entered at the test PC. These commands are then relayed via the test unit to the radio. Certain CCTM commands cause the radio to carry out particular functions; others read particular settings and parameter values in the radio. The CCTM commands of use in servicing radios are listed in Table 4.2 to Table 4.6, grouped according to category.

Terminal Program for CCTM

Use the calibration application to place the radio in CCTM. To do this, run the calibration application, select *Tools > CCTM*, and click the *CCTM Mode* button. For more information, refer to the online help of the calibration application.

You can also use the HyperTerminal utility which is supplied with Microsoft Windows. As a preliminary, first select the settings for the communications port as follows:

1. Open the terminal program. (In the case of HyperTerminal, click *Start* > *Programs* > *Accessories* > *Communications* > *HyperTerminal*.)
2. In the terminal program first select the COM port to which the radio is connected. Then select the following settings for the port:
   - bits per second : 19 200
   - data bits : 8
   - parity : none
   - stop bits : 1
   - flow control : none.
3. Click the *OK* button (or equivalent).
4. Save the file with the port settings under a suitable name. For subsequent sessions requiring the terminal program, open this file.

Invoking CCTM

Using the terminal program, place the radio in CCTM as follows:

1. Enter the character ^ to reset the radio.
2. As soon as the radio is reset, the letter *v* is displayed. (If an uppercase letter *V* appears, this implies a fault.)
3. Immediately the letter *v* is displayed, enter the character %. (The character % must be entered within half a second of the letter *v* appearing.)
4. If the character % is accepted, the character – is displayed in response, and the message *Test Mode* appears on the radio display. This implies that the radio has entered CCTM. If the attempt fails, repeat Steps 1 to 3.

© Tait Electronics Limited November 2007

Table 4.2 CCTM commands in the audio category

Command	Usage	
	Entry at keyboard	**Response on screen**
Audio category		
20 – Mute received audio Forces muting of the received audio signal	*20*	None
21 – Unmute received audio Forces unmuting of the received audio signal	*21*	None
22 – Mute microphone Mutes transmit modulation (effectively mutes microphone audio)	*22*	None
23 – Unmute microphone Unmutes transmit modulation (effectively unmutes microphone audio)	*23*	None
74 – Audio PA Controls the state of the audio PA (and hence enables or disables the speaker)	*74* ***x*** where ***x*** is the required state (0=stand-by, 1=on, 2=mute)	None
110 – Audio volume Sets the level of the audio volume	*110* ***x*** where ***x*** defines the required level (any integer from 0 to 255)	None
138 – Select microphone Selects the microphone required	*138* ***x*** where ***x*** is the required microphone (0=control-head microphone; 1=auxiliary microphone)	None
323 – Audio tap in Generates the audio tone AUD TAP IN at the specified tap point	*323* ***x y*** where ***x*** specifies the tap point (*r2*, *r5*, *t1* or *t5*) and ***y*** the tap type (A=bypass in, B=combine, E=splice) (the default is A when ***y*** is omitted)	None
324 – Audio tap out Outputs the audio signal at the specified tap point to AUD TAP OUT	*324* ***x y*** where ***x*** specifies the tap point (*r1*, *r2*, *r3*, *r4*, *r5*, *t1*, *t2*, *t3* or *t7*) and ***y*** the tap type (C=bypass out, D=split, E=splice) (the default is D when ***y*** is omitted)	None

© Tait Electronics Limited November 2007

Table 4.3 CCTM commands in the radio-information, radio-control and system categories

Command	Usage	
	Entry at keyboard	**Response on screen**
Radio-information category		
94 – Radio serial number Reads the serial number of the radio	*94*	***x*** where ***x*** is the serial number (an eight-digit number)
96 – Firmware version Reads the version number of the radio firmware	*96*	*QMA1F_**x**_**y*** where ***x*** is a three-character identifier and ***y*** is an eight-digit version number
97 – Boot-code version Reads the version number of the boot code	*97*	*QMA1B_**x**_**y*** where ***x*** is a three-character identifier and ***y*** is an eight-digit version number
98 – FPGA version Reads the version number of the FPGA	*98*	*QMA1G_**x**_**y*** where ***x*** is a three-character identifier and ***y*** is an eight-digit version number
133 – Hardware version Reads the product code of the radio body and the hardware version number	*133*	***x*** **y** where ***x*** is the product code and ***y*** is the version number (a four-digit number)
134 – FLASH serial number Reads the serial number of the FLASH memory	*134*	***x*** where ***x*** is the serial number (a 16-digit hexadecimal number)
Radio-control category		
400 – Select channel Changes the current channel to that specified	*400* ***x*** (alternatively *****x***) where ***x*** is a valid channel number	None
System category		
46 – Supply voltage Reads the supply voltage	*46*	***x*** where ***x*** is the supply voltage in millivolts
203 – Clear system error Clears the last recorded system error	*203*	None
204 – Read system error Reads the last recorded system error and the associated data	*204*	*SysErr:* ***x*** **y** where ***x*** is the error number and ***y*** represents the associated data
205 – Erase persistent data Effectively resets the calibration parameters to their default values	*205*	None

© Tait Electronics Limited November 2007

Table 4.4 CCTM commands in the frequency-synthesizer and receiver categories

Command	Usage	
	Entry at keyboard	**Response on screen**
Frequency-synthesizer category		
72 – Lock status Reads the lock status of the RF PLL, FCL and LO2 respectively	*72*	***x y z*** where ***x*** is the RF PLL, ***y*** the FCL, and ***z*** the LO2 lock status (0=not in lock, 1=in lock)
101 – Radio frequencies Sets the transmit and receive frequencies to specified values	*101* ***x y*** *0* where ***x*** is the transmit and ***y*** the receive frequency in hertz (any integer from 50 000 000 to 1000 000 000)	None
301 – Calibrate VCXO Calibrates the VCXO of the FCL	*301 0 10*	Four KVCXO control sensitivity values, followed by message with results of calibration attempt
302 – Calibrate VCO(s) Calibrates the VCO(s) of the frequency synthesizer	*302 0 10*	Eight KVCO control sensitivity values, followed by message with results of calibration attempt
334 – Synthesizer power Switches the frequency synthesizer on or off via the DIG SYN EN line	*334* ***x*** where ***x*** is the required state (0=off, 1=on)	None
335 – Synthesizer switch Switches the transmit-receive switch of the frequency synthesizer on or off via the DIG SYN TR SW line	*335* ***x*** where ***x*** is the required state (0=off, 1=on)	None
389 – Synthesizer mode Sets the mode of the frequency synthesizer to fast or slow	*389* ***x*** where ***x*** is the required mode (0=slow, 1=fast)	None
Receiver category		
32 – Receive mode Sets the radio in the receive mode	*32*	None
63 – RSSI level Reads the averaged RSSI level	*63*	***x*** where ***x*** is the averaged level in multiples of 0.1 dBm
376 – Front-end tuning Sets or reads the tuning voltage for the front-end circuitry of the receiver	*376* (to read voltage)	***x*** where ***x*** is the front-end tuning voltage in millivolts
	376 ***x*** (to set voltage) where ***x*** is the front-end tuning voltage in millivolts (any integer from 0 to 3000)	None
378 – Receiver output level Reads the signal power at the output of the channel filter (the square of the amplitude)	*378*	***x*** where ***x*** is the signal power

© Tait Electronics Limited November 2007

Table 4.5 CCTM commands in the transmitter category (part 1)

Command	Usage	
	Entry at keyboard	**Response on screen**
Transmitter category		
33 – Transmit mode Sets the radio in the transmit mode	*33*	None
47 – Temperature Reads the temperature in the vicinity of the PAs	*47*	***x*** ***y*** where ***x*** is the temperature in degrees celsius, and ***y*** is the corresponding voltage in millivolts (a value from 0 to 1200 mV)
114 – Transmitter power Sets or reads the transmitter power setting (compare command 326)	*114* (to read value)	***x*** where ***x*** is the current power setting (an integer from 0 to 1023)
	114 ***x*** (to set value) where ***x*** is the required power setting (an integer from 0 to 1023)	None
304 – Driver bias Sets or reads the clamp current at the gate of the PA driver	*304* (to read value)	***x*** where ***x*** is the DAC value of the clamp current (an integer from 0 to 255)
	304 ***x*** (to set value) where ***x*** is the required DAC value of the clamp current (an integer from 0 to 255)	None
318 – Forward power Reads the forward-power level	*318*	***x*** where ***x*** is the voltage in millivolts corresponding to the power level (a value from 0 to 1100 mV)
319 – Reverse power Reads the reverse-power level	*319*	***x*** where ***x*** is the voltage in millivolts corresponding to the power level (a value from 0 to 1100 mV)
326 – Transmitter power Sets the power level of the transmitter	*326* ***x*** where ***x*** specifies the level (0=off, 1=very low, 2=low, 3=medium, 4=high, 5=maximum)	None

© Tait Electronics Limited November 2007

Table 4.6 CCTM commands in the transmitter category (part 2)

Command	Usage	
	Entry at keyboard	**Response on screen**
Transmitter category		
331 – Final bias 1 Sets or reads the bias voltage for the first PA	*331* (to read value)	***x*** where ***x*** is the DAC value of the bias voltage (an integer from 0 to 255)
	331 ***x*** (to set value) where ***x*** is the DAC value of the required bias voltage (any integer from 0 to 255)	None
332 – Final bias 2 Sets or reads the bias voltage for the second PA	*332* (to read value)	***x*** where ***x*** is the DAC value of the bias voltage (an integer from 0 to 255)
	332 ***x*** (to set value) where ***x*** is the DAC value of the required bias voltage (any integer from 0 to 255)	None

© Tait Electronics Limited November 2007

Table 4.7 CCTM commands for the control head (graphical display)

Command	Usage	
	Entry at keyboard	**Response on screen**
1000 – Switch all LEDs Switches all the function-key and STATUS LEDs on or off	*1000* ***x*** where ***x*** is the required state (0=off, 1=on)	None
1001 – Switch selected LED Switches a selected function-key or STATUS LED on or off	*1001* ***x y*** where ***x*** identifies the LED (0=F1, 1=F4, 2=yellow, 3=green, 4=red) and ***y*** is the state (0=off, 1=on)	None
1002 – LED intensity Sets the LED intensity	*1002* ***x*** where ***x*** is the intensity level (0=off, 1=low, 2=medium, 3=high)	None
1003 – Keypad back-lighting Activates the keypad back-lighting at a specified intensity	*1003* ***x*** where ***x*** is the intensity level (0=off, 1=low, 2=medium, 3=high)	None
1004 – LCD back-lighting Activates the LCD back-lighting at a specified intensity	*1004* ***x*** where ***x*** is the intensity level (0=off, 1=low, 2=medium, 3=high)	None
1005 – Display contrast Sets the contrast of the display to a specified level	*1005* ***x*** where ***x*** is the contrast level (any integer from 0 to 15)	None
1006 – Display elements Switches all the elements of the display on or off	*1006* ***x*** where ***x*** is the required state (0=off, 1=on)	None
1007 – LCD temperature sensor Reads the output of the LCD temperature sensor	*1007*	***x*** where ***x*** corresponds to the temperature reading (an integer between 00 and FF)
1008 – LCD heating Switches the LCD heating on or off	*1008* ***x*** where ***x*** is the required state (0=off, 1=on)	None
1009 – Key press Switches on or off the facility for detecting if any key is pressed or released	*1009* ***x*** where ***x*** is the required state (0=off, 1=on)	***x*** where ***x*** is the serial output from the detection facility
1010 – Volume control Reads the setting of the volume-control potentiometer	*1010*	***x*** where ***x*** is the potentiometer setting (an integer between 00 and FF)
1011 – Microphone source Selects the microphone input source	*1011* ***x*** where ***x*** is the required source (0=microphone connector, 1=concealed microphone)	None

Table 4.8 CCTM commands of the remote control-head kit

CCTM command	Entry at keyboard	Response on screen
1012 – Remote kit turns the audio amplifier on and off	1012 0 = off 1012 1 = on	none
1013 – Mute audio amplifier mutes and unmutes the audio amplifier	1012 0 = mute 1012 1 =unmute	none
1014 – Digital potentiometer reads the digital potentiometer	1014	value between 0 and 255
1017 – Audio amplifier gain sets the audio amplifier gain (4 levels)	1017 **x** where **x** is the gain (0 to 3)	none

© Tait Electronics Limited November 2007

CCTM Error Codes

Once the radio is in CCTM, the CCTM commands may be entered as shown in Table 4.2 to Table 4.6. Depending on the command, a response might or might not be displayed. If an error occurs, an error code will be displayed. Possible error codes are listed in Table 4.9.

Table 4.9 CCTM error codes

Error code	Description
C01	An invalid CCTM command has been received. Enter a valid CCTM command.
C02	A valid CCTM command with invalid parameters has been received. Re-enter the CCTM command with valid parameters.
C03	A valid CCTM command has been received but cannot be processed at this time. Enter the CCTM command again. If the error persists, power the radio down and up again, and re-enter the CCTM command.
C04	An error occurred on entry into CCTM. Power the radio down and up again, and place the radio in CCTM again.
C05	The radio has not responded within the specified time. Re-enter the CCTM command.
X04	The DSP is not responding. Check the DSP pin connections. If the error persists, replace the DSP.
X05	The version of the DSP is incompatible with the version of the radio firmware. Replace the DSP with a later version.
X06	The internal configuration of the MCU is incorrect. Adjust the configuration.
X31	There is an error in the checksum for the model configuration.
X32	There is an error in the checksum for the radio's database.
X35	The radio temperature is above the T1 threshold and a reduction in the transmit power is impending. To avoid damaging the radio, stop transmitting until the radio has cooled down sufficiently.
X36	The radio temperature is above the T2 threshold and the inhibiting of transmissions is imminent.
X37	The supply voltage is less than the V1 threshold.
X38	The supply voltage is less than the V2 threshold and the radio has powered itself down. The radio will not respond to the reset command character ^ .

© Tait Electronics Limited November 2007

4.9 Defining Frequency Bands

Where test procedures or figures differ according to the frequency band of the radio, the frequency band is given in brackets. The frequency band may be referred to as either 'VHF' (very high frequency) or 'UHF' (ultra-high frequency) or identified by the frequency sub-band, such as 'B1' or 'H7'. For example:

RF output power: > 60W (**VHF**), > 52W (**UHF**)
current: < 15A (**VHF**), < 12A (**UHF**)

In some cases, differences in performance over the frequency band mean that the K5 frequency band may be further divided, into "700MHz" and "800MHz".

The frequency bands for TM8100/TM8200 radios are listed in Table 4.10. The relevant frequencies for the different bands are listed in this table.

Table 4.10 Defining frequency bands

	Frequency identification	Frequency sub-band
VHF	A band	A4 = 66MHz to 88MHz
	B band	B1 = 136MHz to 174MHz
	C band	C0 = 174MHz to 225MHz
	D band	D1 = 216MHz to 266MHz
UHF	G band	G2 = 350MHz to 400MHz
	H band	H5 = 400MHz to 470MHz H6 = 450MHz to 530MHz H7 = 450MHz to 520MHz
700/ 800 MHz	K band	K5 = 762 to 870MHz (Tx) 762 to 776MHz and 850 to 870MHz (Rx)

© Tait Electronics Limited November 2007

4.10 Visual and Audible Indications

Visual and audible indicators give information about the state of the radio. Visual indications are provided by the STATUS LEDs, function-key LEDs, and LCD display. The information conveyed by the STATUS LEDs is listed in Table 4.11. The behaviour of the function-key LEDs depends on the way the function keys are programmed. The LCD display normally displays channel and user information, or error messages. For more information on the LCD display during normal operation, refer to the user's guide.
The error messages are listed in Table 6.1 on page 160. Audible indications are provided in the form of different tones emitted from the speaker.
The information conveyed by the tones is given in Table 4.12 on page 133.

Table 4.11 Visual indications provided by the STATUS LEDs

LED color	LED name	Indications	Meanings
Red	Transmit	LED is on	The radio is transmitting
		LED flashes	(1) The transmit timer is about to expire (2) The radio has been stunned
Green	Receive and monitor	LED is on	There is activity on the current channel, although it might not be audible
		LED flashes	(1) The radio has received a call with valid special signaling (2) The monitor has been activated (3) The squelch override has been activated
Amber	Scanning	LED is on	The radio is scanning a group of channels for activity
		LED flashes	The radio has detected activity on a certain channel and scanning has halted on this channel

© Tait Electronics Limited November 2007

Table 4.12 Audible indications

Type of tone	Meanings
One short beep	(1) After power-up — Radio is locked; PIN is required (2) On power-down — Radio is off (3) On pressing key — Key-press is valid (4) On pressing function key — Function has been initiated
One short low-pitched beep	On pressing function key again — Function has been terminated
One short high-pitched beep	While powered up — Radio has been stunned
One long low-pitched beep	(1) On pressing key — Key-press is invalid (2) On entry of PIN — PIN is invalid (3) On pressing PTT switch — Transmission is inhibited
Two short beeps	(1) On power-up — Radio is ready to use (2) On entry of PIN — PIN has been accepted and radio is ready to use (3) After radio has been stunned — Radio has been revived and is ready to use
Two low-pitched beeps	While powered up — Temperature of radio is high
Two high-pitched beeps	While powered up — Temperature of radio is very high and all transmissions will be at low power; if temperature rises further, transmissions will be inhibited
Three short beeps	While powered up — Previously busy channel is now free
Three beeps	During transmission — Transmit time-out is imminent; transmission will be terminated in 10 seconds
Warble	While powered up — Frequency synthesizer is out of lock on current channel; LCD will usually display *Out of Lock* (graphical display), *OL* (2- or 3-digit display), or *L* (1-digit display).
Continuous low-pitched tone	While powered up — System error has occurred and radio might be inoperable; LCD usually displays *System Error* (graphical display), *E1* or *E2* (2- or 3-digit display), or *E* (1-digit display).

© Tait Electronics Limited November 2007

© Tait Electronics Limited November 2007

5 Disassembly and Reassembly

This section describes how to:

- remove and mount the control head
- disassemble and reassemble the radio body
- disassemble and reassemble the control heads.

General

Important Before disassembling the radio, disconnect the radio from any test equipment or power supply.

Disassemble only as much as necessary to replace the defective parts.

Inspect all disassembled parts for damage and replace them, if necessary.

Observe the torque settings indicated in the relevant figures.

For information on spare parts, refer to "Spare Parts" on page 455.

© Tait Electronics Limited November 2007

5.1 Removing and Mounting the Control Head

Important Before removing the control head, disconnect the radio from any test equipment or power supply.

Removing the Control Head

1. Note which way up the control head is attached to the radio body in order to return the radio to the customer in its original configuration.

2. On the underside of the radio body, two lever points are indicated on the radio body by a dot-dash-dot pattern (○ ▭ ○).
The lever point is between the control-head seal and the plastic of the control head.

Figure 5.1 Disconnecting the control head from the radio body

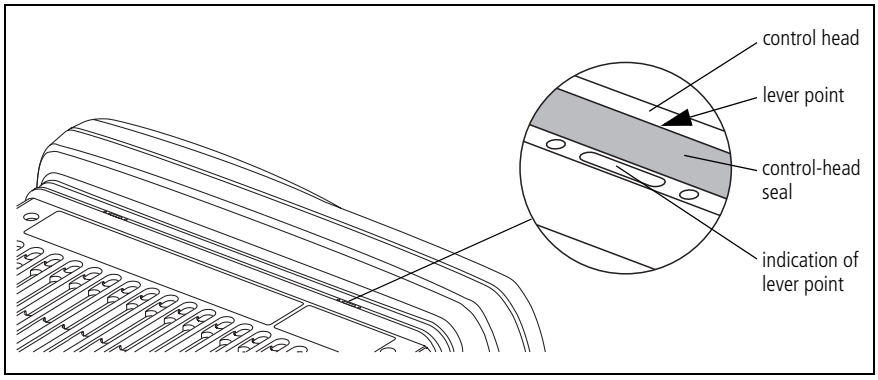

Important When inserting the flat-bladed screwdriver, take care not to damage the control-head seal.

3. At either of the lever points, insert a 3/16 inch (5mm) flat-bladed screwdriver between the control head and the control-head seal.

4. Use the screwdriver to lift the edge of the control head up and off the clip, then repeat in the other position. The control head can now be removed.

5. Disconnect the control-head loom.

6. Inspect the control-head seal for damage, and replace if necessary.

Mounting the Control Head

1. Plug the control-head loom onto the control-head connector.

2. Insert the bottom edge of the control head onto the two clips in the front of the radio body, then snap into place.

© Tait Electronics Limited November 2007

5.2 Disassembling the Radio Body

Disassemble only as much as necessary to replace the defective parts.
For reassembly instructions, refer to "Reassembling the Radio Body" on page 143.

Removing the Cover

1. At the upper edge of the lower screw bosses on both sides of the radio body, insert a 1/8 inch (3mm) flat-bladed screwdriver.
2. Push the screwdriver under the cover towards the upper screw boss to release the cover from the upper screw boss.
3. Remove the cover.

Figure 5.2 Removing the cover

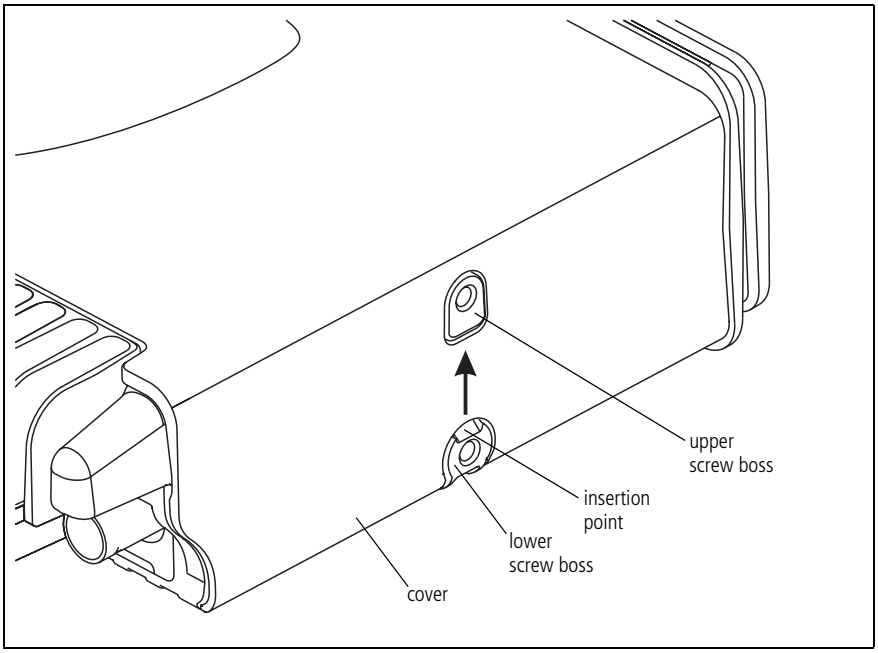

© Tait Electronics Limited November 2007

Opening the Radio Body

The circled numbers in this section refer to the items in Figure 5.3 on page 139.

1. Use a Torx T20 screwdriver to remove the four screws ②.

Important If an options board is fitted inside the lid, an options loom will connect the options board to the internal options connector on the main board. In this case, carefully fold over the lid and disconnect the loom.

2. Carefully remove the lid assembly ③.
3. Inspect the main seal in the lid for damage, and replace if necessary.

Removing the Main-Board Assembly

The circled numbers in this section refer to the items in Figure 5.3 on page 139.

1. Remove the auxiliary connector bung ⑦ (if fitted).
2. Remove the RF connector seal ⑨ using one of the tabs located at the bottom of the seal—preferably by hand. If necessary, lift up the tap using the blade of a small flat-bladed screwdriver. Do not damage the seal with the screwdriver.
3. Use a Torx T10 screwdriver to remove the screws ④ connecting the main board to the chassis.
4. Use a Torx T20 screwdriver to remove the screws ⑧ connecting the heat-transfer block to the rear of the chassis.

Note Make sure not to touch the thermal paste on the chassis, the heat-transfer block, and the underside of the main board. If the thermal paste is contaminated, you must re-apply thermal paste as described in "Fitting the Main-Board Assembly to the Chassis" on page 145.

5. Holding a hand over the chassis to catch the main-board assembly, turn the chassis upside down and tap its fins on the edge of the workbench. This will release the heat-transfer block from the chassis.

>25W

6. With the >25 W radio, the gap pad ⑩ on the L-shaped ridge must be replaced each time the main board is removed.

© Tait Electronics Limited November 2007

Figure 5.3 Components of the radio body

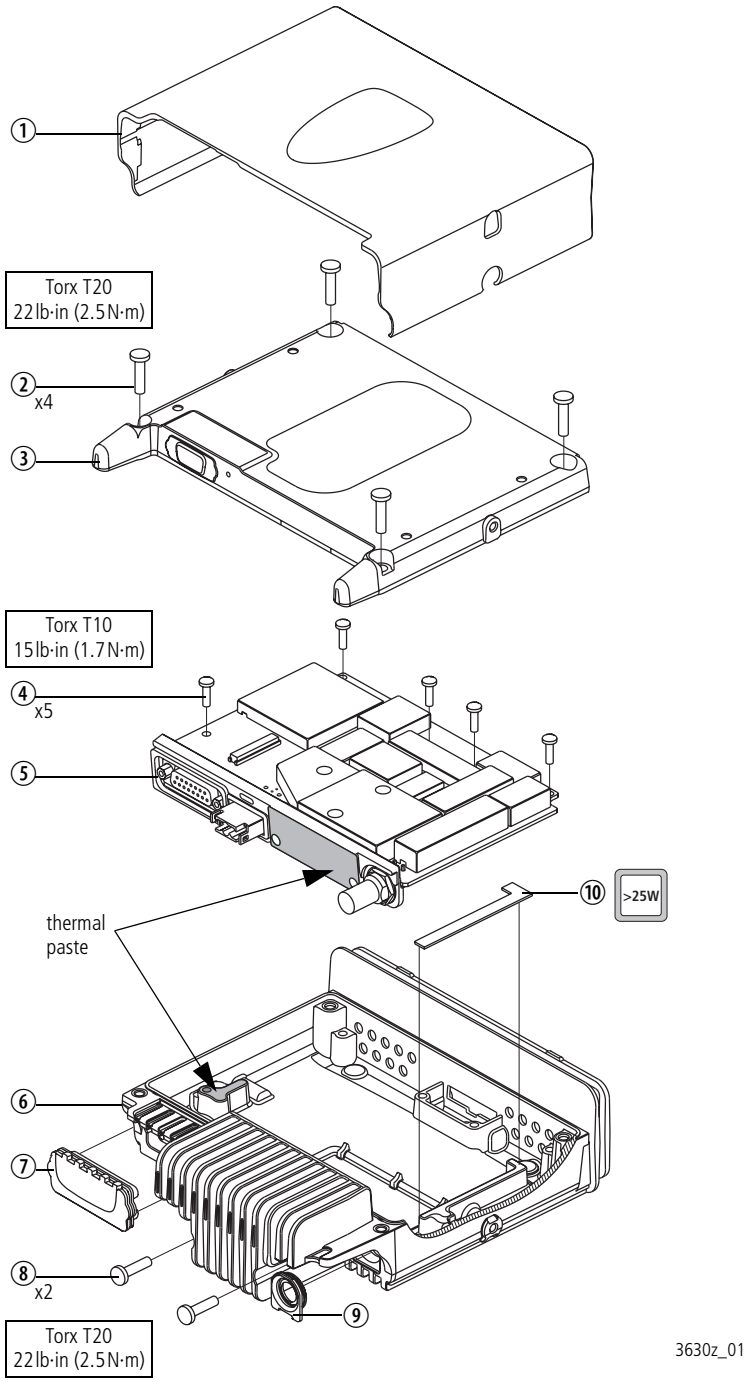

1 cover	6 chassis
2 screw M4 x 16 (x4)	7 auxiliary connector bung
3 lid assembly	8 screws M4 x 16 (x2)
4 screw M3 x 10 (x5)	9 RF connector seal
5 main-board assembly	10 gap pad (>25 W radio only)

Disassembling the Main-Board Assembly

The circled numbers in this section refer to the items in Figure 5.4 on page 141. This figure shows the >25 W configuration.

1. Remove the power connector seal ⑧.
2. Use a torque-driver with a 3/16 inch (5 mm) socket to remove the D-range screwlock fasteners ⑦.
3. Use a torque-driver with a 9/16 inch (14 mm) long-reach socket to remove the RF connector nut ⑪. Also remove the lock washer ⑫.
4. Use a Torx T10 screwdriver to remove the three screws ① securing the main board ⑭ to the heat-transfer block ⑤.

Note Make sure not to touch the thermal paste on the heat-transfer block and the underside side of the main board. If the thermal paste is contaminated, you must re-apply thermal paste as described in "Reassembling the Main-Board Assembly" on page 143.

5. Separate the main board ⑭ from the heat-transfer block ⑤.
6. Inspect the inner foam D-range seal ④ and the outer foam seal ⑥, and replace if necessary.
7. The gap pad ⑩ (>25 W radio only) must be replaced each time the heat-transfer block is separated from the main board.
8. To replace the power connector ⑨:
   - With the >25 W radio, use a Torx T6 screwdriver to undo the two screws ②.
   - With the 25 W radio, use a Torx T10 screwdriver to undo the two screws ②.

© Tait Electronics Limited November 2007

Figure 5.4 Components of the main-board assembly

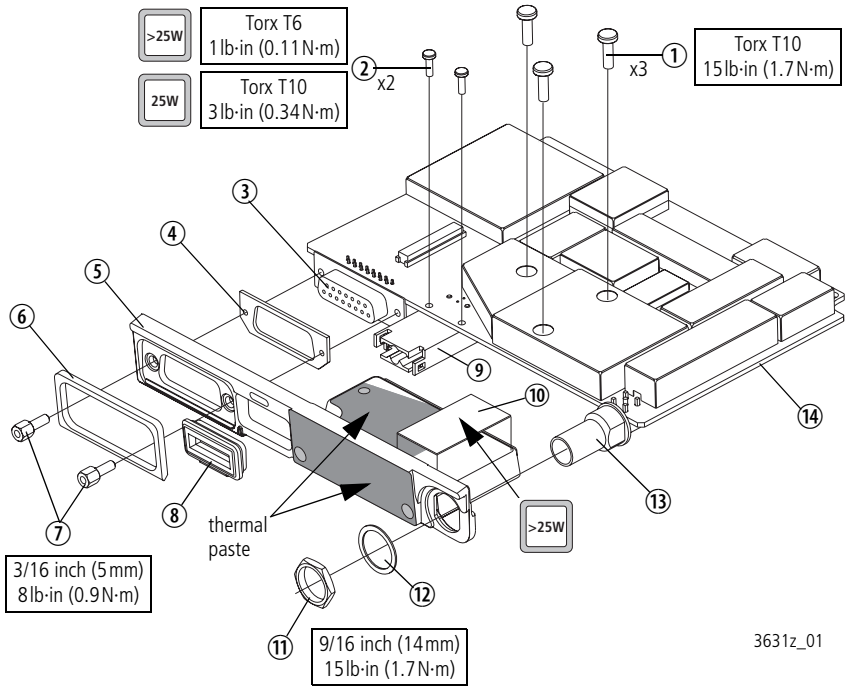

1. M3x10 screw (x3)
2. >25W radios: M2.2x10 PT screw (x2)
   25W radios: K30x8 PT screw (x2)
3. auxiliary connector
4. inner foam D-range seal
5. heat-transfer block
6. outer foam seal
7. D-range screwlock fastener (2x)
8. power connector seal
9. power connector
10. gap pad (>25W radio only)
11. RF connector nut
12. RF connector lock washer
13. RF connector
14. main board

© Tait Electronics Limited November 2007

Removing an Options Board (Optional)

The radio may be fitted with an options board in the lid assembly, which may or may not have an external options connector fitted in a provision in the lid assembly.

The circled numbers in this section refer to the items in Figure 5.5.

1. If an external options connector is fitted:
   - Undo the two screws ① and remove the protective rubber cap ② (if fitted).
   - Undo the two D-range screwlock fasteners ③.
2. Undo up to nine screws ⑦ and remove the options board ⑥ from the lid assembly ④.
3. If an external options connector is fitted, a foam seal for the D-range connector ⑤ is fitted to the inside of the lid. Remove the foam seal only if it is damaged.

Reassembly is carried out in reverse order of the disassembly.

Figure 5.5 Removing an options board

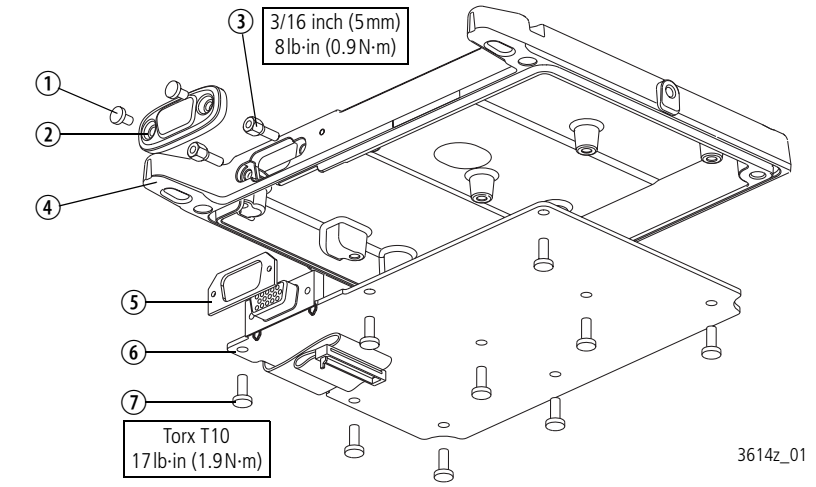

① screw 4-40x3/15 (x2)
② protective rubber cap
③ D-range screwlock fastener 4-40 (x2)
④ lid assembly
⑤ foam seal for D-range connector
⑥ options board (example)
⑦ screw M3x10, self-tapping (x9)

© Tait Electronics Limited November 2007

5.3 Reassembling the Radio Body

Inspect all disassembled parts for damage and replace them, if necessary.

Reassembling the Main-Board Assembly

The circled numbers in this section refer to the items in Figure 5.4 on page 141. This figure shows the >25 W configuration.

1. If the power connector has been replaced:

   >25W 25W

   - With the >25 W radio, use a Torx T6 torque-driver to tighten the two screws ② to 1 lb·in (0.11 N·m).
   - With the 25 W radio, use a Torx T10 torque-driver to tighten the two screws ② to 3 lb·in (0.34 N·m).

2. If the outer foam seal ④ or the inner foam D-range seal ⑥ have been removed, fit new seals to the heat-transfer block ⑤.

   >25W

3. With the >25 W radio, the rectangular gap pad ⑩ must be replaced each time the heat-transfer block ⑤ is separated from the main board ⑭:
   - Remove any residue of the old rectangular gap pad from the underside of main board and the heat-transfer block.
   - Peel off the transparent film on one side of the gap pad and evenly press the gap pad on the contact surface of main board (refer to Figure 5.6).
   - Peel off the transparent film on other of the gap pad.

Figure 5.6 Contact surfaces on the bottom side of the main board

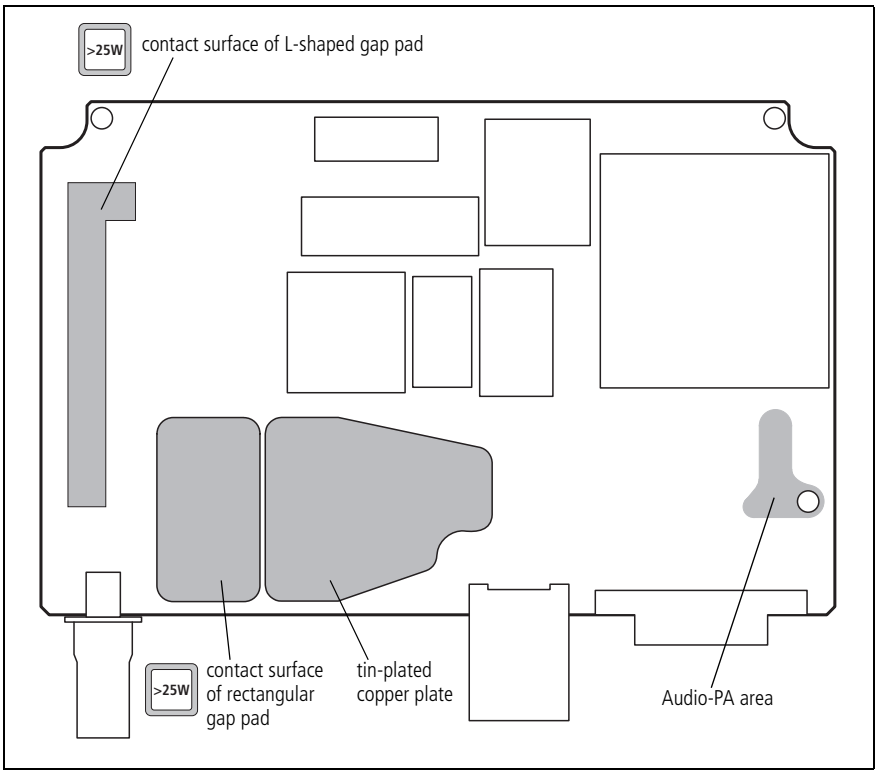

4. If the thermal paste on the heat-transfer block ⑤ or the tin-plated cooper plate of the main board ⑭ has been contaminated, new thermal paste must be applied:
   - Remove any residue of the old thermal paste from both contact surfaces.
   - Use Dow Corning 340 silicone heat-sink compound (IPN 937-00000-55).

Important Ensure that no bristles from the brush come loose and remain embedded in the paste. The paste needs to be completely free of contaminants.

   - Use a stiff brush to apply 0.1 cm^3 of thermal paste over the complete contact surface on the tin-plated copper plate (refer to Figure 5.6 on page 143).

5. Place the main board ⑭ in position on the heat-transfer block ⑤, and push them together to spread the thermal paste.

Important You must observe the following order of assembly to ensure that the main board and the connectors are not assembled under stress.

6. Use a torque-driver with a 3/16 inch (5 mm) socket to fasten the D-range screwlock fasteners ⑦ to 8 lb·in (0.9 N·m).
7. Fit the RF connector lock washer ⑫. Use a torque-driver with a 9/16 inch (14 mm) long-reach socket to fasten the RF connector nut ⑪ to 15 lb·in (1.7 N·m).
8. Use a torque-driver with a Torx T10 bit to fasten the three screws ① to 15 lb·in (1.7 N·m).
9. Loosen both the D-range screwlock fasteners ⑦ and the RF connector nut ⑪.
10. Re-tighten both the D-range screwlock fasteners ⑦ and the RF connector nut ⑪ to the torques indicated in steps 7 and 8.
11. Fit the power connector seal ⑧.

© Tait Electronics Limited November 2007

Fitting the Main-Board Assembly to the Chassis

The circled numbers in this section refer to the items in Figure 5.3 on page 139. This figure shows the >25 W configuration.

>25W

1. With the >25 W radio, the L-shaped gap pad ⑩ must be replaced each time the main-board assembly ⑤ is removed from the chassis ⑥:
   - Remove any residue of the old gap pad from the audio-PA area on the underside of the main board (refer to Figure 5.6 on page 143) and the L-shaped ridge of the chassis (refer to Figure 5.3 on page 139).
   - Peel off the transparent film on one side of the gap pad and evenly press the gap pad on the L-shaped ridge of the chassis.
   - Peel off the transparent film on other of the gap pad.
2. If the thermal paste on the heat-transfer block or the underside of the main board has been contaminated, new thermal paste must be applied:
   - Remove any residue of the old thermal paste from both contact surfaces.
   - Use Dow Corning 340 silicone heat-sink compound (IPN 937-00000-55).

Important Ensure that no bristles from the brush come loose and remain embedded in the paste. The paste needs to be completely free of contaminants.

   - Use a stiff brush to apply 0.1 cm^3 of thermal paste on the heat-transfer block (refer to Figure 5.3 on page 139).
   - Use a stiff brush to apply 0.01 cm^3 of thermal paste on the audio-PA heat sink of the chassis (refer to Figure 5.3 on page 139)
3. Place the main-board assembly ⑤ in position in the chassis ⑥.
4. Loosely screw in the two screws ⑧ through the heat-transfer block by hand.

© Tait Electronics Limited November 2007

5. While pressing down firmly on the diagonal edge of the PAD TOP can (refer to Figure 5.7), use a Torx T20 torque-driver to tighten the two screws ⑧ to 22lb·in (2.5N·m). This will ensure that the main board is seated correctly on the bosses for the five internal screws ④.

Figure 5.7 PAD TOP can on the top side of the main board

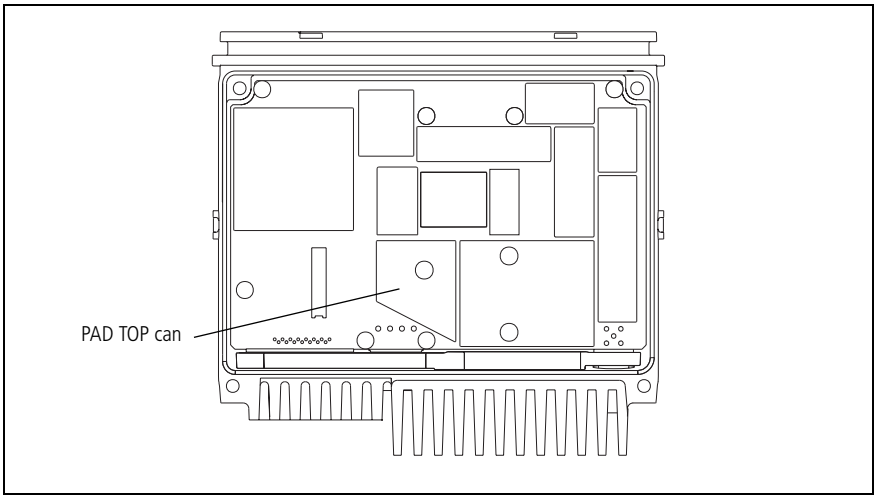

6. Clean off any excess thermal paste on the heat-transfer block.

7. Screw in the five screws ④ through the main board by hand as far as possible. Use a Torx T10 torque-driver to tighten the screws to 17lbf·in (1.9N·m).

8. Fit the RF connector seal ⑨. Ensure that the seal is properly seated around its entire periphery.

9. If an auxiliary connector bung ⑦ was fitted, fit the bung.

Closing the Radio Body

The circled number in this section refer to the items in Figure 5.3 on page 139.

1. If an internal options board is fitted inside the lid, connect the loom to the internal options connector.

2. Inspect the main seal in the lid for damage, and replace if necessary.

3. Place the lid assembly ③ on the chassis ⑥.

4. Use a Torx T20 torque-driver to tighten the four screws ② to 22lbf·in (2.5N·m).

5. Slide the cover ① over the radio body and snap holes in the side of the cover over the screw bosses.

6. Inspect the control-head seal for damage, and replace if necessary.

© Tait Electronics Limited November 2007

5.4 Disassembling and Reassembling the Control Head

5.4.1 Control Head with Graphical Display

Disassemble only as much as necessary to replace the defective parts. Reassembly is carried out in reverse order of the disassembly.

The circled numbers in this section refer to the items in Figure 5.9 on page 149.

The connectors of the control-head board and the orientation of the speaker and speaker clamp are illustrated in Figure 5.8.

1. With your fingers, pull off the volume control knob ⑰.
   Do not use any tools as this might cause damage.

2. Unscrew the two screws ① and remove the adaptor flange ②.

3. Disconnect the control-head loom ③.

4. If an optional circuit board is fitted, unplug it from the control-head board ⑤ (refer to Figure 5.8).

5. Note whether the speaker is connected or disconnected. If it is connected, disconnect the speaker cable from the speaker connector of the control-head board ⑤ (refer to Figure 5.8). Note that the radio must be returned to the customer in its original configuration.

6. Release the lock of the LCD connector and unplug the loom of the LCD assembly ⑫ (refer to Figure 5.8). Note that the loom runs through a slot in the space frame ⑨.

Figure 5.8 Speaker orientation and connectors of the control-head board (graphical display)

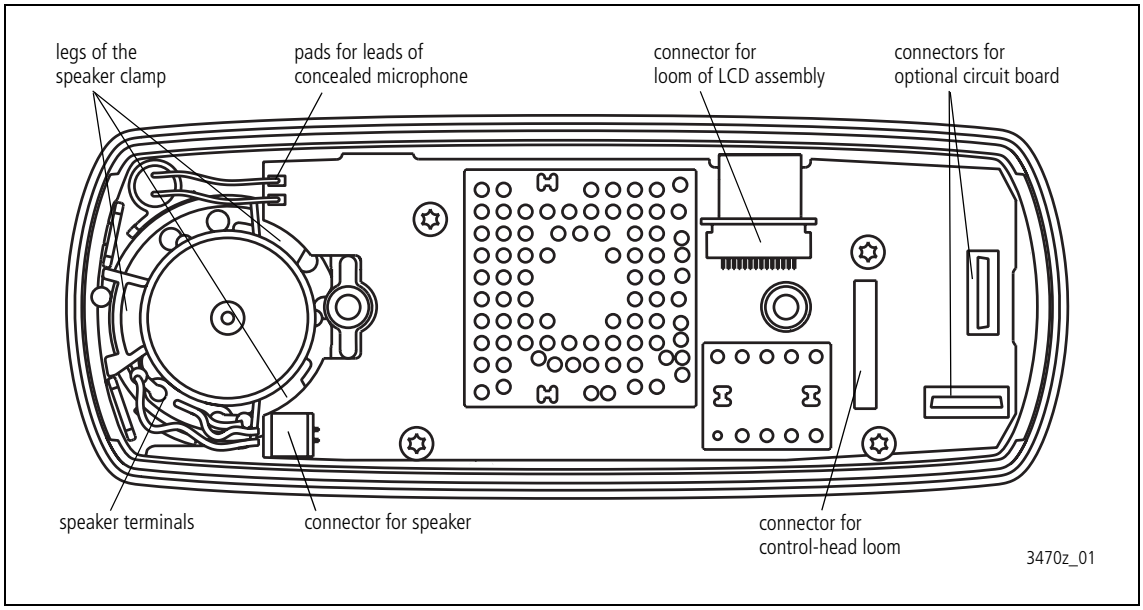

7. Unscrew the four screws ④ and remove the control-head board ⑤.

8. If a concealed microphone is fitted, pull the concealed microphone ⑮ capsule out of its rubber seal when removing the control head-board ⑤. If necessary, unsolder the leads from the pads on the control-head board (refer to Figure 5.8).

9. Remove the light pipes ⑦ and ⑧.

10. The space frame ⑨ clips into three clips of the front panel. Unclip the spaceframe and remove it along with the two seals ⑥. Check the seals ⑥ and replace them, if necessary.

11. Remove the speaker ⑪ and speaker clamp ⑩.

Important When fitting the speaker and the speaker clamp, observe the orientation of the speaker terminals. Make sure that the larger of the three legs of the speaker clamp is placed between the two clips of the front panel assembly as shown in Figure 5.8 on page 147.

12. Remove the LCD assembly ⑫, main keypad ⑬, and power keypad ⑭.

Important When replacing the LCD, carefully remove the protective plastic film from the LCD. Take care not to scratch the soft polarizer material on the top side of the LCD.

The LCD seal is replaced whenever the LCD is replaced.

© Tait Electronics Limited November 2007

Figure 5.9 Components of the control head (graphical display)

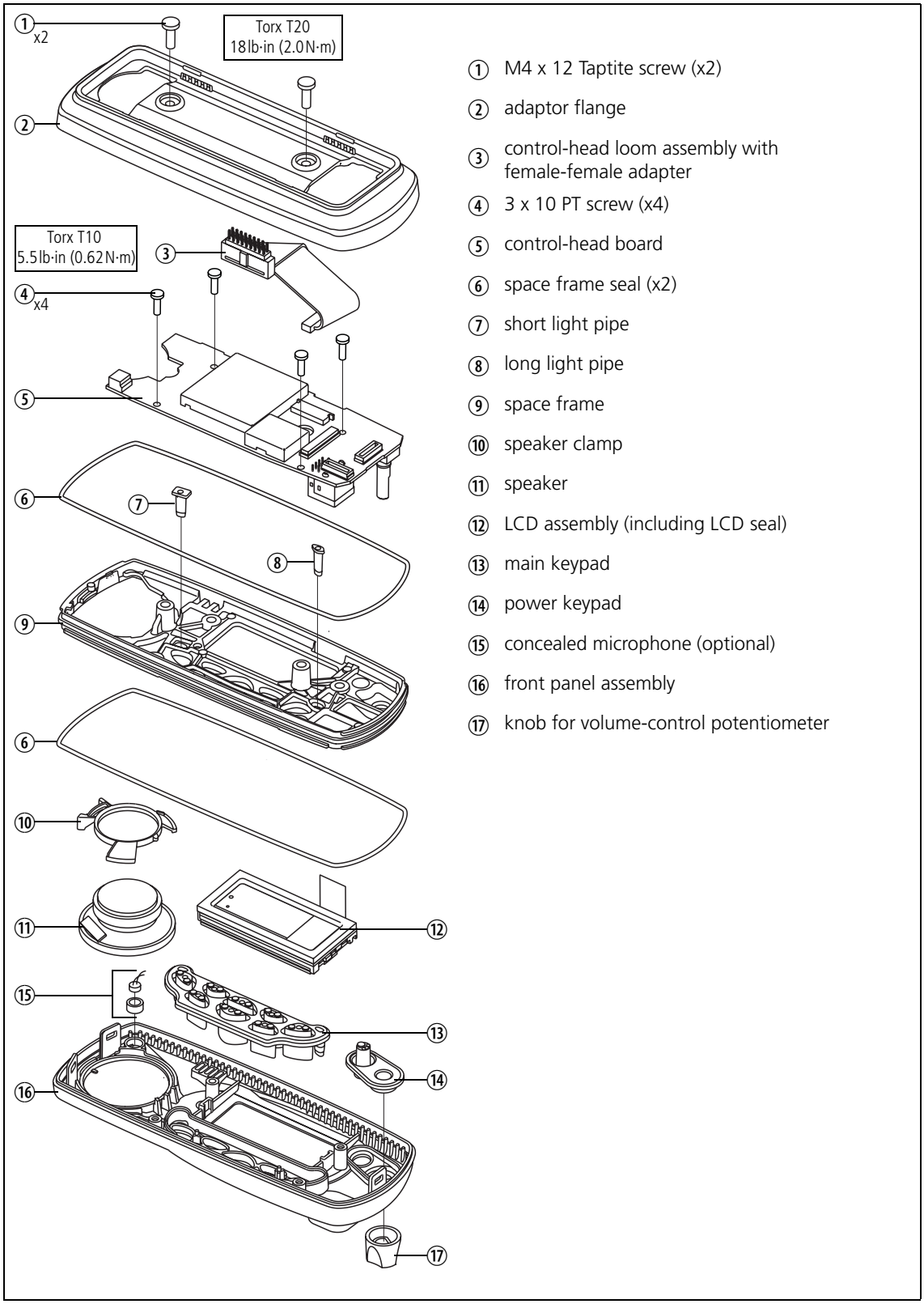

© Tait Electronics Limited November 2007

5.4.2 Control Head with 1-, 2- or 3-Digit Display

Disassemble only as much as necessary to replace the defective parts. Reassembly is carried out in reverse order of the disassembly.

The circled numbers in this section refer to the items in Figure 5.11 on page 151.

1. With your fingers, pull off the volume control knob ⑮. Do not use any tools as this might cause damage.
2. If an optional circuit board ② for a concealed microphone is fitted, unplug it from the control-head board ④ (refer to Figure 5.10).
3. If a concealed microphone ⑬ is fitted, unsolder the microphone leads from the control-head board. The leads are soldered to pads on the board as shown in Figure 5.10.
4. Note whether the speaker ⑧ is connected or disconnected. If it is connected, disconnect the speaker cable from the speaker connector of the control-head board (refer to Figure 5.10). Note that the radio must be returned to the customer in its original configuration.
5. Use a Torx T10 screwdriver to unscrew the three screws ③ securing the control-head board. The screws are labelled screw 1 to screw 3; these numbers are also inscribed on the PCB. The control-head board is now held down only by the clips labelled clip 1 to clip 3 in Figure 5.10.
6. While pressing on the shaft of the volume-control potentiometer, push clip 2, clip 1 and then clip 3 away from the control-head board. The board will be freed from the space frame. Remove the board.

Figure 5.10 Speaker orientation, connectors and clips of the control-head board (1-, 2- or 3-digit display)

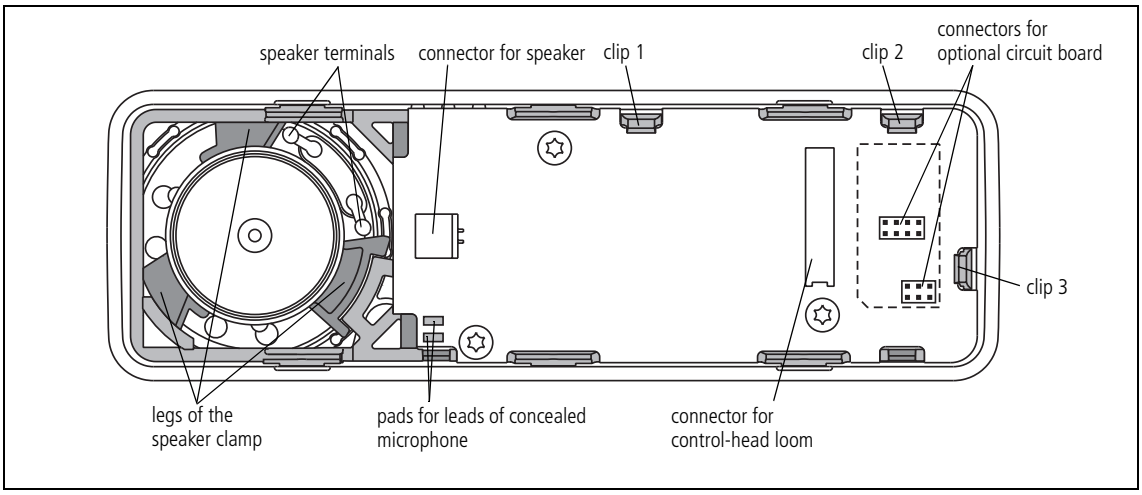

© Tait Electronics Limited November 2007

7. While pulling upwards on the space frame ⑥ at the corner where the microphone connector is situated, release the clips labelled ❶ to ❻ in Figure 5.11 in the order: ❶ and ❷, ❸ and ❹, and then ❺ and ❻. To release each clip use a 3/16 inch (5 mm) flat-bladed screwdriver to lever the clip out of its recess. Pulling on the space frame helps release the clips.

Important When fitting the space frame ⑥, make sure that the clips labelled ❶ to ❻ fully snap into the front panel assembly. If necessary, use a flat-bladed screwdriver to push down the clips until they snap into place.

Figure 5.11 Components of the control head (1-, 2- or 3-digit display)

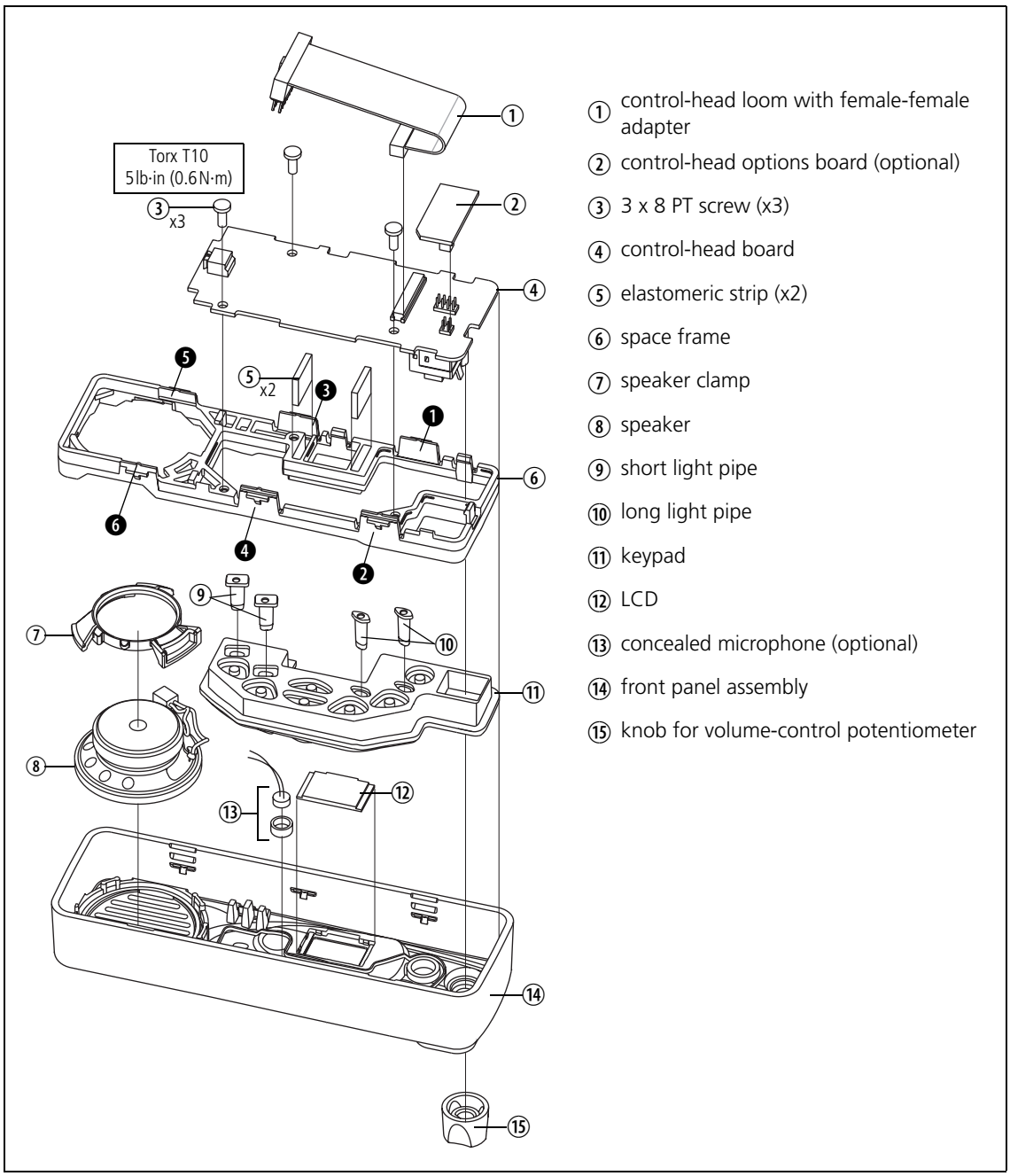

8. Remove the elastomeric strips ⑤, speaker clamp ⑦[1], speaker ⑧, LCD ⑫, keypad ⑪, lightpipes ⑨ and ⑩, and, if fitted, the concealed microphone ⑬.

Important When replacing the LCD, carefully remove the protective plastic film from the LCD. Take care not to scratch the soft polarizer material on the top side of the LCD.

Important When fitting the speaker and the speaker clamp, observe the orientation of the speaker terminals. Make sure that the legs of the speaker clamp are positioned under the space frame as shown in Figure 5.10 on page 150.

1. The speaker clamp ⑦ and a new space frame ⑥ were introduced in April 2007.

© Tait Electronics Limited November 2007

5.4.3 RJ45 Control Head

Disassemble only as much as necessary to replace the defective parts. Reassembly is carried out in reverse order of the disassembly.

The circled numbers in this section refer to the items in Figure 5.12.

1. Release the clip of the PCB bracket ④ and remove the control-head board ①.

2. Disconnect the control-head loom ② from the control-head-board ①.

3. Use a Torx T10 screwdriver to unscrew the four screws ③ and remove the PCB bracket ④.

Figure 5.12 Components of the RJ45 control head

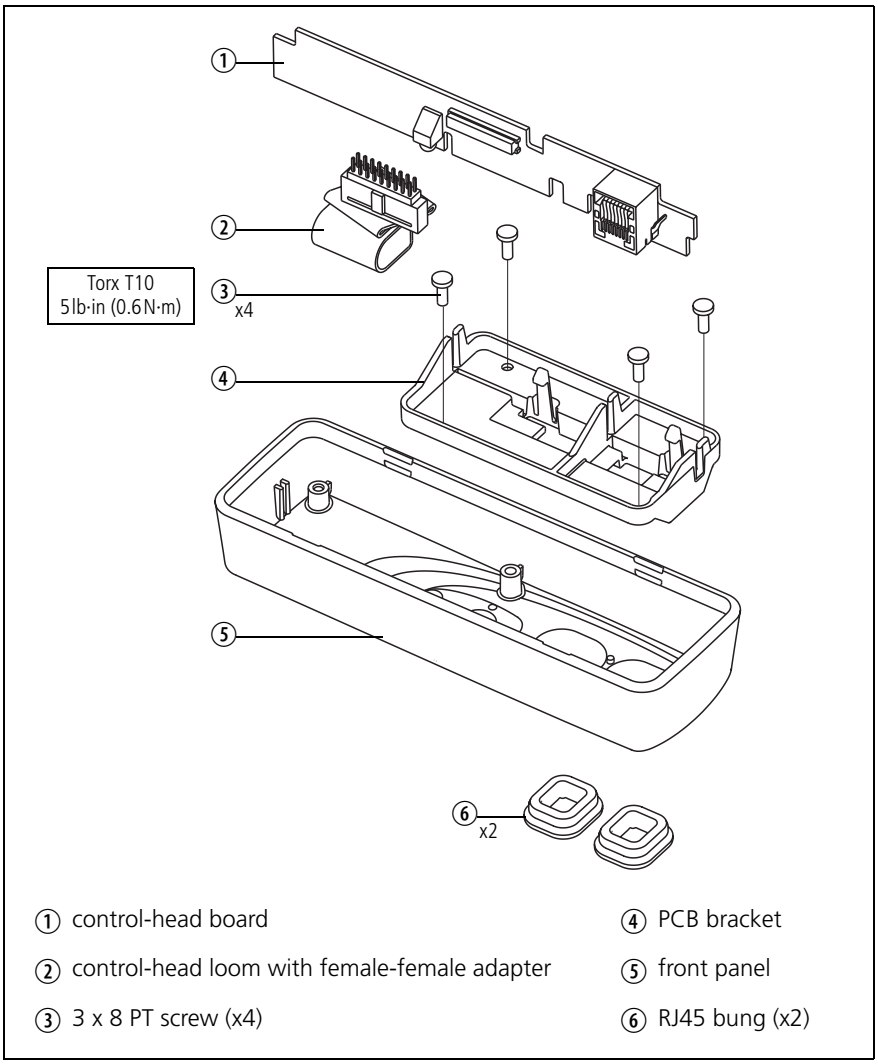

5.4.4 Blank Control Head

Disassemble only as much as necessary to replace the defective parts. Reassembly is carried out in reverse order of the disassembly.

The circled numbers in this section refer to the items in Figure 5.13.

1. Note whether the cover seal ② is fitted or not. If it is fitted, remove the two screws ① and remove the cover seal. Note that the radio must be returned to the customer in its original configuration.

2. Note whether an options board (not shown) is fitted inside the control head. If a an options board is fitted, remove the screws and remove the options board.

3. Remove the lock-nuts ③ and remove the foam seal ⑤ and the control head loom ⑥.

Figure 5.13 Components of the blank control head

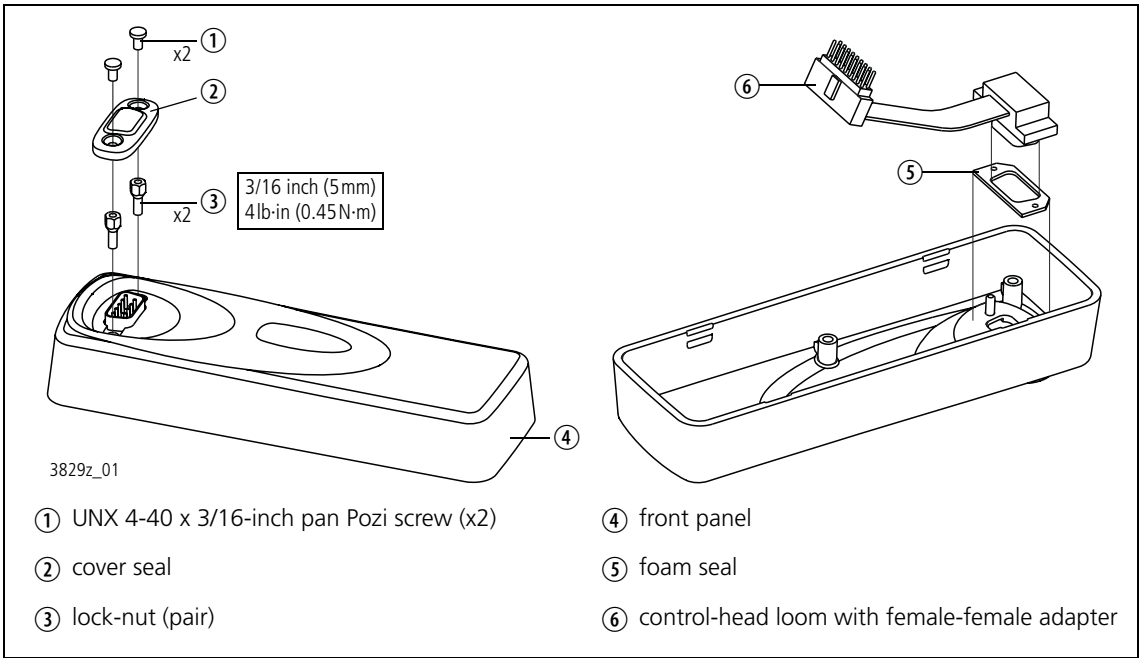

© Tait Electronics Limited November 2007

6 Servicing Procedures

Scope of Section

This section gives the full sequence of tasks required when servicing a particular radio. These tasks are:

- initial inspection, visual inspection and fault diagnosis
- repair, final inspection, test and administration.

For disassembly and reassembly instructions, refer to "Disassembly and Reassembly" on page 135.

6.1 Initial Tasks

List of Tasks

The following tasks need to be carried out for **all** radios:

- initial administration
- visual inspection
- powering up the radio
- reading the programming file
- obtaining the details of the Software Feature Enabler (SFE)
- reading the calibration file
- checking the user interface
- checking any error messages.

The following tasks only need to be carried out if they relate to the fault reported:

- checking the transmit and transmit-audio functions
- checking the receive and receive-audio functions.

Important Observe the "General Information" on page 107.

Task 1 — Initial Administration

When a radio is received for repair, details of the Customer and the fault will be recorded in a fault database. The fault reported by the Customer might concern damage to or loss of a mechanical part, or the failure of a function of the radio, or both.

Task 2 — Visual Inspection

Check the radio for mechanical loss or damage, even if the fault concerns a function failure only. Inspect the radio as follows:

- knob for volume-control potentiometer
- microphone grommet
- rubber seal for RF connector
- bung for auxiliary connector
- bung for aperture for external options connector.

© Tait Electronics Limited November 2007

The bung for aperture for external options connector should be replaced by a cover seal if an external options connector is present. All the parts are illustrated in "Spare Parts" on page 455. Except for the microphone grommet, if any of these parts is missing or damaged, replace it as described below. In the case of the microphone grommet, refer to the accessories section for the repair procedure.

Replace Damaged or Missing Knob

Remove the volume-control knob if it is damaged. Push the replacement knob onto the shaft of the volume-control potentiometer. Ensure that the knob turns freely.

Replace Damaged or Missing Seals and Bungs

Remove any damaged seal or bung. Obtain a replacement seal for the RF connector or a replacement bung from Spares kit 2. Order a replacement cover seal (and screws) from TEL; the IPNs of the parts are listed in "Spare Parts" on page 455. In fitting a replacement bung, ensure that it is not upside down and that it is properly seated. To fit the seal for the RF connector, first fit the upper part of the seal and then press down around the sides of the seal to the bottom. Ensure that the seal is properly seated around its entire periphery.

Check for Additional Damage

Also check for damage to exterior parts that can be replaced only by partly disassembling the radio. These parts are:

- cover assembly for radio body
- keys, lens and LCD of control head
- front panel of control head.

In the case of the front panel, inspect particularly the light pipes for the STATUS LEDs and the membrane behind the speaker grille. If the radio is reported to have a functional fault, continue with Task 3. Any additional mechanical damage will be repaired during the course of rectifying the functional fault. If the radio has no functional fault, repair any additional damage as described below; conclude with the tasks of "Final Tasks" on page 163.

Repair Damaged Control Head

If the control head is damaged, detach it from the radio body as described in "Removing and Mounting the Control Head" on page 136.
The procedure includes inspecting the interior of the control head for evidence of other damage. Disassemble the control head and repair all damage as described in "Disassembling and Reassembling the Control Head" on page 147. Then re-assemble the control head and re-attach it to the radio body.

© Tait Electronics Limited November 2007

Task 3 — Power Up the Radio

With the radio connected to the test equipment as described in "Setting up the Test Equipment" on page 115, attempt to power up the radio.

1. Apply power to the radio. If the radio is programmed not to start on power-on, press the ON/OFF switch.

Note If the radio powers up but keeps resetting itself, check the power-sensing circuitry. If the radio powers up but fails to enter user-mode, or displays an error, refer to Table 6.1 on page 160.

2. If the radio powers up successfully, go to Task 4. If it does not, go to Step 3.
3. Check the fuses, cables, and the power supply.
4. Check whether the control-head loom, the control head or the radio body is faulty by first connecting a spare control-head loom and then a spare control head.
5. If the control head is faulty, check the control-head connector (pin 2: +13V8, pin 14: +3V3, pin 6: AGND), and repair or replace the control-head board.
6. If the repair succeeded without the need for replacing the main-board assembly, go to Task 4. Otherwise continue with Step 7.
7. If the main-board assembly was replaced or if the repair failed, re-assemble the radio as described in "Disassembly and Reassembly" on page 135. Conclude with the tasks of "Final Tasks" on page 163.

© Tait Electronics Limited November 2007

Task 4 — Read the Programming File

Given that the radio powers up, the next task is to read the radio's programming file or upload a default file.

1. Use the programming application to read the programming file.

2. If the programming file can be read, save a copy on the test PC, and go to Task 5. If not, go to Step 3.

3. If it seems that the file cannot be read, cycle the power to the radio and again attempt to read the file. First cycling the power is essential if the radio is programmed to power up in transparent-data mode (both 1200 baud FFSK and Tait high-speed data) and if the selected data port is the microphone connector (control head with user interface) or programming connector (blank control head).

4. If the programming file cannot be read, check whether:
   - the radio is connected to the correct serial port of the test PC,
   - the Mode switch of the test unit is set to Rx,
   - the programming application is set-up correctly. Refer to the troubleshooting section of the online help.

5. If the programming file can be read now, save a copy on the test PC, and go to Task 5. If not, go to Step 6.

6. Check whether the control-head loom, the control head or the radio body is faulty by first connecting a spare control-head loom and then a spare control head.

7. If the control head is faulty, check:
   - the control-head connector (pin 3: TXD, pin 7: RXD),
   - the microphone or programming connector,
   - the path between the control-head connector and the microphone or programming connector,

   and repair or replace the control-head board.

8. If the repair succeeded without the need for replacing the main-board assembly, go to Step 9. Otherwise continue with Step 10.

9. If the programming file can be read now, save a copy on the test PC, and go to Task 5. If the file still cannot be read, go to Step 10.

10. Set up a suitable default programming file and attempt to upload it to the radio

11. If the upload succeeds, go to Task 6. If the upload fails, continue with Step 12.

12. If the main-board assembly was replaced or if the repair failed, re-assemble the radio as described in "Disassembly and Reassembly" on page 135. Conclude with the tasks of "Final Tasks" on page 163.

© Tait Electronics Limited November 2007

Task 5 — Obtain the Details of the Software Feature Enabler (SFE)

Use the programming application to obtain and record the details of any software-enabled features (*Tools > Optional Features*).

For more information refer to the online help of the programming application.

Task 6 — Read the Calibration File

Use the calibration application to read the calibration file and save it on the test PC. If the calibration file cannot be read, set up a suitable default calibration file and load it to the radio

Task 7 — Check the User Interface

Check the user interface as follows (This task does not apply to the blank control head):

1. Use the programming application to activate backlighting, deactivate silent and quiet modes, and view the programmed function keys, channels and scan groups.

2. Turn on the radio, make sure that the volume control is not set to low, and check the start-up sequence:
   - the LEDs light up red briefly
   - the speaker gives two short beeps
   - LCD and keypad backlighting activates
   - the LCD displays a power-up message then a channel number, or an error message.

3. Check the following elements of the user interface:
   - volume control: With the graphical display, use CCTM command *1010* to read the volume potentiometer. The returned value should be between 0 and 255.
   - LCD: Check visually or, with the graphical display, use CCTM command *1006 1* to switch on all LCD elements. Power-cycle the radio to reset the LCD to its original state.
   - PTT key: With the graphical display, while pressing the PTT key, the transmit symbol or should appear on the radio display (unless transmit is inhibited on the selected channel).
   - scroll and selection keys: Scroll through all settings and observe the radio display.
   - function keys: Check whether the programmed function is activated.
   - keypad: With the graphical display, use CCTM command *1009 1* to turn on keypad notification. Check that each keypress returns a different number. CCTM command *1009 1* turns keypad notification off.
   - backlighting (if programmed): Any keypress should activate backlighting.

© Tait Electronics Limited November 2007

4. If there is a fault in the user interface, repair the radio as described in "Fault Finding of Control Head with Graphical Display" on page 423 or "Fault Finding of Control Head with 1-, 2- or 3-Digit Display" on page 447.

5. If there is no fault, go to Task 8.

Task 8 — Check Error Messages

The radio may display an error message. Carry out the corrective actions described in Table 6.1.

Table 6.1 Error messages

Error message	Corrective action
Error E0001 Unknown	Turn the radio off and then back on.
Error E0002 Unknown	Continue with servicing tasks to locate the problem.
Error E0003 Corrupt FW	Re-download the radio's firmware.
Error E0008 System error 0x*abcdefgh*	Turn the radio off and then back on. If the system error persists, download new radio firmware. To capture details of the system error, use CCTM command *204*.
Temperature threshold exceeded	Wait until the radio has cooled down.
Cannot tx	Go to Task 9 on page 161.
Out of lock	Go to "Frequency Synthesizer Fault Finding" on page 185.
Programming mode, invalid radio ...	Re-program the radio with a new programming database. If the problem persists, update or reload the radio's firmware, and re-program the radio's calibration database.

© Tait Electronics Limited November 2007

Task 9 — Check the Transmit and Transmit-Audio Functions

If the radio does not transmit, this can be caused by:

- the synthesizer not being in lock
- no or wrong carrier power
- no modulation.

If the cause is already known, go directly to the relevant fault-finding section.

Caution **Observe the servicing precautions for transmitter issues listed on page 113.**

1. Use CCTM command *101 x y 0* to set the transmit frequency to the bottom of the band.
2. Use CCTM command *33* to set the radio to transmit mode.
3. Use CCTM command *72* to read the lock status.
4. If the synthesizer is in lock, go to Step 5. If the synthesizer is not in lock, repair the radio as described in "Frequency Synthesizer Fault Finding" on page 185.
5. Repeat Step 1 to Step 4 with the transmit frequency set to the top of the band.
6. Use CCTM command *326 1* to set the power level to very low.
7. Connect a power meter and measure the transmit power.
8. If the carrier power is correct, go to Step 10. If the carrier power is not correct, try to re-calibrate the radio.
9. If the re-calibration repairs the fault, go to "Final Tasks" on page 163. If it does not, repair the radio as described in "Transmitter Fault Finding (>25 W)" on page 267 and "Transmitter Fault Finding (25 W)" on page 341.
10. Repeat Step 6 to Step 9 with the power level set to high (*326 4*).
11. Check whether the speaker is the source of the fault, as described in "Speaker Faulty" on page 440 (graphical display) or "Speaker Faulty" on page 454 (1-, 2- or 3-digit display).
12. If the radio transmits audio now, the original speaker was faulty. Reassemble the radio and go to "Final Tasks" on page 163. If the radio still fails to transmit, reconnect the original speaker and go to Step 13.
13. After having eliminated the synthesizer, the transmitter circuitry, and the speaker as cause for the fault, repair the radio as described in "CODEC and Audio Fault Finding" on page 399.

© Tait Electronics Limited November 2007

14. If the main-board assembly was replaced or if the repair failed, re-assemble the radio as described in "Disassembly and Reassembly" on page 135. Conclude with the tasks of "Final Tasks" on page 163.

Task 10 — Check the Receive and Receive-Audio Functions

If the radio does not receive, this can be caused by:

- the synthesizer not being in lock
- no carrier detected
- a faulty speaker or volume control
- no modulation.

If the cause is already known, go directly to the relevant fault-finding section.

1. Use CCTM command *101 x y 0* to set the receive frequency to the bottom of the band.
2. Use CCTM command *72* to read the lock status.
3. If the synthesizer is in lock, go to Step 5. If the synthesizer is not in lock, repair the radio as described in "Frequency Synthesizer Fault Finding" on page 185.
4. Repeat Step 1 to Step 3 with the receive frequency set to the top of the band
5. Feed a signal without modulation on the receive channel at –47 dBm. Check for maximum RSSI using:
   - the indicator on the radio display (graphical display)
   - the green status LED
   - CCTM command *63* should return the fed signal strength ±1 dBm.
6. Repeat the check in Step 5 with –117 dBm. The RSSI indicator should show as empty or close to empty (graphical display).
7. If the carrier is detected correctly, go to Step 9. If the carrier is not detected correctly, try to re-calibrate the radio.
8. If the re-calibration repairs the fault, go to "Final Tasks" on page 163. If it does not, repair the radio as described in "Receiver Fault Finding" on page 247.
9. Check whether the speaker is the source of the fault, as described in "Speaker Faulty" on page 440 (graphical display) or "Speaker Faulty" on page 454 (1-, 2- or 3-digit display).
10. If the radio receives audio now, the original speaker was faulty. Reassemble the radio and go to "Final Tasks" on page 163. If the radio still fails to receive, reconnect the original speaker and go to Step 11.
11. Use CCTM command *804* to read the status of the volume potentiometer.

© Tait Electronics Limited November 2007

12. If the volume potentiometer is faulty, repair it as described in "Volume Control Faulty" on page 442 (graphical display) or "Volume Control Faulty" on page 454 (1-, 2- or 3-digit display). If it is not faulty, go to Step 13.

13. After having eliminated the synthesizer, the receiver circuitry, the speaker, and the volume potentiometer as cause for the fault, repair the radio as described in "CODEC and Audio Fault Finding" on page 399.

14. If the main-board assembly was replaced or if the repair failed, re-assemble the radio as described in "Disassembly and Reassembly" on page 135. Conclude with the tasks of "Final Tasks" on page 163.

6.2 Final Tasks

List of Tasks

The following tasks need to be carried out for **all** radios:

- repair
- enable software features (if applicable)
- final inspection
- final test
- final administration.

Task 1 — Repair

The fault diagnosis will have resulted in the repair or replacement of the main-board assembly. This section describes the steps after completion of the fault diagnosis:

1. Use the programming and calibration applications to load the programming and calibration files read or set-up in "Initial Tasks".

Note If the radio had to be reprogrammed with a default programming file, the following additional actions are required: If the radio is to be returned direct to a Customer who has **no** programming facilities, the appropriate programming file needs to be obtained and uploaded (or the data obtained to create the file). If the radio is to be returned to a Dealer or direct to a Customer who does have programming facilities, the Dealer or Customer respectively need to be informed so that they can program the radio appropriately.

Note If the main-board assembly has been replaced, certain software features may need to be enabled before the programming file can be loaded. See Task 2 on page 164.

2. Test the radio as described in "Final Test" on page 165.
It may be necessary to also re-calibrate to make the radio functional, in particular if the main-board assembly had to be replaced or if a default calibration file had to be loaded. Refer to the online help of the calibration application.

© Tait Electronics Limited November 2007

3. If the main-board assembly has been replaced, level-1 service centres should return the faulty board to the nearest ASC, and level-2 service centres should return the board or assembly to the ISC, if deemed necessary. Supply details of the fault and, if applicable, the attempted repair. Go to step Step 6.

   If the main-board assembly has **not** been replaced, go to Step 4.

4. Replace any cans removed. Refer to "Shielding Cans and Connectors" on page 119.

5. Re-test the radio as described in "Final Test" on page 165.

6. Reassemble the radio as described in "Disassembly and Reassembly" on page 135.

7. Reconnect the radio to the test equipment and carry out a final calibration of the radio. Refer to the online help of the calibration application.

Task 2 — Enable Software Features (SFE)

If the main-board assembly has been replaced, ensure that the correct software features, if any, are enabled for the Customer. If software features need to be enabled, a special licence file is required for the replacement main-board assembly. The file must allow for the enabling of the same software features as in the original assembly. Proceed as follows:

1. If it was possible to read the software features in "Obtain the Details of the Software Feature Enabler (SFE)" on page 159, go to Step 2. If it was not possible, go to Step 3.

2. Reading the software features reveals if any software features are enabled for the radio under repair. If there are, go to Step 3. If there are none, go to Task 3.

3. Technicians **not** at a CSO should contact their CSO regarding the radio's software features. Technicians at CSOs should contact Technical Support at TEL.

4. Supply the serial number of the radio under repair, and the serial number of the replacement main-board assembly (located on a label on the main-board assembly).

5. If it is known that the radio had software features enabled, go to Step 6. Otherwise go to Step 7.

6. Ask the CSO (or TEL) for a licence file for the replacement main-board assembly. The CSO will supply the required file. Go to Step 8.

7. Ask the CSO (or TEL) if the radio under repair had any software features enabled, and if so, to send a licence file for the replacement main-board assembly. The CSO (or TEL) will either indicate that the radio had no software features enabled or supply the required file. If the radio had no software features enabled, go to Task 3. If the required file was supplied, go to Step 8.

© Tait Electronics Limited November 2007

8. On receiving the licence file, run the programming application on the test PC. On the menu bar click *Tools* > *Optional Features*. The *Software Feature Enabler* dialog appears.

9. Use the licence file to enable the appropriate software features. The procedure is given in the on-line help facility under the heading *Enabling a feature*. Go to Task 3.

Task 3 — Final Inspection

Make a final inspection of the exterior to check that no mechanical parts have been damaged during the repair. Repeat the inspection given in "Visual Inspection" on page 155. Rectify any damage.

Task 4 — Final Test

Test the radio to confirm that it is fully functional again. The recommended tests are listed in Table 6.2 to Table 6.4. (The calibration application can be used for many of these tests.) It is good practice to record the test results on a separate test sheet. A copy of the test sheet can be supplied to the Customer as confirmation of the repair.

Task 5 — Final Administration

The final administration tasks are the standard workshop procedures for updating the fault database and returning the repaired radio to the Customer with confirmation of the repair.

If the radio could not be repaired for one of the following reasons:

- fault not located
- repair of fault failed
- required repair is level-3 repair.

Level-1 service centres should return the faulty radio to the nearest ASC, and level-2 service centres should return the radio to the ISC. Supply details of the Customer, the fault and, if applicable, the attempted repair.

© Tait Electronics Limited November 2007

Table 6.2 Final tests of transmitter function

	Test	Limits
	Error in transmit frequency	+100 Hz to –100 Hz
25W	Transmit power (25 W radios): • High • Medium • Low • Very low	 23.2 W to 29.2 W 11.1 W to 14.0 W 4.6 W to 5.8 W 0.9 W to 1.2 W
25W	Current at high power (25 W radios): • A4-band radios • B1-band radios • C0-band radios • D1-band radios • H5-band radios • H6-band radios	 < 5.5 A < 5.5 A < 5.5 A < 5.5 A < 6.5 A < 6.5 A
>25W	Transmit power (>25 W radios): • High — B1-band — G2-band — H5-band — H7-band — K5-band • Medium — B1-band — G2-band — H5-band — H7-band — K5-band • Low — B1-band — G2-band — H5-band — H7-band — K5-band • Very low — B1-band — G2-band — H5-band — H7-band — K5-band	 46.3 W to 58.3 W 37.1 W to 46.7 W 37.1 W to 46.7 W 37.1 W to 46.7 W 26.7 W to 33.7 W 23.2 W to 29.2 W 18.5 W to 23.3 W 18.5 W to 23.3 W 18.5 W to 23.3 W 13.4 W to 16.8 W 13.9 W to 17.5 W 13.9 W to 17.5 W 13.9 W to 17.5 W 13.9 W to 17.5 W 4.5 W to 5.8 W 9.3 W to 11.7 W 9.3 W to 11.7 W 9.3 W to 11.7 W 9.3 W to 11.7 W 1.8 W to 2.2 W
>25W	Current at high power (>25 W radios): • B1-band radios • G2-band radios • H5-band radios • H7-band radios • K5-band radios	 < 10.5 A < 8.5 A < 8.5 A < 8.5 A < 10 A
	Peak deviation (sweep tone of 300 Hz to 3 kHz): • Narrow-band • Medium-band • Wide-band	 ≤ 2.5 kHz ≤ 4.0 kHz ≤ 5.0 kHz
	Distortion: • 1 kHz at 1.5 kHz deviation (narrow-band) • 1 kHz at 3.0 kHz deviation (wide-band)	 < 3% < 3%
	CTCSS deviation: • Narrow-band • Medium-band • Wide-band	 250 to 350 Hz 500 to 560 Hz 580 to 680 Hz

© Tait Electronics Limited November 2007

Table 6.3 Final tests of receiver functions

Test	Limits
Receive sensitivity	≤118dBm for 12dB SINAD
Mute opening: • Country • City • Hard	 >6dB and <10dB SINAD >8dB and <14dB SINAD >18dB and <22dB SINAD
Audio power (maximum volume at –47dBm): • At "Rx AUDIO/SINAD" connector on test unit • At pins 3 (SPK–) and 4 (SPK+) of power connector on radio	 >500mV$_{rms}$[a] >5.00V$_{rms}$
Distortion (at –47dBm, 60% rated system deviation at 1 kHz, with volume set to give 3W into 16Ω load)	<3.00%

a. The RX AUDIO/SINAD output on the test unit has 10dB of attenuation switched in when the test unit PORTABLE/MOBILE switch is set to MOBILE. Refer to "TOPA-SV-024 Test Unit" on page 613 for details.

Table 6.4 Final tests of general radio functions

Test	Description
PTT switch	Check that PTT switch functions.
Microphone	Check operation of microphone. Check operation of hookswitch.
Data communications	Test 1200 baud data transmission (standard). Test Tait high-speed data transmission (if feature is enabled).
Direct-connect GPS (global positioning system)	Check that GPS poll returns correct position (if feature is enabled).
Selcall	Check that radio encodes Selcall. Check that radio decodes Selcall.
Audio tap points and digital I/O	Check configuration of programmed options and test operation of these lines to confirm that Customer requirements are satisfied.

© Tait Electronics Limited November 2007

© Tait Electronics Limited November 2007

7 Power Supply Fault Finding

Fault-Diagnosis Tasks

Fault diagnosis of the power-supply circuitry is divided into the following tasks:

- Task 1: check inputs to SMPS
- Task 2: check 3.3V supply
- Task 3: check linear regulators (for 2.5V, 3V, 6V and 9V supplies)
- Task 4: check power-up configuration
- Task 5: check power-up options
- Task 6: check provision of external power.

Types of Fault

Which of the above tasks are applicable depends on the nature of the fault:

- Radio fails to power up: The radio fails to power up immediately when power is applied, or it fails to power up when power is applied and the ON/OFF key is pressed. Carry out Task 1 to Task 3
- Power-up option has failed: The radio powers up when the ON/OFF key is pressed, but not for a power-up option for which it is configured. Carry out Task 4 and Task 5.
- External power at connector has failed: The external power required at a particular connector is no longer present. Carry out Task 6.

© Tait Electronics Limited November 2007

Task 1 — Check Inputs to SMPS

The test equipment and radio should be set up as described in "Setting up the Test Equipment" on page 115. If not already done, remove the board. Connect the control head to the assembly. Then check the SMPS as follows:

1. Use a multimeter to check the supply voltage at pin 7 of **IC602** (see **Figure 7.1**) in the SMPS circuitry; the voltage should be:

pin 7 of IC602: 13.8 V DC

   If it is, go to Step 5. If it is not, go to Step 2.

2. Disconnect the 13.8 V supply at the power connector PL100. Check for continuity and shorts to ground in the path between the power connector **PL100** and pin 7 of **IC602** (see **Figure 7.1**). Locate and repair the fault.

3. Reconnect the 13.8 V supply. Confirm the removal of the fault by measuring the voltage at pin 7 of **IC602**. If the voltage is correct, continue with Step 4. If it is not, the repair failed; replace the board and go to "Final Tasks" on page 163.

4. Press the ON/OFF key. If the radio powers up, return to "Initial Tasks" on page 155. If it does not, go to Step 5.

5. Check the digital power-up signal at pin 5 of **IC602** (see **Figure 7.1**); the signal is active high, namely, when the voltage exceeds 2.0 V DC. Measure the voltage at pin 5.

pin 5 of IC602: more than 2.0 V DC

   If it exceeds 2.0 V, go to Task 2. If it does not, go to Step 6.

6. Keep the probe of the multimeter on pin 5 of **IC602** and press the ON/OFF key. The voltage should exceed 2.0 V DC while the key is depressed. If it does, go to Task 2. If it does not, go to Step 7.

7. Disconnect the 13.8 V supply at the power connector PL100. Check for continuity and shorts to ground in the path from pin 5 of **IC602**, via **R600** and via **Q709** in the interface circuitry (see Figure 8.4), to pin 9 of the control-head connector **SK100** (ITF PSU ON OFF line). Locate and repair the fault. Go to Step 8.

8. Reconnect the 13.8 V supply. Press the ON/OFF key. If the radio powers up, return to "Initial Tasks" on page 155. If it does not, go to Step 9.

9. With the probe of the multimeter on pin 5 of **IC602** (see Figure 7.1), press the ON/OFF key again. The voltage should exceed 2.0 V DC while the key is depressed. If it does, go to Task 2. If it does not, the repair failed; replace the board and go to "Final Tasks" on page 163.

© Tait Electronics Limited November 2007

Figure 7.1 Important components of the power-supply circuitry (bottom side), including 3.3 V regulator IC602

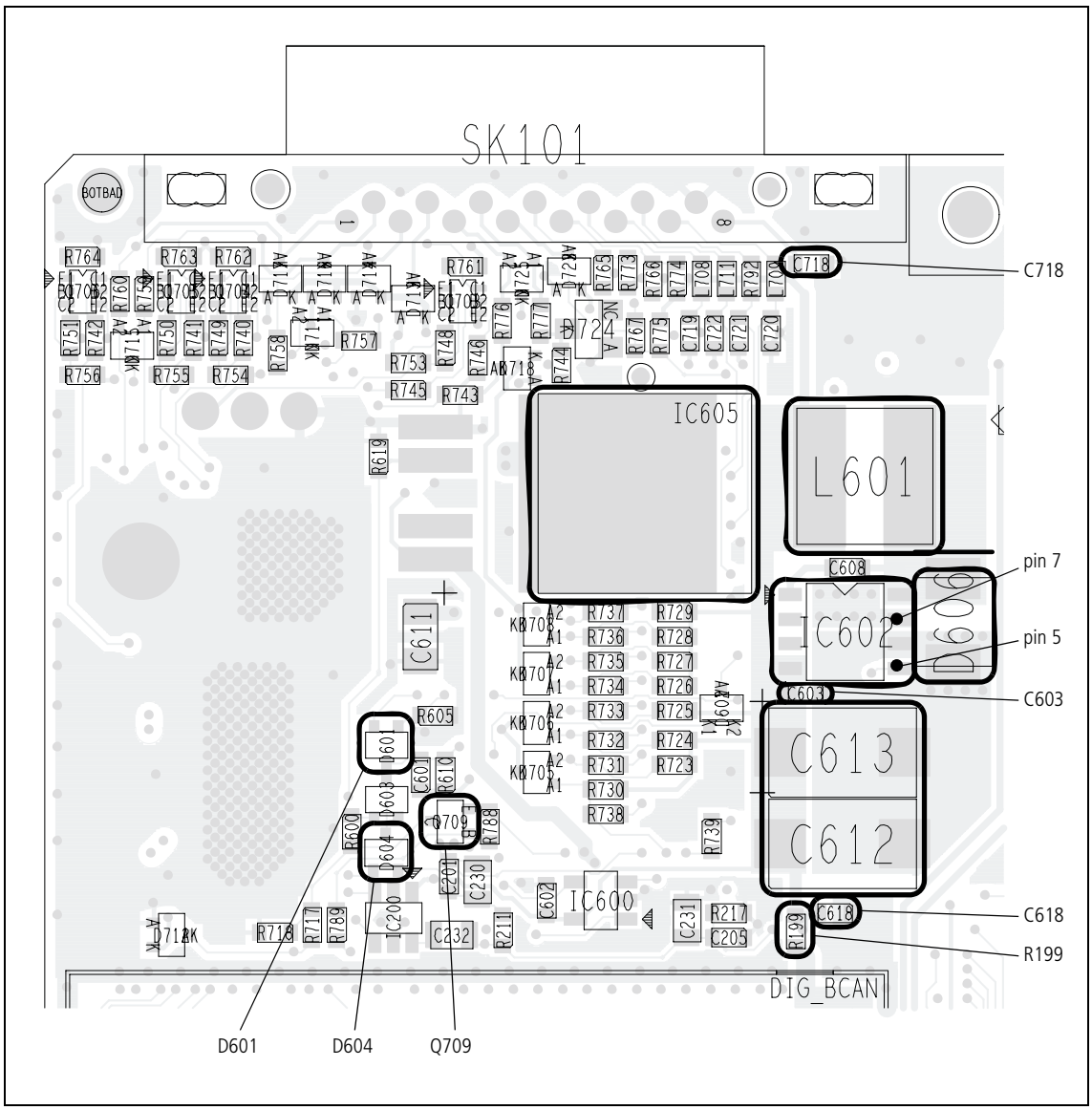

Figure 7.2 Important components of the power-supply circuitry (top side), including 9V regulator IC601

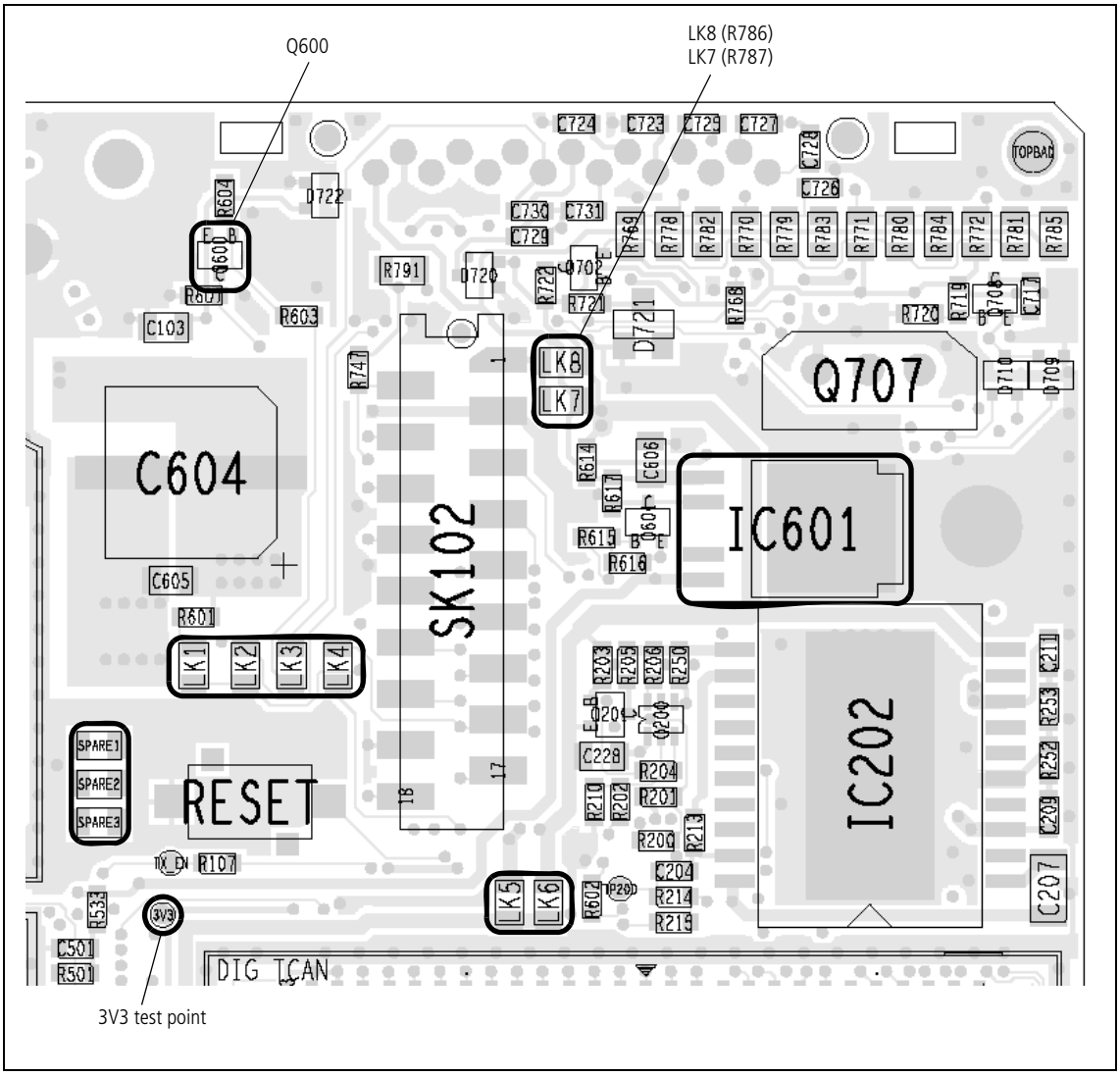

Task 2 — Check 3.3V Supply

If the inputs at pin 5 and pin 7 of IC602 in the SMPS circuitry are correct, but the radio fails to power up, then the 3.3V DC supply needs to be investigated.

1. First determine as follows if a fault on the digital board is affecting the supply or preventing the radio from powering up: While keeping the ON/OFF key depressed, measure the supply at the **3V3 test point** near the corner of the digital board (see **Figure 7.2**). The voltage is 3.3V when there is no fault.

3V3 test point: 3.3 ± 0.1 V DC

If the voltage is correct, the digital board is faulty; replace the board and go to "Final Tasks" on page 163. If the voltage is not correct, go to Step 2.

© Tait Electronics Limited November 2007

2. Disconnect the 13.8V supply at the power connector. Remove **R199** (see **Figure 7.1**). Reconnect the 13.8V supply.

3. With the probe of the multimeter on the **3V3 test point**, press the ON/OFF key. If the voltage is now 3.3 ± 0.1V, the digital board is faulty; replace the board and go to "Final Tasks" on page 163. If the voltage is still not correct, go to Step 4.

4. If the digital board is functional, the fault is on the main board. Replace **R199**. Disconnect the 13.8V supply. Use the multimeter to measure the resistance between the **3V3 test point** and ground. If there is a short circuit, continue with Step 5. If there is no short circuit (but the voltage is wrong), go to Step 7.

5. Search for shorts to ground in the components **C603**, **C612**, **C613**, **C618**, **D606** of the SMPS circuitry (see **Figure 7.1**) as well as in the CODEC and interface circuitry. Repair any fault and repeat the resistance measurement of Step 4 to confirm the removal of the fault. If there is no fault, go to Step 6. If the fault remains, the repair failed; replace the board and go to "Final Tasks" on page 163.

6. Reconnect the 13.8V supply. Press the ON/OFF key. If the radio powers up, return to "Initial Tasks" on page 155. If the radio fails to power up, disconnect the 13.8V supply and go to Step 7.

7. Measure the resistance of **L601** (see **Figure 7.1**). The resistance should be virtually zero. If it is, go to Step 8. If it is not, replace L601. Reconnect the 13.8V supply and press the ON/OFF key. If the radio powers up, return to "Initial Tasks" on page 155. If the radio fails to power up, disconnect the 13.8V supply and go to Step 8.

8. Remove the CDC BOT can. Remove **IC603** (3.0V regulator) and **IC604** (2.5V regulator) (see **Figure 7.3**). Reconnect the 13.8V supply and press the ON/OFF key. If the 3.3V supply is restored, go to Task 3 to check each regulator (3.0V and 2.5V) in turn. If the 3.3V supply is not restored, continue with Step 9.

9. Suspect **IC602**. Disconnect the 13.8V supply. Replace IC602 with a spare (see **Figure 7.1**). Resolder **IC603** and **IC604** in position (see **Figure 7.3**). Reconnect the 13.8V supply and press the ON/OFF key. If the radio powers up, return to "Initial Tasks" on page 155. If the radio fails to power up, the repair failed; replace the board and go to "Final Tasks" on page 163.

© Tait Electronics Limited November 2007

Figure 7.3 Power-supply circuitry under the CDC BOT can, including 3V regulator IC603 and 2.5V regulator IC604

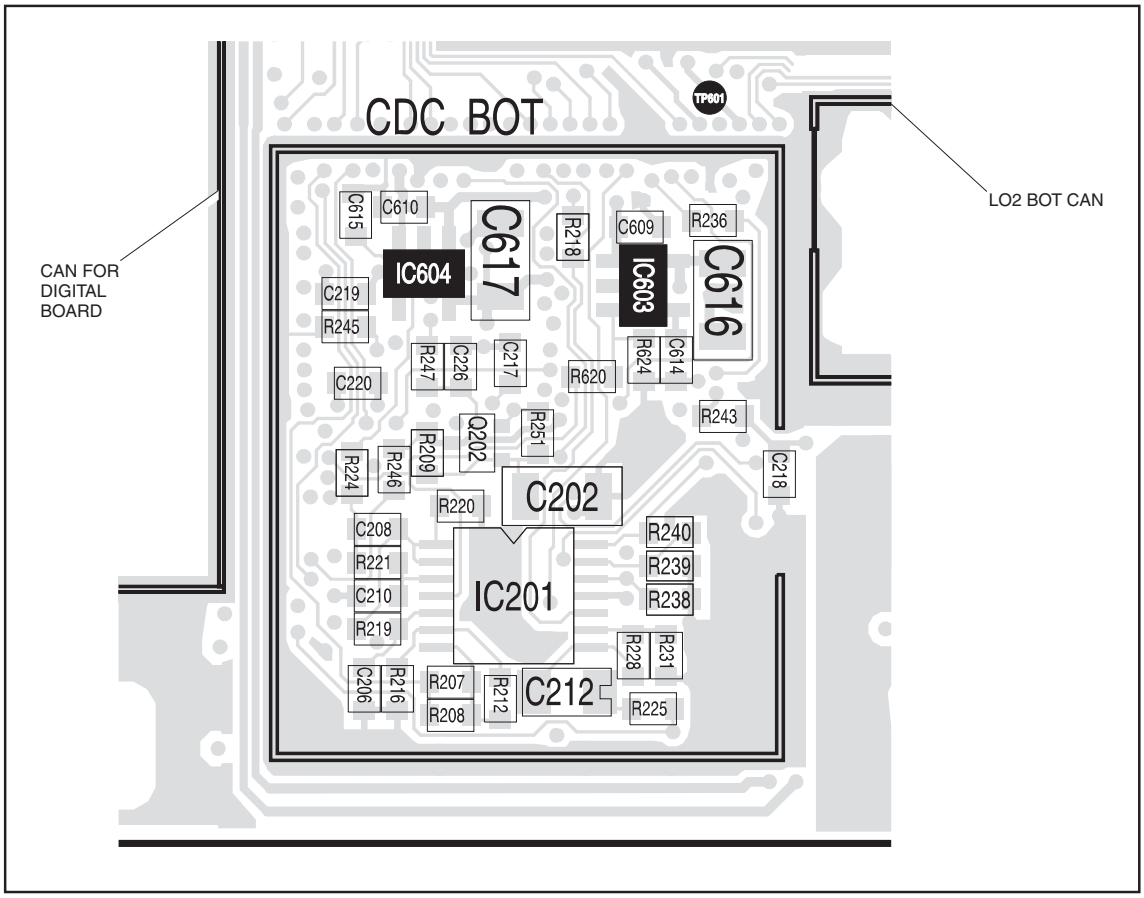

Task 3 — Check Linear Regulators

This task describes the general procedure for checking any linear regulator. There are two possible faults: either the regulator has failed and prevents the radio from powering up, or the regulator voltage is incorrect. (The regulator IC might or might not have been removed during earlier checks.)

1. Disconnect the 13.8 V supply. Check for continuity and shorts to ground (if not already done) on the input, output and control line of the relevant regulator IC. Repair any fault.

2. If the regulator IC has been removed, resolder it in position.

3. Reconnect the 13.8 V supply and press the ON/OFF key. If the radio powers up or the correct regulator voltage is restored, return to "Initial Tasks" on page 155. If the repair failed, go to Step 4.

4. Disconnect the 13.8 V supply. Replace the regulator IC with a spare. Reconnect the 13.8 V supply and press the ON/OFF key. If the radio powers up or the correct regulator voltage is restored, go to "Final Tasks" on page 163. If the repair failed, replace the board and go to "Final Tasks" on page 163.

© Tait Electronics Limited November 2007

Task 4 — Check Power-up Configuration

The radio may be configured for one or more of the following power-up options:

- battery power sense
- auxiliary power sense
- emergency power sense
- internal-options power sense

A particular option is implemented by inserting the link mentioned in Table 7.1. If there is a fault with a power-up option for which the radio is configured, first confirm that the configuration is correct:

1. Confirm that the correct link or links have been inserted for the required power-up options (see **Figure 7.2** and **Table 7.1**). For all except the battery-power-sense option, also check the radio's programming as follows:

2. Open the *"Programmable I/O"* form.

3. Under the *"Digital"* tab, scroll to the relevant digital line listed in the *"Pin"* field:
   - internal-options power sense: IOP GPIO7
   - auxiliary power sense: AUX GPI3
   - emergency power sense: AUX GPI2

4. For the first two lines, confirm that the *"Power Sense (Ignition)"* option has been selected in the *"Action"* field, and *"High"* or *"Low"* in the *"Active"* field. For the third line, confirm that *"Enter Emergency Mode"* has been selected.

5. If the link and programming settings are correct, go to Task 5. If they are not, rectify the settings and check if the fault has been removed. If it has, return to "Initial Tasks" on page 155. If it has not, go to Task 5.

Table 7.1 Implementation of the power-up options

Power-up option	Link to insert	Factory default	Activation mechanism	Connector
Battery power sense	LK1	Link in	Connection of 13.8V supply	Power connector
Auxiliary power sense	LK2	Link in	AUX GPI3 line goes high (If LK1 is in, line floats high; if LK1 is out, line floats low)	Pin 4 of auxiliary connector
Emergency power sense	LK3	Link in	AUX GPI2 line goes low	Pin 5 of auxiliary connector
Internal-options power sense	LK4	Link out	IOP GPIO7 line goes high	Pin 15 of internal-options connector

© Tait Electronics Limited November 2007

Task 5 — Check Power-up Options

The functioning of the power-up options may be checked as described in Step 1 to Step 4 below. Carry out the procedure in the appropriate step or steps. In all four cases the procedure involves checking the digital power-up signal at pin 5 of IC602. For a particular option, the activation mechanism is the condition that results in the power-up signal becoming active (the signal is active high).

1. For the battery power-sense option the link **LK1** should be inserted (see **Figure 7.2**). Check the power-up signal at pin 5 of **IC602** (see **Figure 7.1**) while first disconnecting and then reconnecting the 13.8V DC supply at the power connector.

   The power-up signal should go high when the power is reconnected. If it does, conclude with Step 5. If it does not, check for continuity and shorts to ground between the link **LK1** and the +13V8 BATT input at the power connector **PL100**. Repair any fault and go to Step 5.

2. For the auxiliary power-sense option the link **LK2** should be inserted (see **Figure 7.2**). Connect +3.3V DC (more than 2.6V to be precise) from the power supply to the AUX GPI3 line (pin 4 of the auxiliary connector **SK101**). Check that the power-up signal at pin 5 of **IC602** (see **Figure 7.1**) is high.

   Remove the +3.3V supply and ground the AUX GPI3 line (to be precise the voltage on the line should be less than 0.6V). If the power-up signal is now low, conclude with Step 5. If it is not, check for continuity and shorts to ground between **D601** (see **Figure 7.1**) and pin 4 of the auxiliary connector **SK101**. Repair any fault and go to Step 5.

3. For the emergency power-sense option the link **LK3** should be inserted (see **Figure 7.2**). Connect the AUX GPI2 line (pin 5 of the auxiliary connector **SK101**) to ground. Check that the power-up signal at pin 5 of **IC602** (see **Figure 7.1**) is high.

   Remove the connection to ground. If the power-up signal is now low, conclude with Step 5. If it is not, check for continuity and shorts to ground in the path from **D601** (see **Figure 7.1**), via **Q600** (see **Figure 7.2**), to pin 5 of the auxiliary connector **SK101**. Repair any fault and go to Step 5.

© Tait Electronics Limited November 2007

4. For the internal-options power-sense option the link **LK4** should be inserted (see **Figure 7.2**). Connect +3.3V DC (more than 2.6V to be precise) from the power supply to the IOP GPIO7 line (pin 15 of the internal-options connector **SK102**). Check that the power-up signal at pin 5 of **IC602** (see **Figure 7.1**) is high.

   Remove the +3.3V supply and ground the IOP GPIO7 line (to be precise the voltage on the line should be less than 0.6V). If the power-up signal is now low, conclude with Step 5. If it is not, check for continuity and shorts to ground between **D604** (see **Figure 7.1**) and pin 15 of the internal-options connector **SK102**. Repair any fault and go to Step 5.

5. After checking all the relevant power-up options, and if necessary repairing any faults, go to "Final Tasks" on page 163. If the fault could not be found or repairs failed, replace the board and go to "Final Tasks" on page 163.

© Tait Electronics Limited November 2007

Task 6 — Check Provision of External Power

External power is supplied to pin 8 of the auxiliary connector SK101. The power is normally switched, but will be unswitched if all the links LK5 to LK8 are inserted. (With all the links inserted, the power at the other connectors is also unswitched.)

External power, either switched or unswitched, is supplied to pin 2 of the control-head connector SK100. The power is switched or not depending on the links LK5 and LK6:

- switched power: LK5 in, LK6 out
- unswitched power: LK5 out, LK6 in

External power is also supplied to pin 1 of the internal-options connector SK102. The power is switched or not depending on the links LK7 and LK8:

- switched power: LK7 in, LK8 out
- unswitched power: LK7 out, LK8 in

Note In some boards, LK7 is R786 and LK8 is R787.

If there is a fault with the supply of external power to any of these connectors, first confirm the link settings required and then carry out the following procedure:

1. With the radio powered up, confirm that 13.8V DC is present at pin 3 of **IC605** (see **Figure 7.1**) and more than 3V DC at pin 2.

2. Check that 13.8 V is present at pin 5 of **IC605**. If there is, go to Step 3. If there is not, go to Step 4.

3. Check for an open circuit between pin 5 of **IC605** and the relevant pin of the connector in question. Repair any fault, confirm the removal of the fault, and go to "Final Tasks" on page 163. If the repair failed or the fault could not be found, replace the board and go to "Final Tasks" on page 163.

4. Check for continuity between pin 5 of **IC605** and the relevant pin of the connector in question. Check for shorts to ground, check **C718** at the auxiliary connector (see **Figure 7.1**), and check **C715** at the internal-options connector (see **Figure 8.2**).

5. Repair any fault found in the above checks. If no fault could be found, replace **IC605**.

6. Confirm the removal of the fault and go to "Final Tasks" on page 163. If the repair failed, replace the board and go to "Final Tasks" on page 163.

© Tait Electronics Limited November 2007

8 Interface Fault Finding

Introduction

This section covers the diagnosis of faults involving signals output from or input to the radio's internal circuitry via the control-head, internal options, power, or auxiliary connectors. For most inputs and outputs, filtering or basic processing is applied between the internal circuitry and the connectors.

Internal and Connector Signals

The signals at the internal circuitry and those at the connectors are distinguished as internal signals and connector signals respectively. On the circuit diagram for the internal circuitry, dashed lines enclose connector signals. Internal signals are all named signals outside these enclosures. In Figure 8.1, which shows part of the internal options connector as an example, IOP GPIO7 is a connector signal and ITF IOP GPIO7 is an internal signal.

Figure 8.1 Example illustrating the convention for internal and connector signals

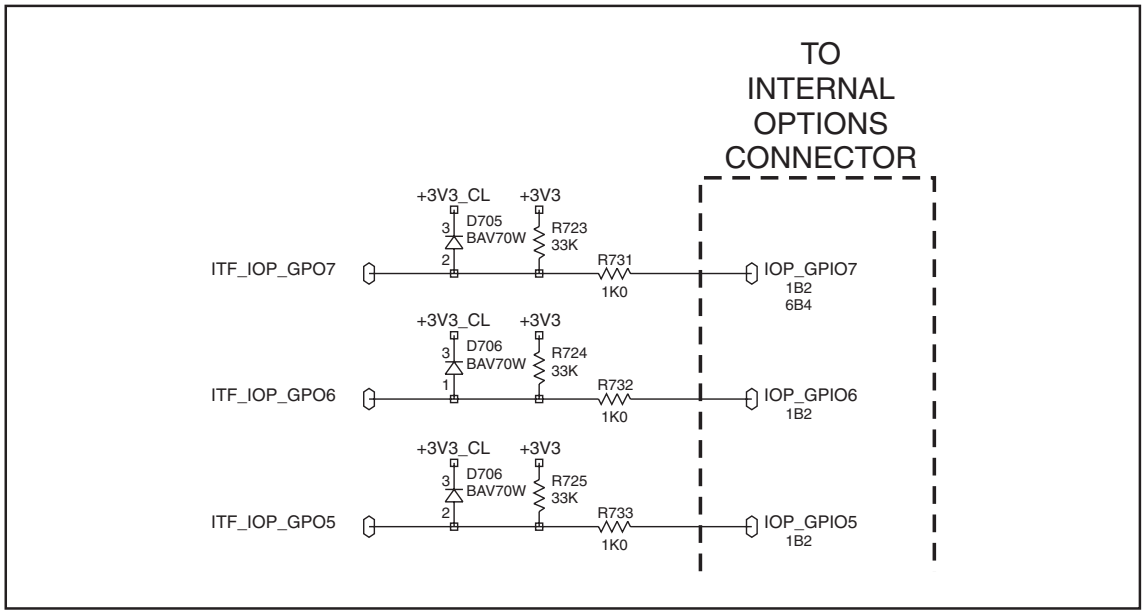

Types of Signals

The connector and internal signals can be of three types:

- output lines
- input lines
- bi-directional lines.

For diagnosing faults in these three cases, carry out Task 1, Task 2 or Task 3 respectively. Where components need to be replaced to rectify faults, refer to Figure 8.2 to Figure 8.4 for the locations of the components. These figures show the three areas of the main board where the components of the interface circuitry are situated.

© Tait Electronics Limited November 2007

Figure 8.2 Components of the interface circuitry (top side near the CDC TOP and IF TOP cans)

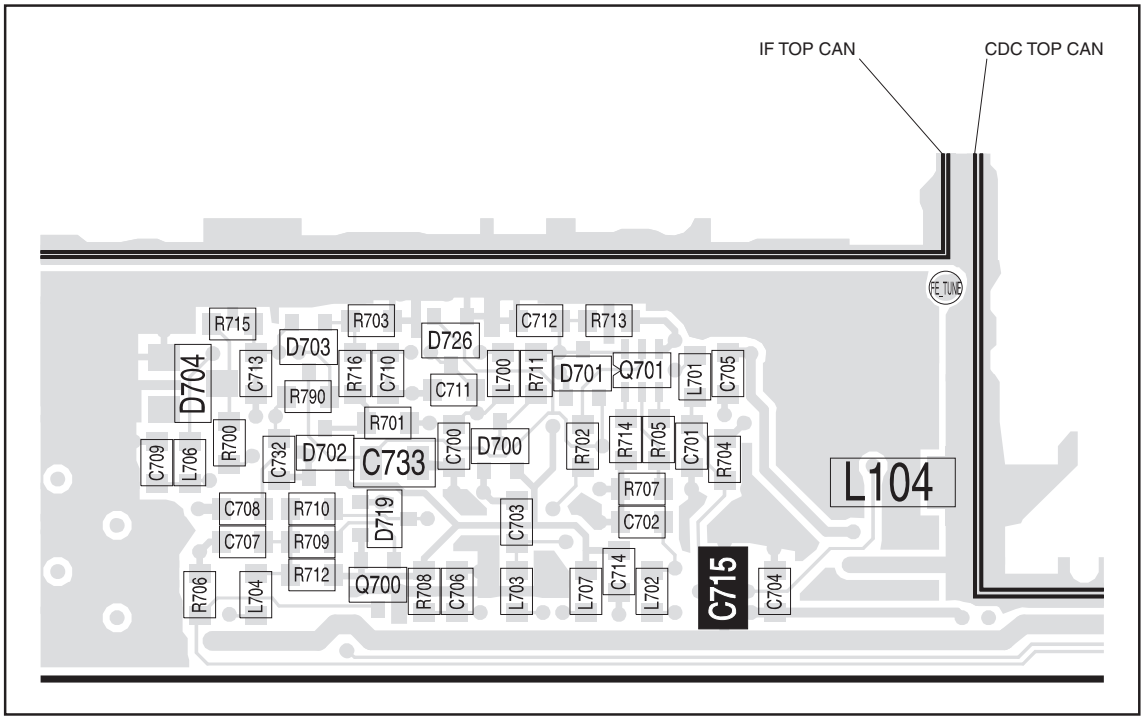

Figure 8.3 Components of the interface circuitry (top side at the corner)

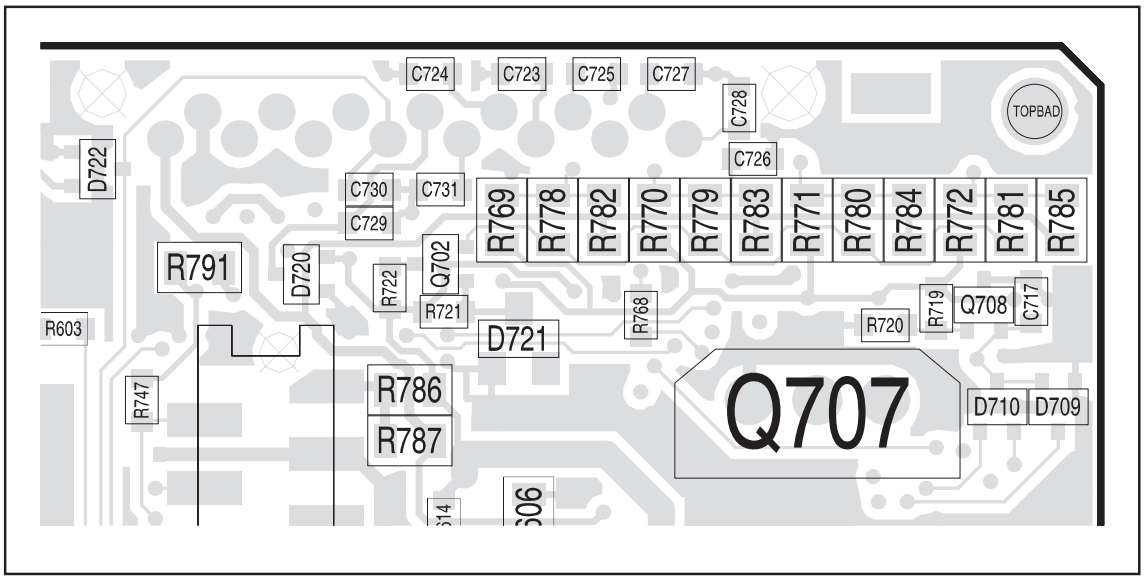

© Tait Electronics Limited November 2007

Task 1 — Check Output Lines

For an output line suspected or reported to be faulty, compare actual and expected signals as described below. If necessary, determine what an expected signal should be by copying the faulty radio's programming file into a serviceable radio and measuring the relevant points on the latter.

1. Check the electrical signal at the appropriate pin of a connector mated to the radio connector in question. If the expected connector signal is not present, go to Step 3. If it is, go to Step 2.

2. If the expected signal is present, there might be no fault on that line or there could be an intermittent fault. Subject the radio to mild mechanical shock or vibration, or to a temperature change. This might expose any intermittent contact, in which case go to Step 3.

3. If the expected signal is not present, check whether the expected internal signal is present. If it is, go to Step 5. If it is not, go to Step 4.

4. The fault lies with the radio's internal circuitry. If the power-supply circuitry or the CODEC and audio circuitry is suspect, continue with the fault diagnosis as in "Power Supply Fault Finding" on page 169 and "CODEC and Audio Fault Finding" on page 399 respectively. If the digital board is suspect, replace the board and go to "Final Tasks" on page 163.

5. The fault lies in the filtering, basic processing, or connector for the line under test. Re-solder components or replace damaged or faulty components as necessary. Confirm the removal of the fault and go to "Final Tasks" on page 163. If the fault could not be found, replace the board and go to "Final Tasks" on page 163.

© Tait Electronics Limited November 2007

Figure 8.4 Components of the interface circuitry (bottom side)

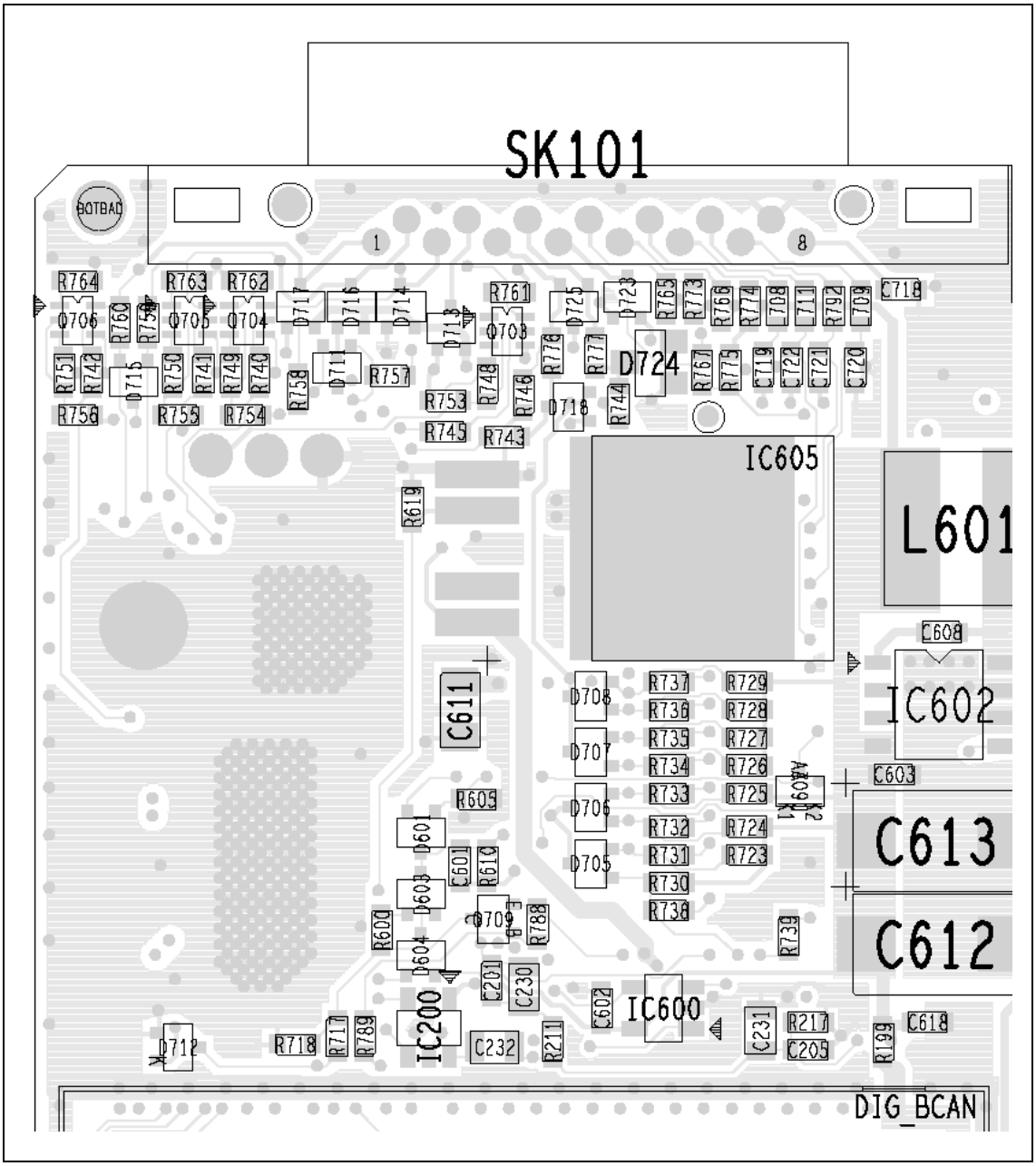

© Tait Electronics Limited November 2007

Task 2 — Check Input Lines

For an input line suspected or reported to be faulty, proceed as follows:

1. For a suspect CH ON OFF line, go to Step 4. For all other input lines go to Step 2.

2. For the suspect line, apply a 3.3V DC test signal to a connector mated to the radio connector in question.

3. Check the internal signal for the line under test. If 3.3V DC is present, go to Step 7. If it is not, go to Step 8.

4. For the CH ON OFF line, apply a short to ground on pin 5 of a connector mated to the control-head connector. Check that there is 3.9V DC present on the ITF ON OFF line, and that PSU ON OFF is approximately equal to the radio's primary supply voltage, nominally 13.8V DC.

5. Remove the short on the connector. Check that, with CH ON OFF open-circuit, both ITF ON OFF and ITF PSU ON OFF are close to 0.0V.

6. If the voltages given in Step 4 and Step 5 are observed, go to Step 7. If they are not, go to Step 8.

7. The fault lies with the radio's internal circuitry. If the power-supply circuitry or the CODEC and audio circuitry is suspect, continue with the fault diagnosis as in "Power Supply Fault Finding" on page 169 and "CODEC and Audio Fault Finding" on page 399, respectively. If the digital board is suspect, replace the board and go to "Final Tasks" on page 163.

8. The fault lies in the filtering, basic processing, or connector for the line under test. Re-solder components or replace faulty components as necessary. Confirm the removal of the fault and go to "Final Tasks" on page 163. If the fault could not be found, replace the board and go to "Final Tasks" on page 163.

Task 3 — Bi-directional Lines

For a bi-directional line suspected or reported to be faulty, proceed as described below. In the procedure the direction of the line will need to be configured. For information on this topic consult the on-line help facility on the programming application's *"Programmable I/O"* page.

1. Configure the suspect line as an output, and then carry out the procedure given in Task 1.

2. Configure the suspect line as an input, and then carry out the procedure given in Task 2.

© Tait Electronics Limited November 2007

© Tait Electronics Limited November 2007

9 Frequency Synthesizer Fault Finding

Introduction

This section covers the diagnosis of faults in the frequency synthesizer. The sections are divided into the following:

- Initial checks
- Fault diagnosis of RF PLL circuitry
- Fault diagnosis of FCL circuitry.

The initial checks will indicate whether it is the RF PLL or the FCL that is suspect. Note that the synthesizer is a closed-loop control system. A fault in one area can cause symptoms to appear elsewhere. Locating the fault can therefore be difficult.

Measurement Techniques

The radio must be in CCTM for all the fault-diagnosis procedures of this section. The CCTM commands required are listed in Table 9.1. Full details of the commands are given in "Computer-Controlled Test Mode (CCTM)" on page 123. Use an oscilloscope with a x10 probe for all voltage measurements required. The signals should appear stable and clean. Consider any noise or unidentified oscillations as evidence of a fault requiring investigation. Use a frequency counter for all measurements of high frequencies. The RF power output from the frequency synthesizer will not exceed 10 mW. If a probe is used for frequency measurements, use the x1 setting.

Table 9.1 CCTM commands required for the diagnosis of faults in the frequency synthesizer

Command	Description
72	Read lock status of RF PLL, FCL and LO2 — displays **xyz** (0=not in lock, 1=in lock)
101 **x** **y** 0	Set transmit frequency (**x** in hertz) and receive frequency (**y** in hertz) to specified values
205	Reset calibration parameters to their default values
301 0 10	Calibrate VCXO of FCL
302 0 10	Calibrate VCO(s) of RF PLL
334 **x**	Set synthesizer on (**x**=1) or off (**x**=0) via DIG SYN EN line
335 **x**	Set transmit-receive switch on (**x**=1) or off (**x**=0) via DIG SYN TR SW line
389 **x**	Set synthesizer mode to slow (**x**=0) or fast (**x**=1)
393 1 **x**	Write data **x** to FPGA

© Tait Electronics Limited November 2007

9.1 Initial Checks

Types of checks

There are two different types of initial checks, which are covered in the following tasks:

- Task 1: calibration checks
- Task 2: lock status.

Which, if any, of these tasks needs to be carried out depends on the symptoms of the fault.

Symptoms of Fault

The symptoms of the fault may be divided into three categories:

- radio fails to power up and system error is displayed
- lock error is displayed
- radio is in lock but exhibits transmit or receive fault.

The nature of the display depends on the type of control head as shown in Table 9.2.

Table 9.2 Format of error displays by different control heads

Control head	Type of error	
	Lock error	System error
1-digit-display control head	*L*	*E*
2-digit-display control head	*OL*	*E2*
3-digit-display control head	*OL*	*E2*
Graphical-display control head	*Out of lock*	*System error*

In the first two cases the checks of Task 1 and Task 2 respectively are required. In the last case there are several symptoms; these are listed below.

Frequency Bands

Where test procedures or figures differ according to the frequency band of the radio, the frequency band is given in brackets. The frequency band may be referred to as either 'VHF' (very high frequency) or 'UHF' (ultra high frequency) or identified by the frequency sub-band, such as 'B1' or 'H7'.

The product-code label on the radio body will identify the frequency band as described in "Product Codes" on page 17. A definition of frequency bands is given in "Defining Frequency Bands" on page 131.

© Tait Electronics Limited November 2007

Transmit and Receive Faults

A transmit or receive fault will be implied by one of the following consequences:

- radio fails to receive or receive performance is degraded
- radio fails to enter transmit mode
- radio exits transmit mode unexpectedly
- radio enters transmit mode but fails to transmit
- radio enters transmit mode but transmit performance is degraded.

With a fault of this kind, neither of the initial tasks is required.
Fault diagnosis should begin with "Power Supplies" on page 189.

Summary

To summarize, given the nature of the fault, proceed to the task or section indicated below:

- Task 1: system error
- Task 2: lock error
- "Power Supplies": transmit or receive fault.

The checks of Task 1 and Task 2 will indicate the section with which the fault diagnosis should continue.

Task 1 — System Error

A system error indicates a fault in the calibration of either the FCL or the frequency synthesizer. To determine which is faulty, calibrate the VCXO and the transmit VCO as described below. (Always calibrate the former first, because the latter depends on the former.)

1. Place the radio in CCTM.

2. Enter the CCTM command *301 0 10* to calibrate the VCXO.
   The response will be one of the following three messages:
   - *"passed sanity check. Cal'd values put into effect"*
   - *"failed sanity check. Cal'd values not in effect"*
   - *"Cal failed: lock error".*

   The first two messages will be preceded by <u>four</u> calibration values.

3. In the case of the first message (passed), go to Step 4. In the case of the second and third messages (failed), the FCL is suspect; go to "Power Supply for FCL" on page 234.

4. Enter the CCTM command *302 0 10* to calibrate the transmit VCO.
   The response will be one of the three messages listed in Step 2.
   The first two messages will be preceded by <u>eight</u> calibration values.
   Reset the radio and re-enter CCTM.

5. If the calibration succeeded but the system error persists, replace the board and go to "Final Tasks" on page 163. In the case of the second message (failed sanity check), go to Step 6. In the case of the third message (calibration failed), go to Step 8 (UHF radios) or "Power Supplies" on page 189 (VHF radios).

© Tait Electronics Limited November 2007

6. Enter the CCTM command *205* to reset the calibration values to the default values. Then enter the CCTM command *302 0 10* again to calibrate the transmit VCO.

7. If the calibration succeeded, confirm the removal of the fault, and go to "Final Tasks" on page 163. If the calibration failed, go to Step 8 (UHF radios) or "Power Supplies" on page 189 (VHF radios).

8. Program the radio with the maximum frequency in the radio's frequency band: Enter the CCTM command *101 **x** **x** 0*, where ***x*** is the frequency in hertz.

9. Enter the CCTM command *72* to determine the lock status in receive mode. Note the response.

lock status=**xyz** (**x**=RF PLL; **y**=FCL; **z**=LO2) (0=not in lock; 1=in lock)

10. If the lock status is *111* or *110*, the synthesizer is functioning in the receive mode, and the power supplies and PLL are functioning correctly. Go to "Loop Filter" on page 204 to check the loop filter, VCOs, and buffer amplifiers. If the lock status is *011* or *010*, the synthesizer is faulty in the receive mode. Go to "Power Supplies" on page 189.

Task 2 — Lock Status

A lock error indicates that the frequency synthesizer, FCL or second LO is out of lock. To determine which is faulty, check the lock status as described below.

1. If not already done, place the radio in CCTM.

2. Program the radio with the receive frequency of a channel that is known to be out of lock: Enter the CCTM command *101 **x** **x** 0*, where ***x*** is the frequency in hertz.

3. Enter the CCTM command *72* to determine the lock status in receive mode. Note the response. The action required depends on the lock status as described in the following steps.

lock status=**xyz** (**x**=RF PLL; **y**=FCL; **z**=LO2) (0=not in lock; 1=in lock)

4. If the lock status is ***x0x***, where ***x*** is *0* or *1*, the FCL is suspect; go to "Power Supply for FCL" on page 234.

5. If the lock status is *011*, the synthesizer is suspect, although the power supplies are functioning correctly; go to "Loop Filter" on page 204.

6. If the lock status is *010*, the synthesizer and second LO are both out of lock. First investigate the synthesizer, excluding the power supplies; go to "Loop Filter" on page 204. If necessary, investigate the receiver later.

© Tait Electronics Limited November 2007

7. If the lock status is *110*, the second LO is out of lock. Go to "Receiver Fault Finding" on page 247.

8. If the lock status is *111*, this implies normal operation. But if the lock error persists, replace the board and go to "Final Tasks" on page 163.

9.2 Power Supplies

Introduction

First check that a power supply is not the cause of the fault. There are four power supplies for the frequency synthesizer — two are supplied from the PSU (power supply unit) module and two are produced in the synthesizer circuitry itself:

- Task 3: 14VDC (K5 band: 15.5V) supply from SMPS (VCL SUPPLY)
- Task 4: 6V DC supply from 6V regulator in PSU module (+6V0)
- Task 5: 5V DC supply following filtering of 6V supply (+5V DEC)
- Task 6: 3V DC supply from 3V regulator in PSU module (+3V0 AN).

The measurement points for diagnosing faults in the power supplies are summarized in Figure 9.1.

Figure 9.1 Measurement points for the frequency synthesizer power supply circuitry

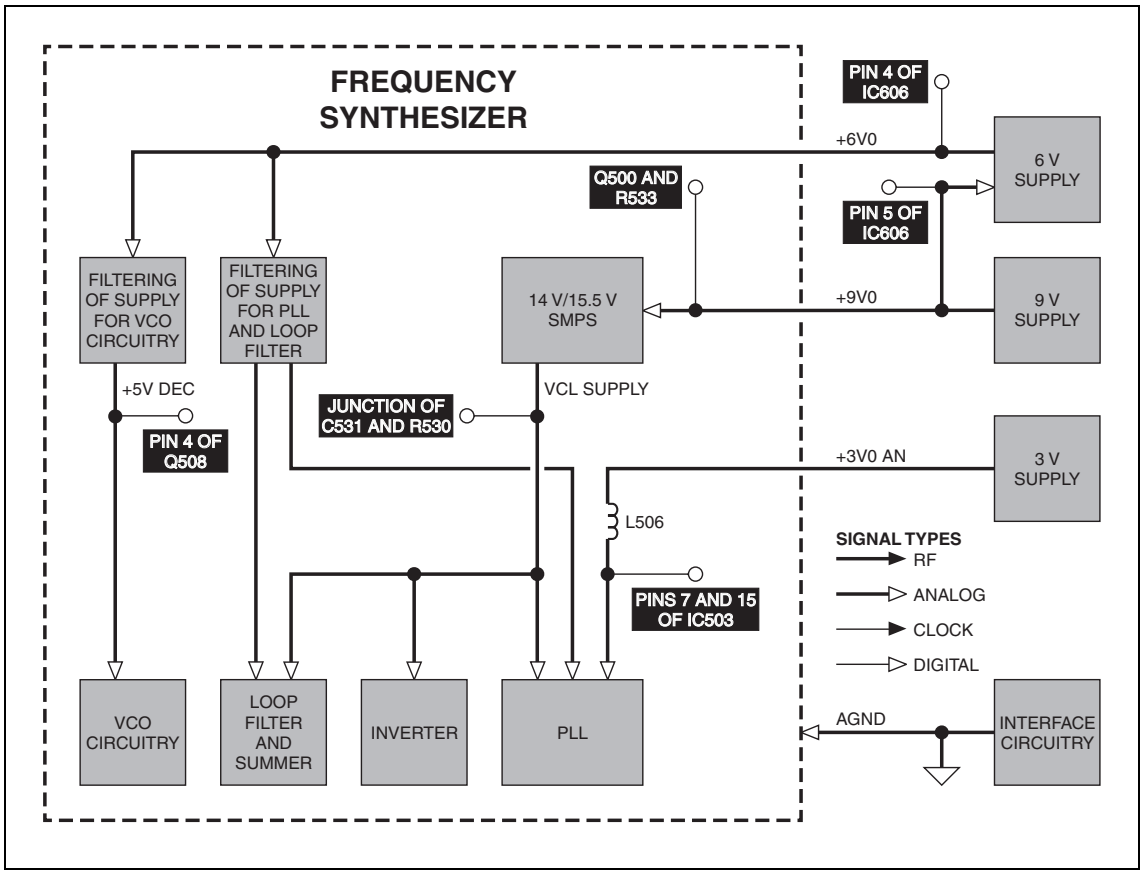

© Tait Electronics Limited November 2007

Figure 9.2 Synthesizer circuitry under the SYN TOP can and the 6V regulator IC606 (top side)

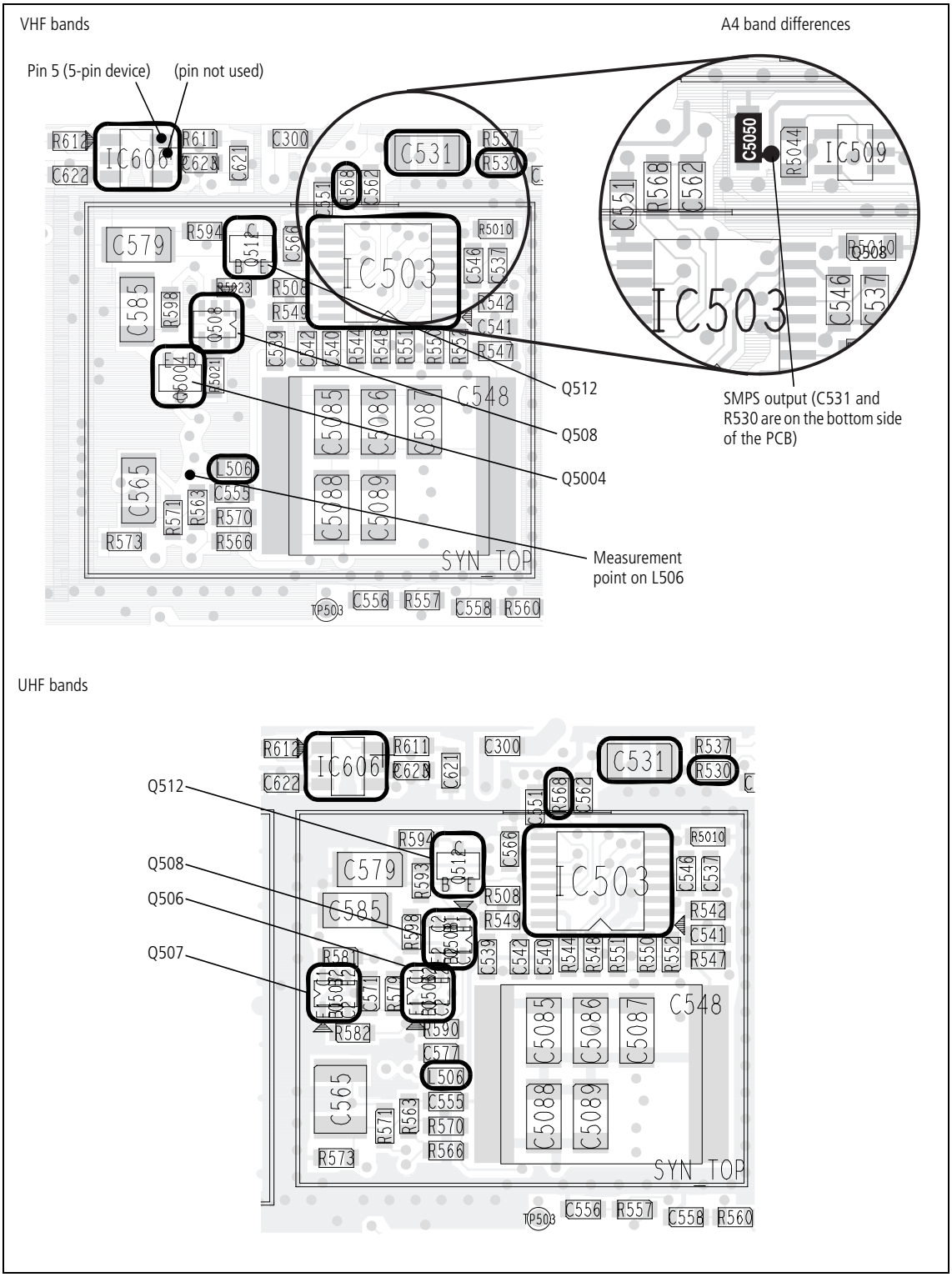

© Tait Electronics Limited November 2007

Figure 9.2 Synthesizer circuitry under the SYN TOP can and the 6V regulator IC606 (top side) (cont.)

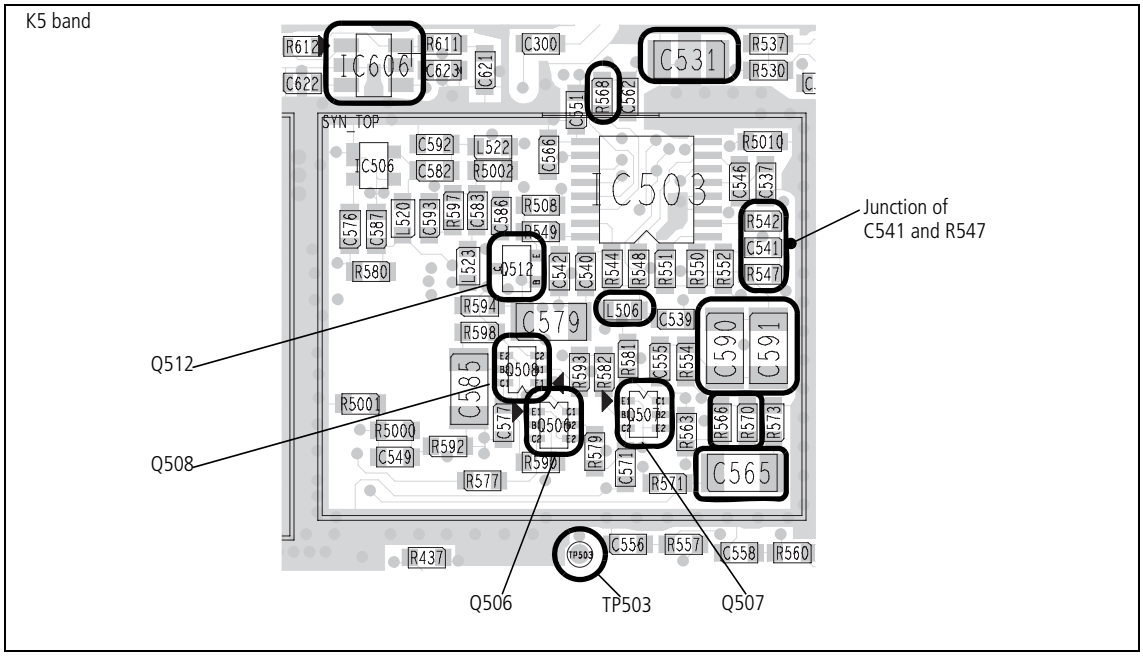

Task 3 — 14V Power Supply (B1 50W and K5: 15.5V)

First check the output VCL SUPPLY from the SMPS, which is itself provided with a 9V DC supply from a 9V regulator in the PSU module.

1. Remove the board from the chassis.

2. Place the radio in CCTM.

3. Measure the SMPS output VCL SUPPLY at the via between **C531** and **R530** (see **Figure 9.2**).

C531: 14.2V ± 0.3 DC B1 50W from board revision -04 and K5: 15.5V ± 0.3 DC

Note On A4 band radios, **C531** and **R530** are on the bottom side of the PCB. Measure the VCL SUPPLY voltage on the via beside **C5050**.

4. If the SMPS output is correct, go to Task 4. If it is not, go to Step 5.

5. Check the 9V supply at **Q500** and **R533** (see **Figure 9.3**).

Q500 and R533: 9.0V ± 0.3 DC

6. If the voltage is correct, go to Step 7. If it is not, the 9V regulator **IC601** is suspect; go to Task 3 of "Power Supply Fault Finding" on page 174.

7. Remove the FCL TOP can and check the SMPS circuit based on **Q500**, **Q502** and **L502** (see **Figure 9.3**).

Note On A4 band radios, these components are not located under the FCL TOP can (see **Figure 9.3**).

Remove the SYN BOT can and check **IC504** and **IC505** for shorts (see **Figure 9.4**); replace any suspect IC.

8. If a fault is found, repair the circuit, confirm the removal of the fault, and go to "Final Tasks" on page 163. If the repair failed or no fault could be found, replace the board and go to "Final Tasks" on page 163.

Task 4 — 6V Power Supply

If the output of the SMPS is correct, check the 6V DC supply next.

1. Measure the supply +6V0 at pin 4 of **IC606** (see **Figure 9.2**).

pin 4 of IC606: 6.0 ± 0.3V DC

2. If the voltage is correct, go to Task 5. If it is not, measure the 9V input at pin 5 of **IC606** (see **Figure 9.2**).

pin 5 of IC606: 9.0 ± 0.3V DC

3. If the voltage is correct, go to Step 4. If it is not, the 9V regulator **IC601** is suspect; go to Task 3 of "Power Supply Fault Finding" on page 174.

4. If the input to the regulator **IC606** is correct but not the output, check **IC606** (see **Figure 9.2**) and the associated circuitry; if necessary, replace **IC606**.

   Remove the SYN TOP can and check the C-multipliers **Q508** (pins 3, 4, 5) and **Q512** for shorts (see **Figure 9.2**); replace any suspect transistor.

5. If a fault is found, repair the circuit, confirm the removal of the fault, and go to "Final Tasks" on page 163. If the repair failed or no fault could be found, replace the board and go to "Final Tasks" on page 163.

© Tait Electronics Limited November 2007

Figure 9.3 Synthesizer circuitry under the FCL TOP can (top side)

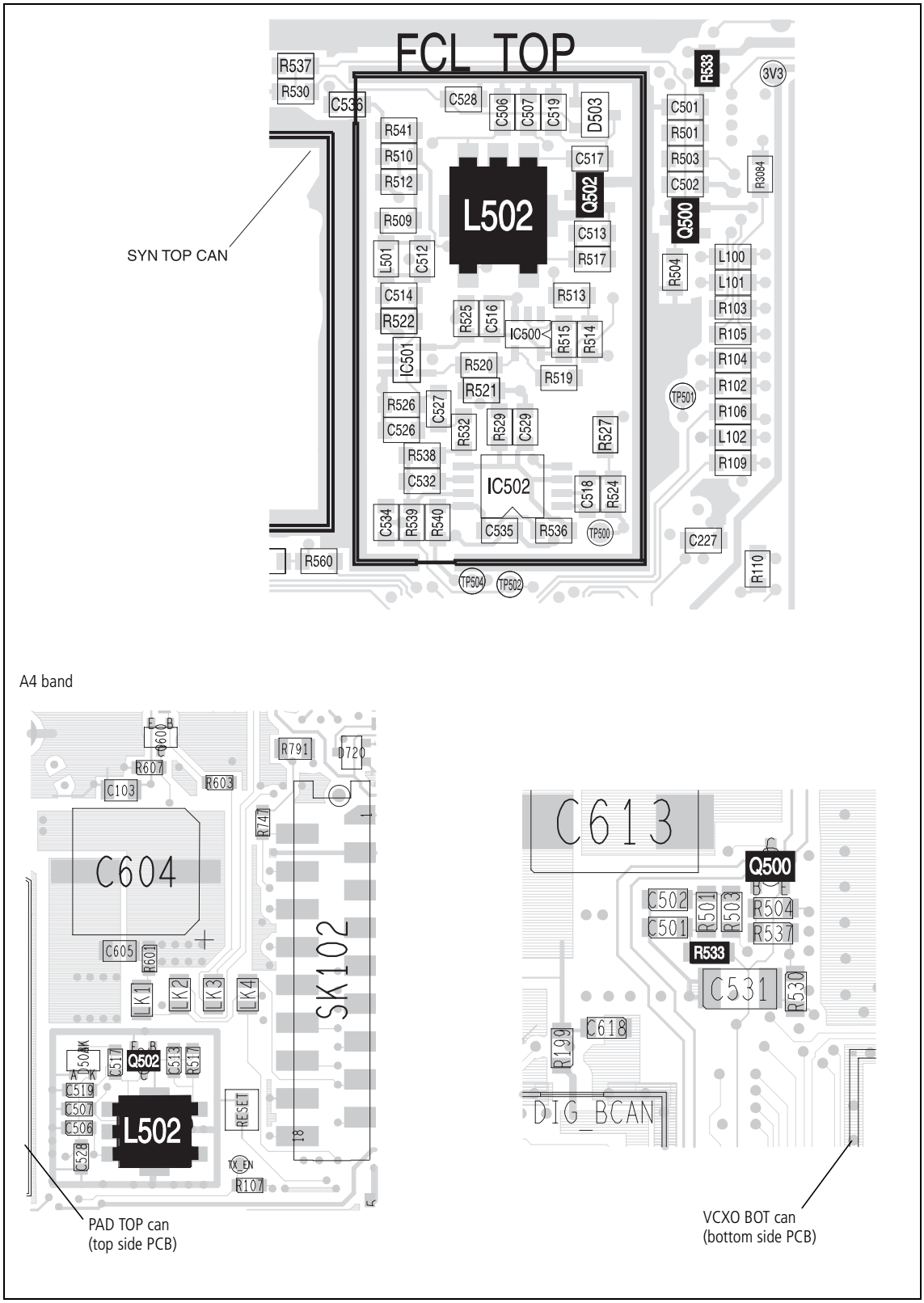

Figure 9.4 Synthesizer circuitry under the SYN BOT can (bottom side)

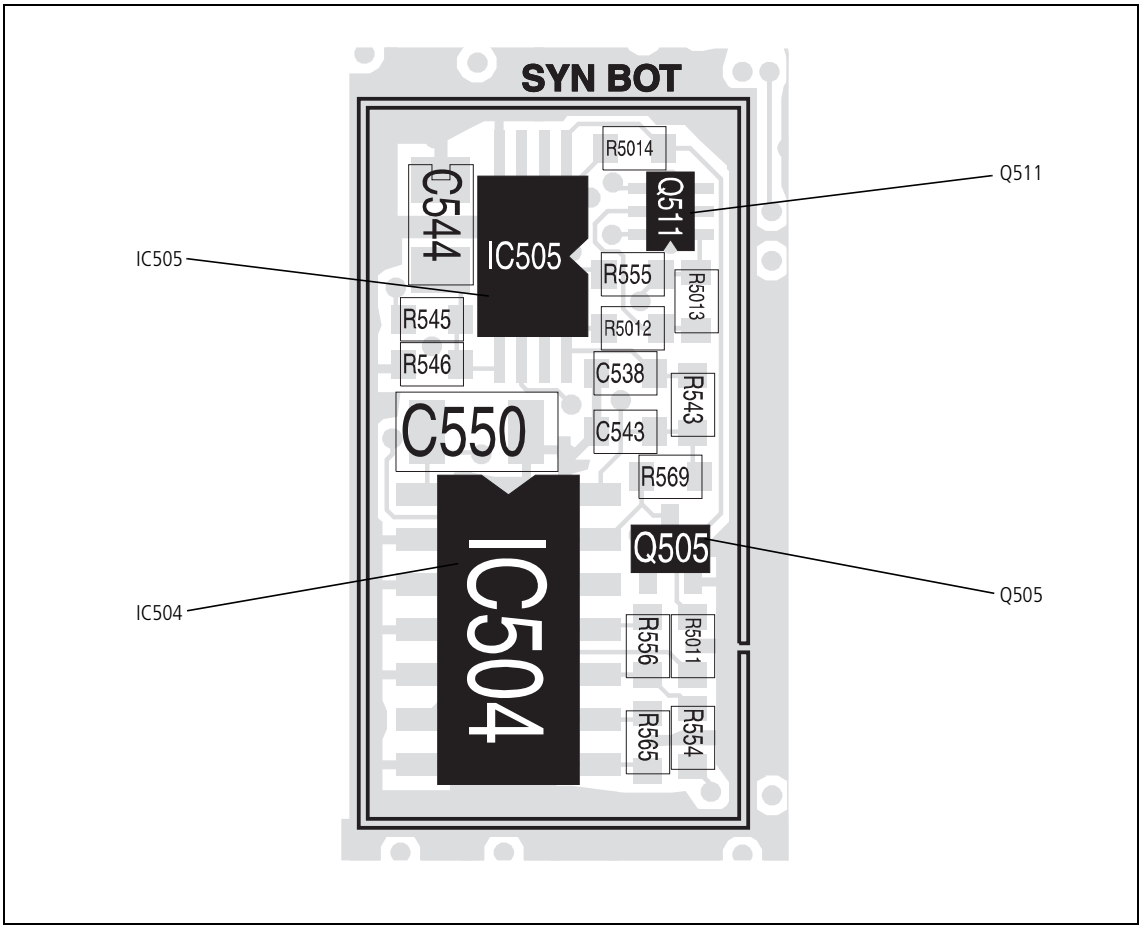

© Tait Electronics Limited November 2007

Task 5 — 5V Power Supply

If the SMPS output and 6V DC supply are correct, check the +5V DEC supply next.

1. Remove the SYN TOP can.

2. Measure the supply +5V DEC at pin 4 of **Q508** (see **Figure 9.2**).

pin 4 of Q508: 5.3 ± 0.3V DC

3. If the voltage is correct, go to Task 6. If it is not, go to Step 4 (UHF radios) or Step 5 (VHF radios).

4. For UHF and K5 band radios, check for faults in the C-multiplier **Q508** (pins 3, 4, 5) and the 5V and transmit-receive switches based on **Q506**, **Q507** and **Q508** (pins 1, 2, 6) (see **Figure 9.2**). Replace any suspect transistor. Conclude with Step 6.

5. For VHF radios, check for faults in the C-multiplier and 5V switch based on **Q508** and **Q5004** (see **Figure 9.2**). Remove the SYN TOP can (A4 band only) and VCO BOT can, and check the transmit-receive switch based on **Q5002** and **Q5003** (see **Figure 9.5**). Replace any suspect transistor. Conclude with Step 6.

6. If a fault is found, repair the circuit, confirm the removal of the fault, and go to "Final Tasks" on page 163. If the repair failed or no fault could be found, replace the board and go to "Final Tasks" on page 163.

© Tait Electronics Limited November 2007

Figure 9.5 Transmit-receive switch components — VHF bands (25W versions shown)

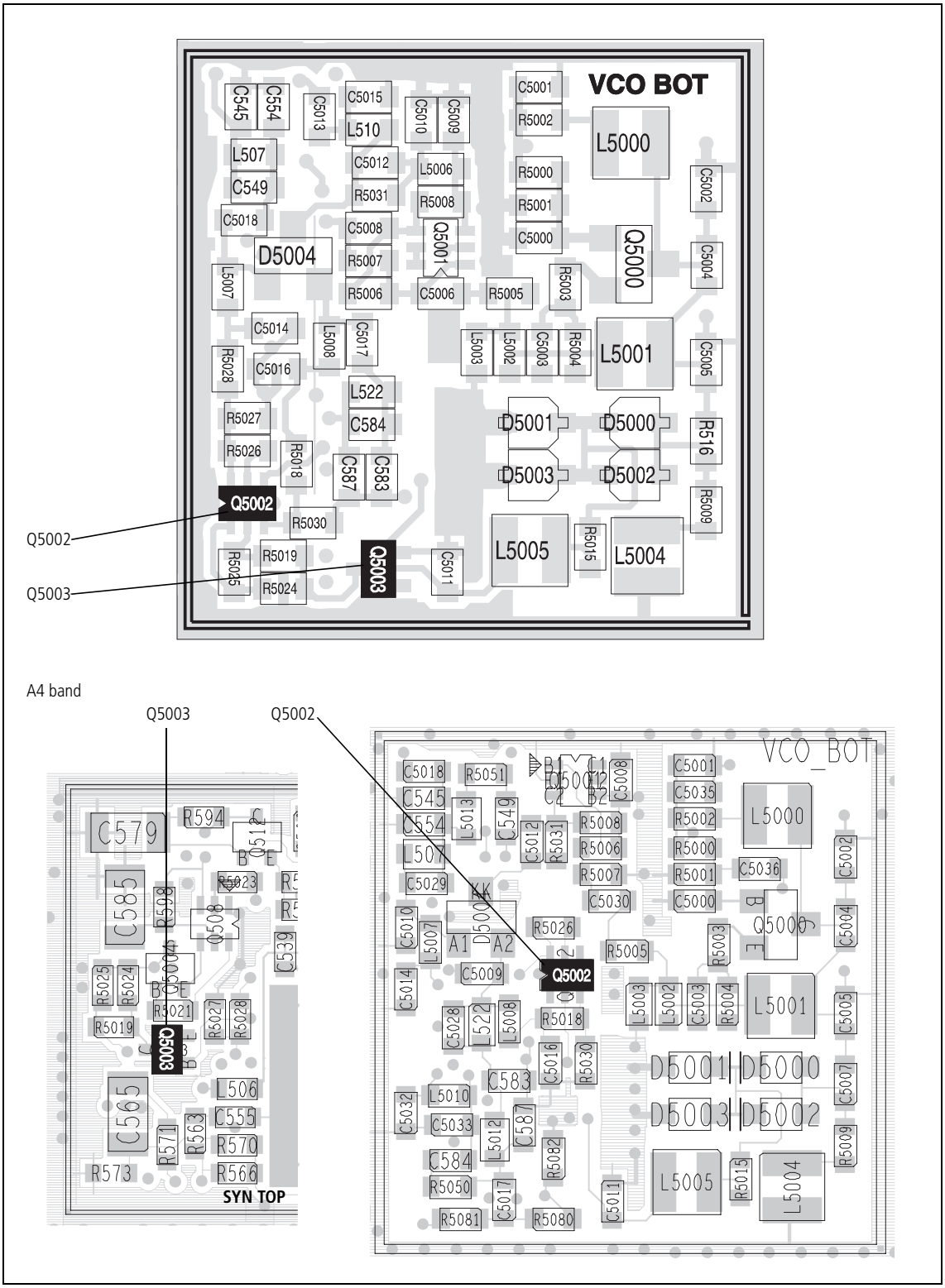

© Tait Electronics Limited November 2007

Task 6 — 3V Power Supply

If the SMPS output and the 6V and 5V supplies are correct, the remaining power supply to check is the 3V DC supply.

1. Measure the supply +3V0 AN at pins 7 and 15 of **IC503** (see **Figure 9.2**).

pins 7 and 15 of IC503: 2.9 ± 0.3V DC

2. If the voltage is correct, go to "Phase-locked Loop" on page 198. If it is not, go to Step 3.

3. Check the supply at **L506** (see **Figure 9.2**). The measurement point is the via shown in the figure.

L506: 2.9 ± 0.3V DC

4. If the voltage is correct, go to Step 5. If it is not, the 3V regulator **IC603** is suspect; go to Task 3 of "Power Supply Fault Finding" on page 174.

5. Check the components in the path from **L506** to **IC503**. Also check IC503; if necessary, replace IC503 (see **Figure 9.2**).

6. If a fault is found, repair the circuit, confirm the removal of the fault, and go to "Final Tasks" on page 163. If the repair failed or no fault could be found, replace the board and go to "Final Tasks" on page 163.

© Tait Electronics Limited November 2007

9.3 Phase-locked Loop

Introduction

If there is no fault with the power supplies, check the critical output from, and inputs to, the PLL:

- Task 7: supply for charge pump
- Task 8: reference frequency input
- Task 9: DIG SYN EN line input
- Task 10: SYN LOCK line output.

The measurement points for diagnosing faults concerning the PLL inputs and output are summarized in Figure 9.6.

Task 7 — Supply for Charge Pump

First check the supply for the charge pump of the PLL.

1. Measure the supply for the charge pump at pin 16 of **IC503** (see **Figure 9.2**).

pin 16 of IC503: 5.0 ± 0.3V DC

2. If the voltage is correct, go to Task 8. If it is not, go to Step 3.

3. Check the C-multiplier **Q512** (see **Figure 9.2**) and check **IC503** itself; if necessary, replace the transistor or IC.

4. If there is a fault, repair the circuit, confirm the removal of the fault, and go to "Final Tasks" on page 163. If the repair failed or no fault could be found, replace the board and go to "Final Tasks" on page 163.

© Tait Electronics Limited November 2007

Figure 9.6 Test and measurement points for the synthesizer PLL and loop filter

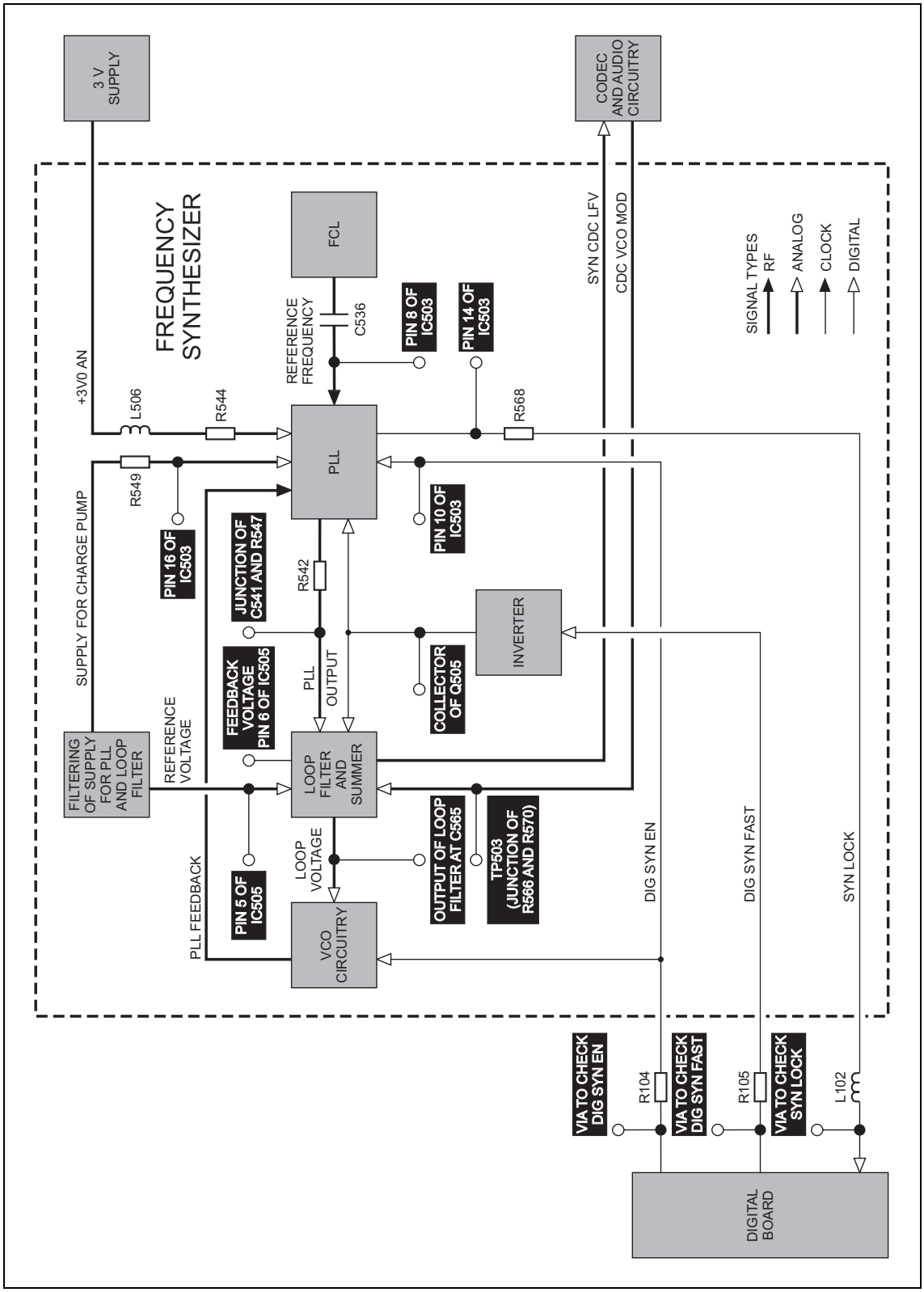

Figure 9.7 Components between the digital board and the frequency synthesizer

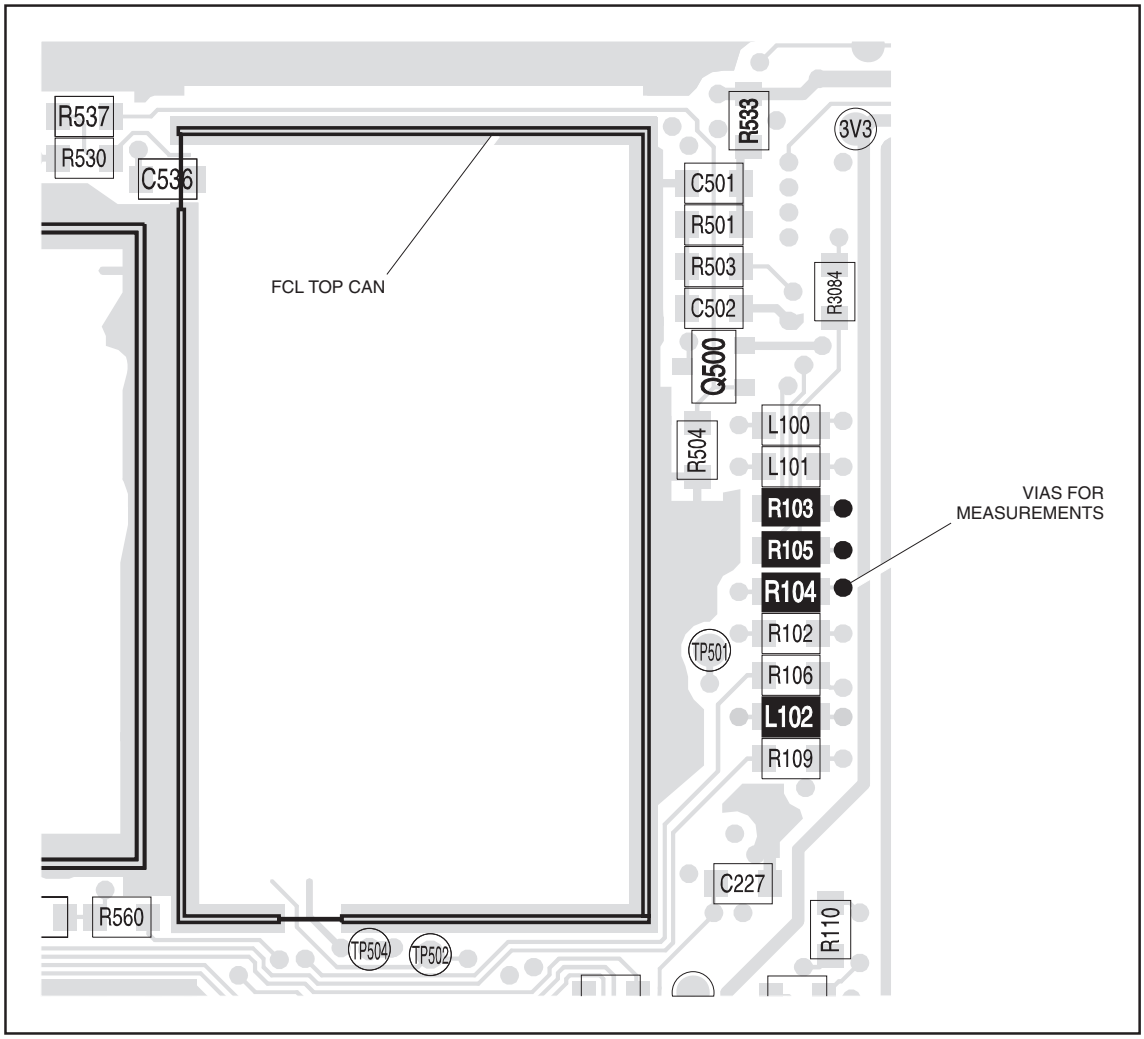

Task 8 — Reference Frequency

If the supply for the charge pump is correct, check the reference frequency input from the FCL to the PLL.

1. Measure the reference frequency at pin 8 of **IC503** (see **Figure 9.2**).

pin 8 of IC503: 13.012 ± 0.002 MHz and 1.1 ± 0.2 V_{pp}
A4 band: pin 8 of IC503: 2.612 ± 0.002 MHz and 1.1 ± 0.2 V_{pp}

2. If the signal is correct, go to Task 9. If it is not, go to Step 3.

3. Check **IC503** (see **Figure 9.2**). Replace IC503 if it is suspect.

4. Determine if the fault has been removed. If it has, go to "Final Tasks" on page 163. If it has not, the FCL is suspect; go to "Power Supply for FCL" on page 234.

© Tait Electronics Limited November 2007

Task 9 — DIG SYN EN Line

If the supply for the charge pump and the reference frequency are correct, check the DIG SYN EN line input.

1. Check the DIG SYN EN line at pin 10 of **IC503** (see **Figure 9.2**). Enter the CCTM command *334 0* to switch off the synthesizer, and measure the voltage at pin 10.

pin 10 of IC503: 0V DC (after entry of CCTM 334 0)

2. Enter the command *334 1* to switch on the synthesizer, and measure the voltage again.

pin 10 of IC503: 2.5 ± 0.3V DC (after entry of CCTM 334 1)

3. If the voltages measured in Step 1 and Step 2 are correct, go to Task 10. If they are not, go to Step 4.

4. Remove **R104** (see **Figure 9.7**) and repeat the above measurements as follows:

5. Enter the CCTM command *334 0* to switch off the synthesizer, and measure the voltage at the via between **R104** (see **Figure 9.7**) and the digital board.

via at R104: 0V DC (after entry of CCTM 334 0)

6. Enter the CCTM command *334 1* to switch on the synthesizer, and measure the voltage at the via between **R104** (see **Figure 9.7**) and the digital board.

via at R104: 3.3 ± 0.3V DC (after entry of CCTM 334 1)

7. If the voltages measured in Step 5 and Step 6 are still not correct, the digital board is faulty; replace the board and go to "Final Tasks" on page 163. If the voltages are correct, go to Step 8.

8. There is a fault between the digital board and **IC503**. Locate the fault. Check and resolder **R104** in position (see **Figure 9.7**), and check for continuity between pin 10 of IC503 (see **Figure 9.2**) and the digital board via R104.

9. If there is a fault, repair the circuit, confirm the removal of the fault, and go to "Final Tasks" on page 163. If the repair failed or no fault could be found, replace the board and go to "Final Tasks" on page 163.

© Tait Electronics Limited November 2007

Task 10 — SYN LOCK Line

If all the critical inputs to the PLL are correct, check the SYN LOCK line output.

1. Enter the CCTM command *72* to determine the lock status in receive mode. Note the status.

   lock status=**xyz** (**x**=RF PLL; **y**=FCL; **z**=LO2) (0=not in lock; 1=in lock)

2. Check the SYN LOCK line by measuring the voltage at pin 14 of **IC503** (see **Figure 9.2**). The voltage should depend on the lock status as follows:

   lock status 111 or 110: 3.0 ± 0.3V DC at pin 14 of IC503
   lock status 011 or 010: 0V DC at pin 14 of IC503

3. If the voltage measured in Step 2 is correct, go to "Loop Filter" on page 204. If it is not, go to Step 4.

4. Check for continuity between pin 14 of **IC503** and the digital board via **R568** (see **Figure 9.2**) and **L102** (see **Figure 9.7**).

5. If there is a fault, go to Step 6. If there is no fault, the digital board is faulty; replace the board and go to "Final Tasks" on page 163.

6. Repair the fault. Confirm the removal of the fault and go to "Final Tasks" on page 163. If the repair failed or no fault could be found, replace the board and go to "Final Tasks" on page 163.

© Tait Electronics Limited November 2007

Figure 9.8 Synthesizer circuitry under the SYN TOP can (top side)

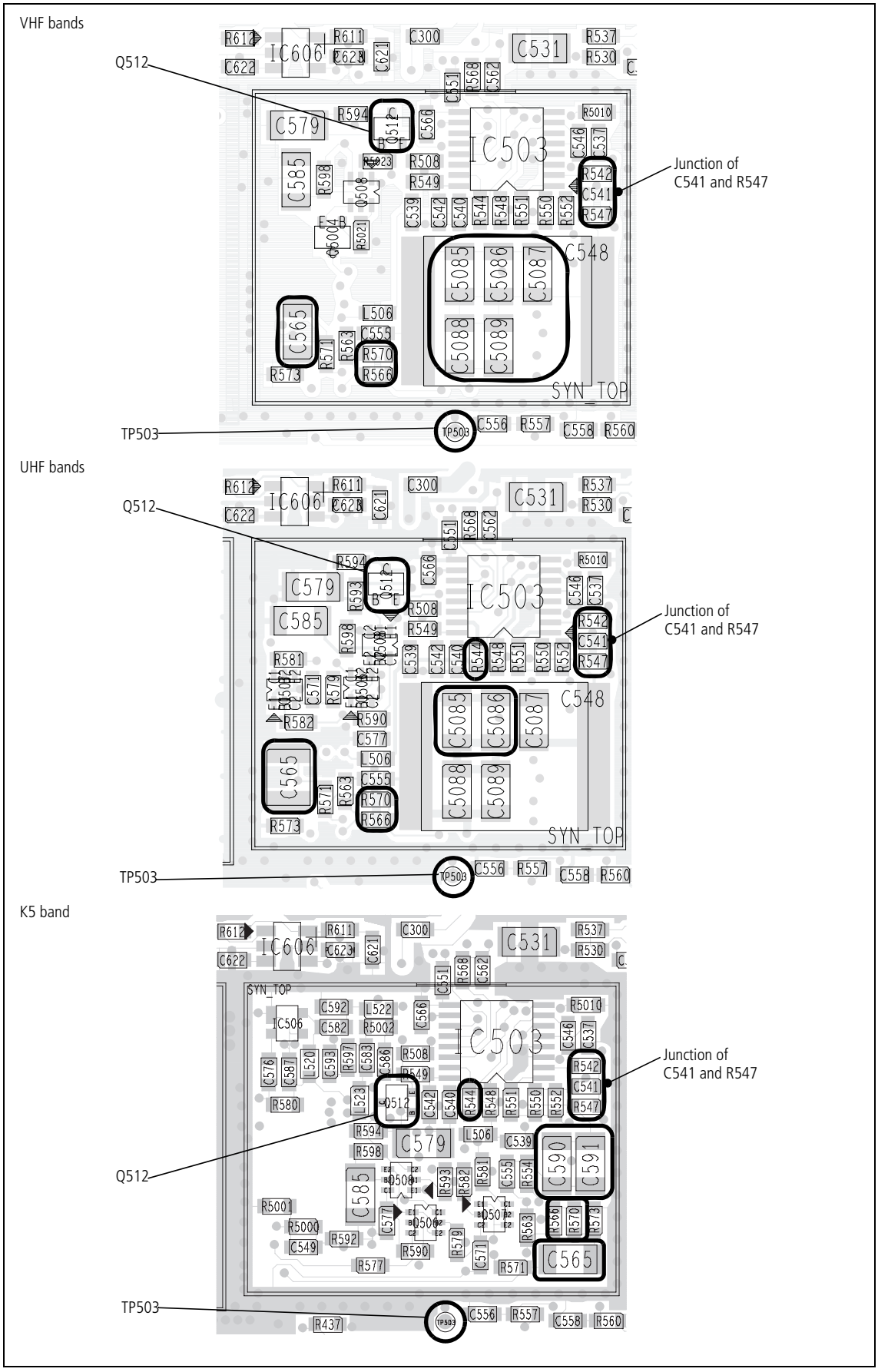

9.4 Loop Filter

Introduction

If the power supplies for the frequency synthesizer are correct, and the PLL is functioning properly, check the loop filter next:

- Task 11: check loop voltage
- Task 12: VCO fault
- Task 13: check reference voltage
- Task 14: check feedback voltage
- Task 15: check DIG SYN FAST line
- Task 16: check TP503 test point.

The test and measurement points for diagnosing faults concerning the loop filter are summarized in Figure 9.6.

Task 11 — Check Loop Voltage

Check whether the loop filter is functioning correctly by measuring the loop voltage at the output of the filter at C565.

1. If not already done, remove the board from the chassis, remove the SYN TOP can, and place the radio in CCTM.

2. Remove **R542** (see **Figure 9.8**).

3. Using an oscilloscope, proceed as follows to observe the voltage at **C565** before and after grounding the junction between **C541** and **R547** (see **Figure 9.8**):

   While holding the oscilloscope probe at C565, use a pair of tweezers to momentarily ground the junction. The voltage should change to the following value (if it is not already at this value):

C565: 13.3 ± 0.3V DC

4. If the loop voltage is correct, go to Step 5. If it is not, the loop-filter circuitry is suspect; go to Task 13.

5. Proceed as follows to observe the voltage at **C565** before and after applying 3V DC to the junction of **C541** and **R547**; there is a convenient 3V level at **R544** (see **Figure 9.8**):

   While holding the probe at C565, use the tweezers to momentarily apply 3V DC to the junction; do not touch the board with your hand, and do not allow the tweezers to touch any cans when you remove them. The voltage should change to:

C565: < 0.5V DC

6. If the loop voltage is correct, go to Task 12. If it is not, the loop-filter circuitry is suspect; go to Task 13.

© Tait Electronics Limited November 2007

Task 12 — VCO Faulty

If the loop voltage is correct, the loop filter is functioning properly. The VCO and related circuitry is therefore suspect. The section to proceed to depends on the type of the radio and the nature of the fault.

1. With a UHF radio go to Step 2. With a VHF radio go to "VCO and Related Circuitry (VHF Radios)" on page 224.

2. If a UHF radio exhibits a lock error or a receive fault. the receive VCO is suspect; go to "Receive VCO and Related Circuitry (UHF Radios)" on page 209.

   If it exhibits a system error or a transmit fault, the transmit VCO is suspect; go to "Transmit VCO and Related Circuitry (UHF and 800MHz Radios)" on page 218.

Task 13 — Check Reference Voltage

If the loop-filter circuitry is suspect, first check the reference voltage for the filter.

1. Remove the SYN BOT can.

2. Measure the reference voltage at pin 5 of **IC505** (see **Figure 9.4**). The result should be:

IC505 pin 5:	2.8 ± 0.1V DC

3. If the voltage is correct, go to Task 14. If it is not, the reference-voltage circuitry is suspect; go to Step 4.

4. Resolder **R542** in position and check the C-multiplier **Q512** (see **Figure 9.8**).

5. If a fault is found, repair the circuit, and confirm that the reference voltage is now correct. If it is, go to "Final Tasks" on page 163. If it is not, or if no fault could be found, replace the board and go to "Final Tasks" on page 163.

© Tait Electronics Limited November 2007

Task 14 — Check Feedback Voltage

If the loop filter is suspect but the reference voltage is correct, check the feedback voltage.

1. Measure the feedback voltage at pin 6 of **IC505** (see **Figure 9.4**). The result should be:

IC505 pin 6:	2.8 ± 0.1V DC

2. If the voltage is not correct, the loop filter is faulty; go to Step 3. If the voltage is correct, resolder **R542** in position (see **Figure 9.8**) and go to Task 15.

3. Check **IC504**, **IC505**, **Q511** (see **Figure 9.4**) and associated components.

4. Check the following components (see **Figure 9.8**):

A4 band:	**C5085** to **C5089**
B1 band:	**C5085** to **C5089**
C0 band:	**C5085** to **C5088**
D1 band:	**C5085** to **C5088**
H5 band:	**C5085** and **C5086**
H6/H7 bands:	**C5085** and **C5086**
K5 band:	**C590** and **C591**

Note On early issue boards, **C548** is fitted instead of these components.

5. If a fault is found, repair the circuit, repeat the measurement of the feedback voltage in Step 1, and resolder **R542** in position (see **Figure 9.8**).

6. If the feedback voltage is now correct, go to "Final Tasks" on page 163. If it is not, or if no fault could be found, replace the board and go to "Final Tasks" on page 163.

© Tait Electronics Limited November 2007

Task 15 — Check DIG SYN FAST Line

If the loop filter is suspect but the reference and feedback voltages are correct, check the DIG SYN FAST line, which is input to the inverter.

1. Enter the CCTM command *389 1* to set the synthesizer mode to fast.

2. Measure the voltage at the collector of **Q505** (see **Figure 9.4**). The result should be:

Q505 collector: 14.2 ± 0.3V DC (after entry of CCTM 389 1) B1 50W from board revision -04 and K5: 15.5V ± 0.3 DC

3. Enter the CCTM command *389 0* to set the mode to slow.

4. Measure the voltage at the collector of **Q505** (see **Figure 9.4**). The result should be:

Q505 collector: 0V DC (after entry of CCTM 389 0)

5. If the voltages measured in Step 2 and Step 4 are correct, go to Task 16. If they are not, go to Step 6.

6. Remove **R105** (see **Figure 9.7**).

7. Enter the CCTM command *389 1* to set the mode to fast.

8. Measure the voltage at the via between **R105** and the digital board (see **Figure 9.7**). The result should be:

via at R105: 0V DC (after entry of CCTM 389 1)

9. Enter the CCTM command *389 0* to set the mode to slow.

10. Measure the voltage at the via between **R105** and the digital board (see **Figure 9.7**). The result should be:

via at R105: 3.3 ± 0.3V DC (after entry of CCTM 389 0)

11. If the voltages measured in Step 8 and Step 10 are correct, go to Step 12. If they are not, the digital board is faulty; replace the board and go to "Final Tasks" on page 163.

12. Check and resolder **R105** in position (see **Figure 9.7**), and check for continuity between the collector of **Q505** (see **Figure 9.4**) and the digital board via R105.

13. If a fault is found, repair the circuit, and confirm that the voltages are now correct. If they are, go to "Final Tasks" on page 163. If they are not, or if no fault could be found, replace the board and go to "Final Tasks" on page 163.

© Tait Electronics Limited November 2007

Task 16 — Check TP503 Test Point

If the reference voltage, feedback voltage, and DIG SYN FAST line are all correct, check the voltage at the TP503 test point.

1. Measure the voltage at the **TP503 test point** (see **Figure 9.8**). The oscilloscope should show a DC level less than 3.0V with no sign of noise or modulation.

TP503 test point: < 3.0V DC

2. If the correct result is obtained, go to Step 3. If it is not, go to Step 5.

3. The loop filter is faulty but the above measurements do not provide more specific information. Check **IC504**, **IC505**, **Q511** (see **Figure 9.4**) and associated components.

4. Check the following components (see **Figure 9.8**), then conclude with Step 9:

A4 band:	**C5085** to **C5089**
B1 band:	**C5085** to **C5089**
C0 band:	**C5085** to **C5088**
D1 band:	**C5085** to **C5088**
G2 band:	**C5085** and **C5086**
H5 band:	**C5085** and **C5086**
H6/H7 bands:	**C5085** and **C5086**
K5 band:	**C590** and **C591**

Note On early issue boards, **C548** may be fitted instead of these components.

5. Remove **R566** and **R570** (see **Figure 9.8**), which provide a modulation path to the VCO(s).

6. Repeat the measurement of Step 1.

7. If the correct result is now obtained, go to Step 8. If the correct result is still not obtained, the CODEC and audio circuitry is suspect; resolder **R566** and **R570** in position (see **Figure 9.8**), and go to "CODEC and Audio Fault Finding" on page 399.

8. Resolder **R566** and **R570** in position (see **Figure 9.8**).

9. Check **IC504** (pins 6, 8, 9) (see **Figure 9.4**) and the associated components in the loop filter.

10. If a fault is found, repair the circuit, and confirm that the voltages are now correct. If they are, go to "Final Tasks" on page 163. If they are not, or if no fault could be found, replace the board and go to "Final Tasks" on page 163.

© Tait Electronics Limited November 2007

9.5 Receive VCO and Related Circuitry (UHF Radios)

Introduction

If there is no fault with the power supplies, the PLL inputs and output, and the loop filter, check the VCO and related circuitry. The procedures in this section apply only to UHF radios with a lock error or receive fault, and therefore with suspect receive VCO and related circuitry. (The minimum and maximum receive frequencies for the different UHF frequency bands are defined in Table 9.3.) There are six aspects:

- Task 17: check receive VCO
- Task 18: repair PLL feedback
- Task 19: repair receive VCO
- Task 20: check switching to receive mode
- Task 21: repair switching network
- Task 22: check receive buffer amplifier (not for the K5 band).

The measurement points for diagnosing faults in the VCO and related circuitry are summarized in Figure 9.9 and Figure 9.10.

Table 9.3 Minimum and maximum receive frequencies for the different UHF frequency bands

Frequency band	Receive frequency in MHz	
	Minimum	Maximum
G2	284 ± 5	420 ± 5
H5	337 ± 5	441 ± 5
H6/H7	378 ± 5	498 ± 5
K5	768 ± 5	834 ± 5

Figure 9.9 Measurement points for the VCO in UHF radios—K5 band

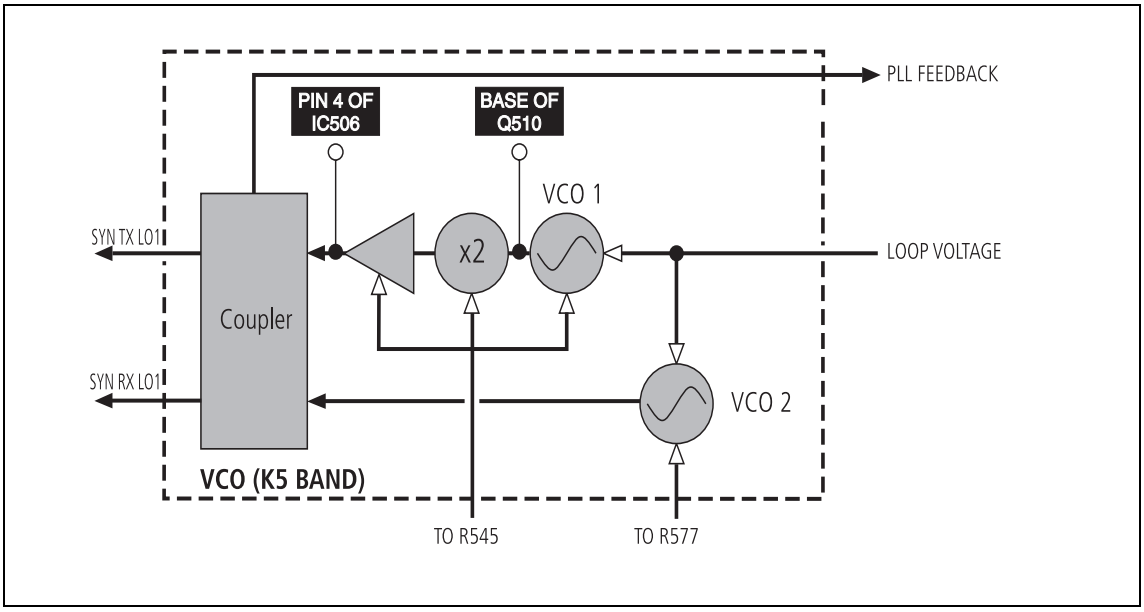

Figure 9.10 Measurement points for the VCO and related circuitry in UHF radios (except K5 band)

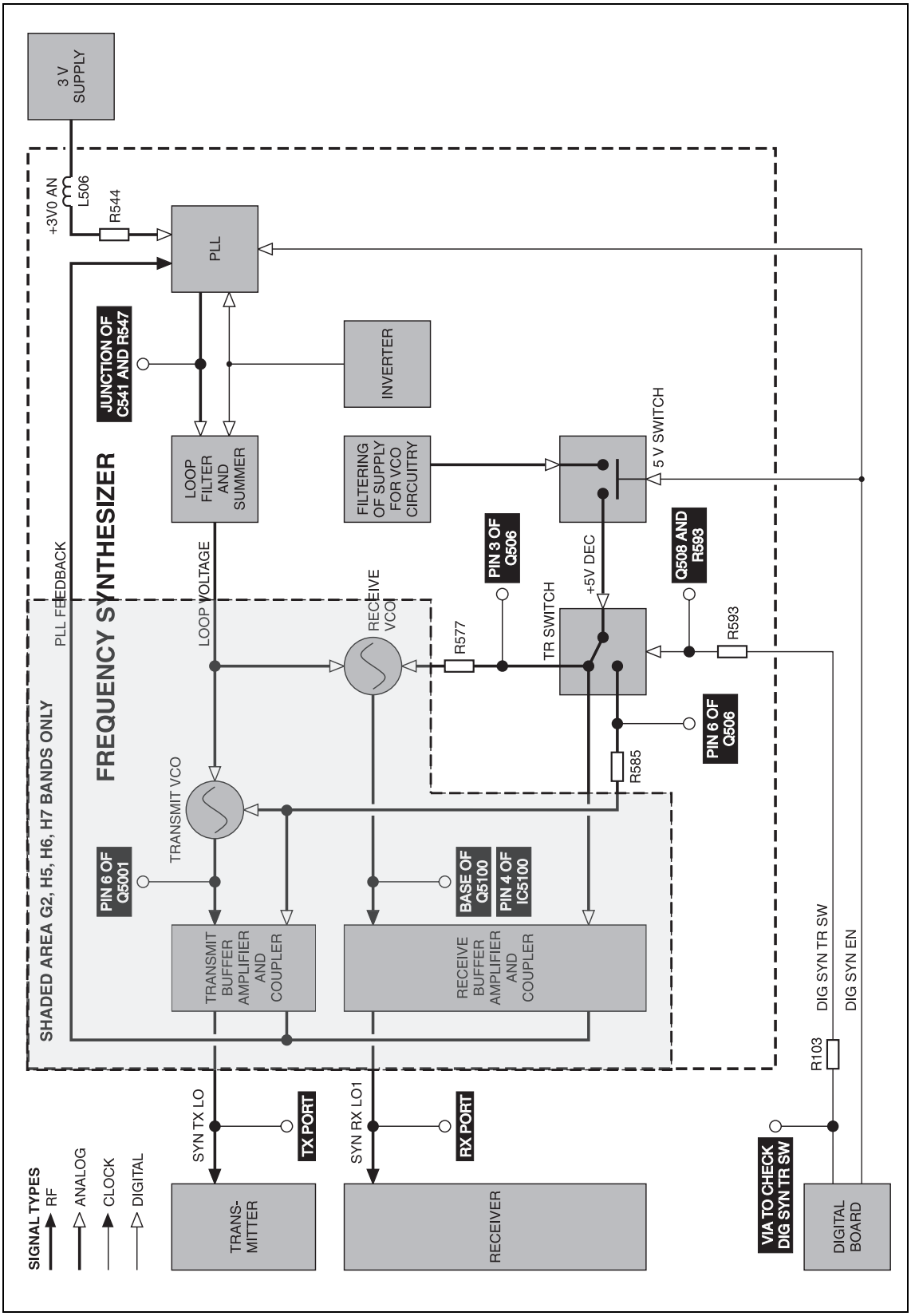

© Tait Electronics Limited November 2007

Task 17 — Check Receive VCO

Check that the correct receive frequency is synthesized. This is the frequency of the receive VCO output SYN RX LO1 at the RX port shown in Figure 9.11.

1. Enter the CCTM command *335 0* to set the transmit-receive switch off (receive mode).

2. Using a frequency counter, proceed as follows to observe the receive frequency at the RX port before and after grounding the junction between **C541** and **R547** (see **Figure 9.11**):

   While holding the probe from the counter on the RX port, use a pair of tweezers to momentarily ground the junction. The frequency should change to:

RX port: maximum receive frequency (see Table 9.3)

   The loop filter will hold its output steady at 13.3 V (14.7 V for the K5 band). This should result in a frequency equal to the maximum given in **Table 9.3**.

3. If the receive frequency measured in Step 2 is correct, go to Step 4. If it is incorrect, go to Task 19, but if no frequency is detected, go to Task 20.

4. Proceed as follows to observe the receive frequency at the RX port before and after applying 3 V DC to the junction of **C541** and **R547**; there is a convenient 3 V level at **R544** (see **Figure 9.11**):

   While holding the probe on the RX port, use the tweezers to momentarily apply 3 V DC to the junction; do not touch the board with your hand, and do not allow the tweezers to touch any cans when you remove them. The frequency should change to:

RX port: minimum receive frequency (see Table 9.3)

   The loop filter will hold its output steady at about 0 V. This should result in a frequency equal to the minimum given in **Table 9.3**.

5. If the receive frequency measured in Step 4 is correct, go to Task 18. If it is incorrect, go to Task 19. If no frequency is detected, go to Task 20.

© Tait Electronics Limited November 2007

Figure 9.11 Synthesizer circuitry under the SYN TOP and VCO TOP cans (UHF radio, top side)

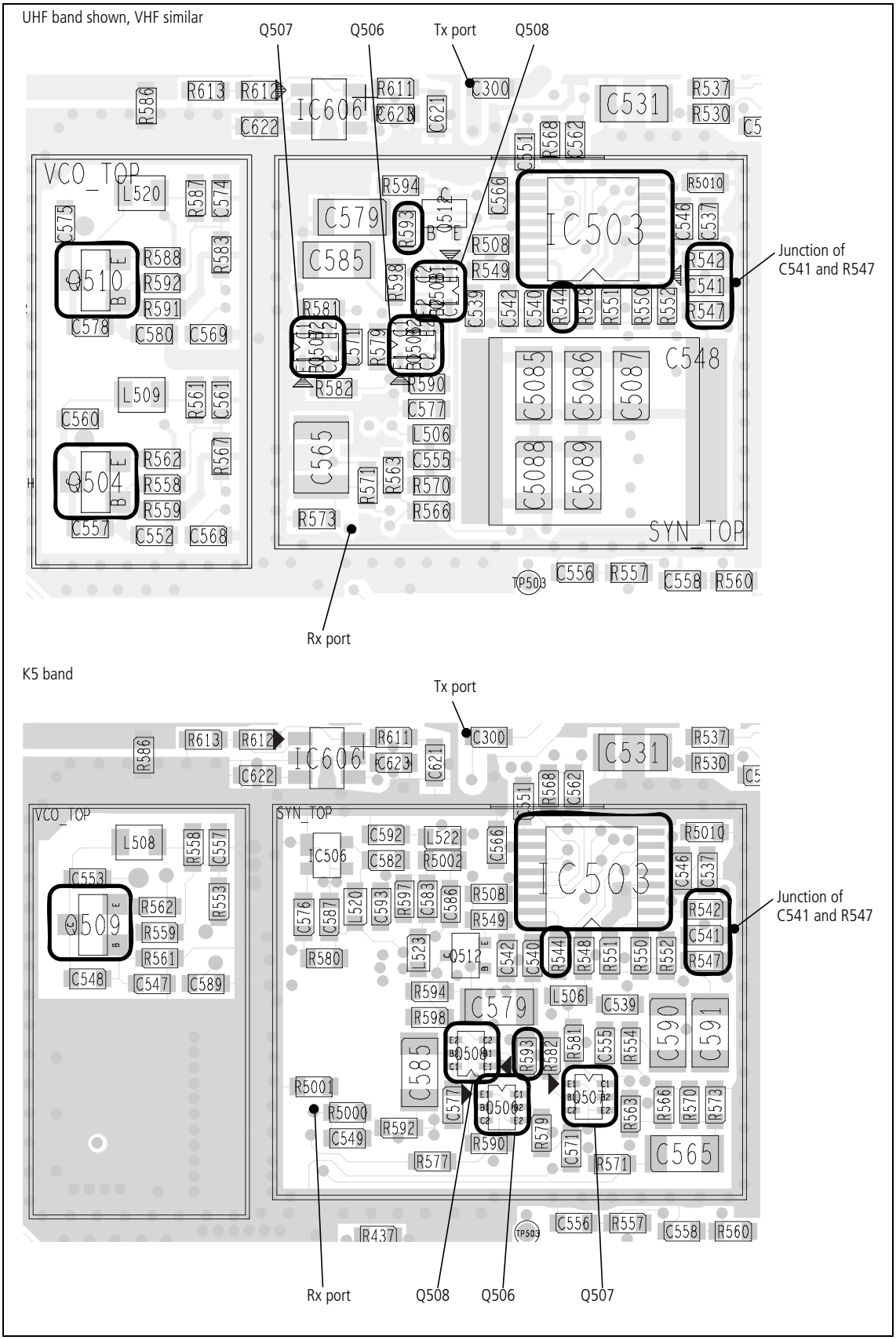

© Tait Electronics Limited November 2007

Task 18 — Repair PLL feedback

If both the minimum and maximum receive frequencies are correct, the PLL feedback is suspect.

1. Resolder **R542** in position (see **Figure 9.11**).

2. Remove the VCO BOT can.

3. Replace the components **C567**, **R574** (see **Figure 9.12**) and **IC503** (see **Figure 9.11**).

4. Also check the second stage of the receive buffer amplifier based on **IC5100** (see **Figure 9.12**). Repair any fault.

5. Confirm that the fault in the radio has been removed. If it has, go to "Final Tasks" on page 163. If it has not, replace the board and go to "Final Tasks" on page 163.

Task 19 — Repair Receive VCO

If either or both the minimum and maximum receive frequencies are incorrect, the receive VCO circuitry is faulty.

1. For all bands except K5, remove the VCO TOP can.
   For the K5 band, remove the VCO BOT can.

2. Check the receive VCO. The circuitry is based on **Q504** (see **Figure 9.11** for all bands except K5 and **Figure 9.12 for the K5 band**).

3. If a fault is found, repair it and go to Step 4. If no fault is found, go to Step 6.

4. Repeat the frequency measurements in Step 2 and Step 4 of Task 17.

5. If the frequencies are now correct, resolder **R542** in position (see **Figure 9.11**), and go to "Final Tasks" on page 163. If they are still not correct, go to Step 6.

6. Resolder **R542** in position (see **Figure 9.11**). Replace the board and go to "Final Tasks" on page 163.

© Tait Electronics Limited November 2007

Figure 9.12 Synthesizer circuitry under the VCO BOT (bottom side)

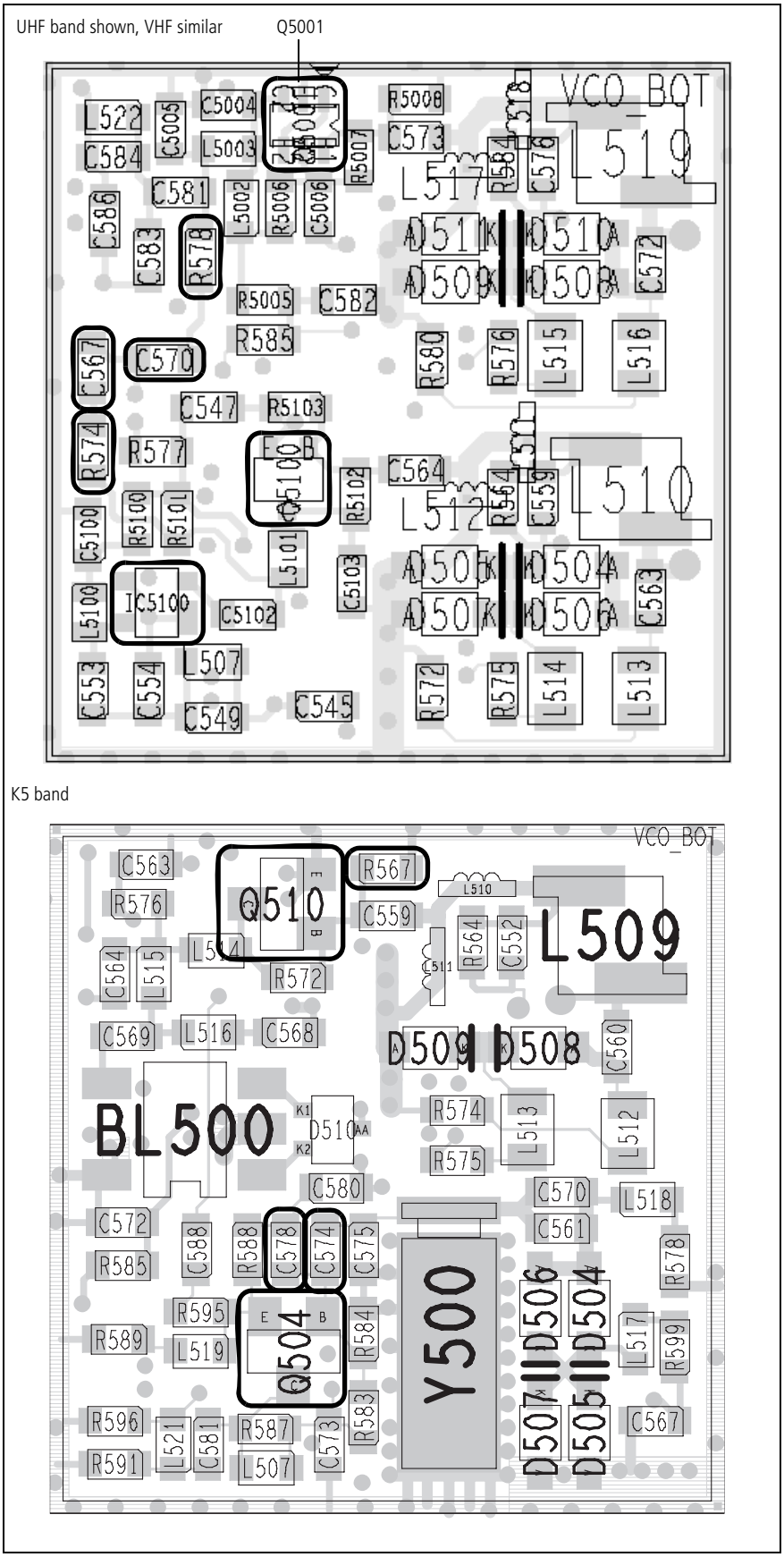

© Tait Electronics Limited November 2007

Task 20 — Check Switching to Receive Mode

If no receive frequency is detected in the check of the receive VCO, first check that the transmit-receive switch is functioning correctly.

1. Resolder **R542** in position (see **Figure 9.11**).

2. Enter the CCTM command *335 0* to switch on the supply to the receive VCO.

3. Measure the voltage at the first collector (pin 3) of **Q506** (see **Figure 9.11**). The voltage should be:

pin 3 of Q506: 5.0 ± 0.3V DC (after entry of CCTM 335 0)

4. Enter the CCTM command *335 1* to switch off the supply.

5. Again measure the voltage at the first collector of **Q506**.

pin 3 of Q506: 0V DC (after entry of CCTM 335 1)

6. If the voltages measured in Step 3 and Step 5 are correct, go to Task 22. If they are not, the switching network is suspect; go to Task 21.

© Tait Electronics Limited November 2007

Task 21 — Repair Switching Network

If the transmit-receive switch is not functioning correctly, first check the DIG SYN TR SW line to confirm that the digital board is not the cause. If the digital board is not faulty, the switching network is suspect.

1. Enter the CCTM command *335 0* to set the transmit-receive switch off (receive mode). Measure the voltage on the DIG SYN TR SW line between **Q508** and **R593** (see **Figure 9.11**).

R593: 0V DC (after entry of CCTM 335 0)

2. Enter the CCTM command *335 1* to set the transmit-receive switch on (transmit mode). Again measure the voltage at **R593**.

R593: 2.0 ± 0.5V DC (after entry of CCTM 335 1)

3. If the voltages measured in Step 1 and Step 2 are correct, go to Step 9. If they are not, remove **R103** (see **Figure 9.7**) and go to Step 4.

4. Enter the CCTM command *335 0* and measure the voltage at the via between **R103** and the digital board (see **Figure 9.7**).

via at R103: 0V DC (after entry of CCTM 335 0)

5. Enter the CCTM command *335 1* and again measure the voltage at the via between **R103** and the digital board.

via at R103: 3.3 ± 0.3V DC (after entry of CCTM 335 1)

6. If the voltages measured in Step 4 and Step 5 are correct, go to Step 7. If they are not, the digital board is faulty; resolder **R103** in position (see **Figure 9.7**), replace the board and go to "Final Tasks" on page 163.

7. Check and resolder **R103** in position (see **Figure 9.7**), and check for continuity between **Q508** and the digital board via **R593** (see **Figure 9.11**) and R103.

8. If no fault is found, go to Step 9. If a fault is found, repair the circuit, confirm that the voltages are now correct, and go to "Final Tasks" on page 163 If the repair failed, replace the board and go to "Final Tasks" on page 163.

9. Check the circuitry for the transmit-receive and 5V switches (based on **Q506**, **Q507** and **Q508**) (see **Figure 9.11**).

10. If a fault is found, repair the circuit, confirm that the voltages are now correct, and go to "Final Tasks" on page 163. If the repair failed or the fault could not be found, replace the board and go to "Final Tasks" on page 163.

© Tait Electronics Limited November 2007

Task 22 — Check Receive Buffer Amplifier (not for the K5 band)

If no receive frequency is detected but the switching network is not faulty, check the receive buffer amplifier. If the amplifier is not faulty, there might be a fault in the receive VCO that was not detected earlier.

1. Remove the VCO BOT can.

2. Check the receive buffer amplifier in receive mode: Enter the CCTM command *335 0* to set the transmit-receive switch off.

3. Measure the voltages at the base of **Q5100** and at pin 4 of **IC5100** (see **Figure 9.12**).

base of Q5100:	0.7 ± 0.1V DC (receive mode)
pin 4 of IC5100:	2.0 ± 0.5V DC (receive mode)

4. Then check the receive buffer amplifier in transmit mode: Enter the CCTM command *335 1* to set the transmit-receive switch on.

5. Again measure the voltages of **Q5100** and **IC5100**.

base of Q5100:	0V DC (transmit mode)
pin 4 of IC5100:	0V DC (transmit mode)

6. If the voltages are correct, the receive VCO is suspect; go to Step 7. If they are not, the receive buffer amplifier is suspect; go to Step 9.

7. Remove the VCO TOP can.

8. Check the receive VCO circuitry based on **Q504** (see **Figure 9.11**). Conclude with Step 10.

9. Check the first buffer stage (based on **Q5100**) and the second stage (based on **IC5100**) (see **Figure 9.12**).

10. If a fault is found, repair the circuit, and confirm that the voltages are now correct. If they are, go to "Final Tasks" on page 163. If they are not, or if no fault could be found, replace the board and go to "Final Tasks" on page 163.

© Tait Electronics Limited November 2007

9.6 Transmit VCO and Related Circuitry (UHF and 800 MHz Radios)

Introduction

If there is no fault with the power supplies, the PLL inputs and output, and the loop filter, check the VCO and related circuitry. The procedures in this section apply only to UHF radios with a system error or transmit fault, and therefore with suspect transmit VCO and related circuitry. (The minimum and maximum transmit frequencies for the different UHF frequency bands are defined in Table 9.4.) There are five aspects:

- Task 23: check transmit VCO
- Task 24: repair PLL feedback
- Task 25: repair transmit VCO
- Task 26: check switching to transmit mode
- Task 27: check transmit buffer amplifier.

The measurement points for diagnosing faults in the VCO and related circuitry are summarized in Figure 9.9 and Figure 9.10.

Table 9.4 Minimum and maximum transmit frequencies for the different UHF frequency bands

Frequency band	Transmit frequency in MHz	
	Minimum	Maximum
G2	322 ± 5	421 ± 5
H5	371 ± 5	492 ± 5
H6/H7	419 ± 5	545 ± 5
K5	695 ± 5	890 ± 5

© Tait Electronics Limited November 2007

Task 23 — Check Transmit VCO

Check that the correct transmit frequency is synthesized. This is the frequency of the transmit VCO output SYN TX LO at the TX port shown in Figure 9.11.

1. Enter the CCTM command *335 1* to set the transmit-receive switch on (transmit mode).

2. Using a frequency counter, proceed as follows to observe the transmit frequency at the TX port before and after grounding the junction between **C541** and **R547** (see **Figure 9.11**):

   While holding the probe from the counter on the TX port, use a pair of tweezers to momentarily ground the junction. The frequency should change to:

TX port: maximum transmit frequency (see Table 9.4)

   The loop filter will hold its output steady at 13.3 V. This should result in a frequency equal to the maximum given in **Table 9.4**.

3. If the transmit frequency measured in Step 2 is correct, go to Step 4. If it is incorrect, go to Task 25. If no frequency is detected, go to Task 26.

4. Proceed as follows to observe the transmit frequency at the TX port before and after applying 3 V DC to the junction of **C541** and **R547**; there is a convenient 3 V level at **R544** (see **Figure 9.11**):

   While holding the probe on the TX port, use the tweezers to momentarily apply 3 V DC to the junction; do not touch the board with your hand, and do not allow the tweezers to touch any cans when you remove them. The frequency should change to:

TX port: minimum transmit frequency (see Table 9.4)

   The loop filter will hold its output steady at about 0 V. This should result in a frequency equal to the minimum given in **Table 9.4**.

5. If the transmit frequency measured in Step 4 is correct, go to Task 24. If it is incorrect, go to Task 25. If no frequency is detected, go to Task 26.

© Tait Electronics Limited November 2007

Task 24 — Repair PLL feedback

If both the minimum and maximum transmit frequencies are correct, the PLL feedback is suspect.

1. Resolder **R542** in position (see **Figure 9.11**).
2. Remove the VCO BOT can.
3. Replace the components **C570**, **R578** (see **Figure 9.12**) and **IC503** (see **Figure 9.11**).
4. Confirm that the fault in the radio has been removed. If it has, go to "Final Tasks" on page 163. If it has not, replace the board and go to "Final Tasks" on page 163.

Task 25 — Repair Transmit VCO

If either or both the minimum and maximum transmit frequencies are incorrect, the transmit VCO circuitry is faulty.

1. Remove the VCO TOP can.
2. Check the transmit VCO. The circuitry is based on **Q510** for all bands except K5 and **Q509** for the K5 band (see **Figure 9.11**).
3. If a fault is found, repair it and go to Step 4. If no fault is found, go to Step 6.
4. Repeat the frequency measurements in Step 2 and Step 4 of Task 23.
5. If the frequencies are now correct, resolder **R542** in position (see **Figure 9.11**), and go to "Final Tasks" on page 163. If they are still not correct, go to Step 6.
6. Resolder **R542** in position (see **Figure 9.11**). Replace the board and go to "Final Tasks" on page 163.

© Tait Electronics Limited November 2007

Task 26 — Check Switching to Transmit Mode

If no transmit frequency is detected in the check of the transmit VCO, first check that the transmit-receive switch is functioning correctly.

1. Resolder **R542** in position (see **Figure 9.11**).

2. Enter the CCTM command *335 1* to switch on the supply to the transmit VCO.

3. Measure the voltage at the second collector (pin 6) of **Q506** (see **Figure 9.11**). The voltage should be:

pin 6 of Q506: 5.0 ± 0.3V DC (after entry of CCTM 335 1)

4. Enter the CCTM command *335 0* to switch off the supply.

5. Again measure the voltage at the second collector of **Q506**.

pin 6 of Q506: 0V DC (after entry of CCTM 335 0)

6. If the voltages measured in Step 2 and Step 4 are correct, go to Task 27. If they are not, the switching network is suspect; go to Task 21.

© Tait Electronics Limited November 2007

Task 27 — Check Transmit Buffer Amplifier

If no transmit frequency is detected but the switching network is not faulty, check the transmit buffer amplifier. If the amplifier is not faulty, there might be a fault in the transmit VCO that was not detected earlier.

For all bands except K5:

1. Remove the VCO BOT can.

2. Check the transmit buffer amplifier in receive mode: Enter the CCTM command *335 0* to set the transmit-receive switch off.

3. Measure the voltage at pin 6 of **Q5001** (see **Figure 9.12**).

pin 6 of Q5001: 0V DC (receive mode)

4. Check the transmit buffer amplifier in transmit mode: Enter the CCTM command *335 1* to set the transmit-receive switch on.

5. Measure the voltage at pin 6 of **Q5001**.

pin 6 of Q5001: 0.7 ± 0.1V DC (transmit mode)

6. If the voltages are correct, the transmit VCO is suspect; go to Step 7. If they are not, the transmit buffer amplifier is suspect; go to Step 9.

7. Remove the VCO TOP can.

8. Check the transmit VCO circuitry based on **Q510** (see **Figure 9.11**). Conclude with Step 10.

9. Check the buffer circuitry based on **Q5001** (see **Figure 9.12**).

10. If a fault is found, repair the circuit, and confirm that the voltages are now correct. If they are, go to "Final Tasks" on page 163. If they are not, or if no fault could be found, replace the board and go to "Final Tasks" on page 163.

For the K5 band:

1. Remove the SYN TOP can.

2. Check the transmit buffer amplifier in receive mode: Enter the CCTM command *335 0* to set the transmit-receive switch off.

3. Measure the voltage at pin 4 of **IC506** (see Figure 9.11).

pin 6 of IC506: 0V DC (receive mode)

4. Check the transmit buffer amplifier in transmit mode: Enter the CCTM command *335 1* to set the transmit-receive switch on.

5. Measure the voltage at pin 4 of **IC506**.

pin 4 of IC506: 5 ± 0.1 V DC (transmit mode)

© Tait Electronics Limited November 2007

6. If the voltages are correct, go to Step 7. If they are not, check the transmit buffer circuitry based on **IC506** (see Figure 9.11). If this repairs the fault, conclude with Step 14.

7. Remove the VCO BOT can.

8. Check the VCO buffer amplifier in receive mode. Enter the CCTM command *335 1* to set the transmit-receive switch off.

9. Measure the voltage at the base of **Q510** (see Figure 9.12).

base of Q510: 0V DC (receive mode)

10. Check the VCO buffer amplifier in transmit mode. Enter the CCTM command *335 1* to set the transmit-receive switch on.

11. Measure the voltage at the base of **Q510**.

base of Q510: 0.7 ± 0.1V DC (transmit mode)

12. If the voltages are correct, the transmit VCO is suspect. Go to Step 13. If they are not, check the VCO buffer circuitry based on **Q510** (see Figure 9.12). If this repairs the fault, conclude with Step 14.

13. Check the transmit VCO circuitry based on **Q509** (see **Figure 9.11**). Conclude with Step 14.

14. If a fault is found, repair the circuit, and confirm that the voltages are now correct. If they are, go to "Final Tasks" on page 163. If they are not, or if no fault could be found, replace the board and go to "Final Tasks" on page 163.

© Tait Electronics Limited November 2007

9.7 VCO and Related Circuitry (VHF Radios)

Introduction

If there is no fault with the power supplies, the PLL inputs and output, and the loop filter, check the VCO and related circuitry. The procedures in this section apply only to VHF radios; the VHF frequency bands are defined in Table 9.5. There are six aspects:

- Task 28: check VCO
- Task 29: repair PLL feedback
- Task 30: repair VCO
- Task 31: check transmit-receive switch
- Task 32: repair switching network
- Task 33: check buffer amplifier.

The measurement points for diagnosing faults in the VCO and related circuitry are summarized in Figure 9.13.

Table 9.5 Minimum and maximum frequencies for the different VHF frequency bands

Frequency band	Frequency in MHz	
	Minimum	Maximum
A4	55 ± 5	125 ± 5
B1 25 W	84 ± 5	200 ± 5
B1 50 W	95 ± 5	190 ± 5
C0	137 ± 5	247 ± 5
D1	167 ± 5	287 ± 5

© Tait Electronics Limited November 2007

Figure 9.13 Measurement points for the VCO and related circuitry in VHF radios

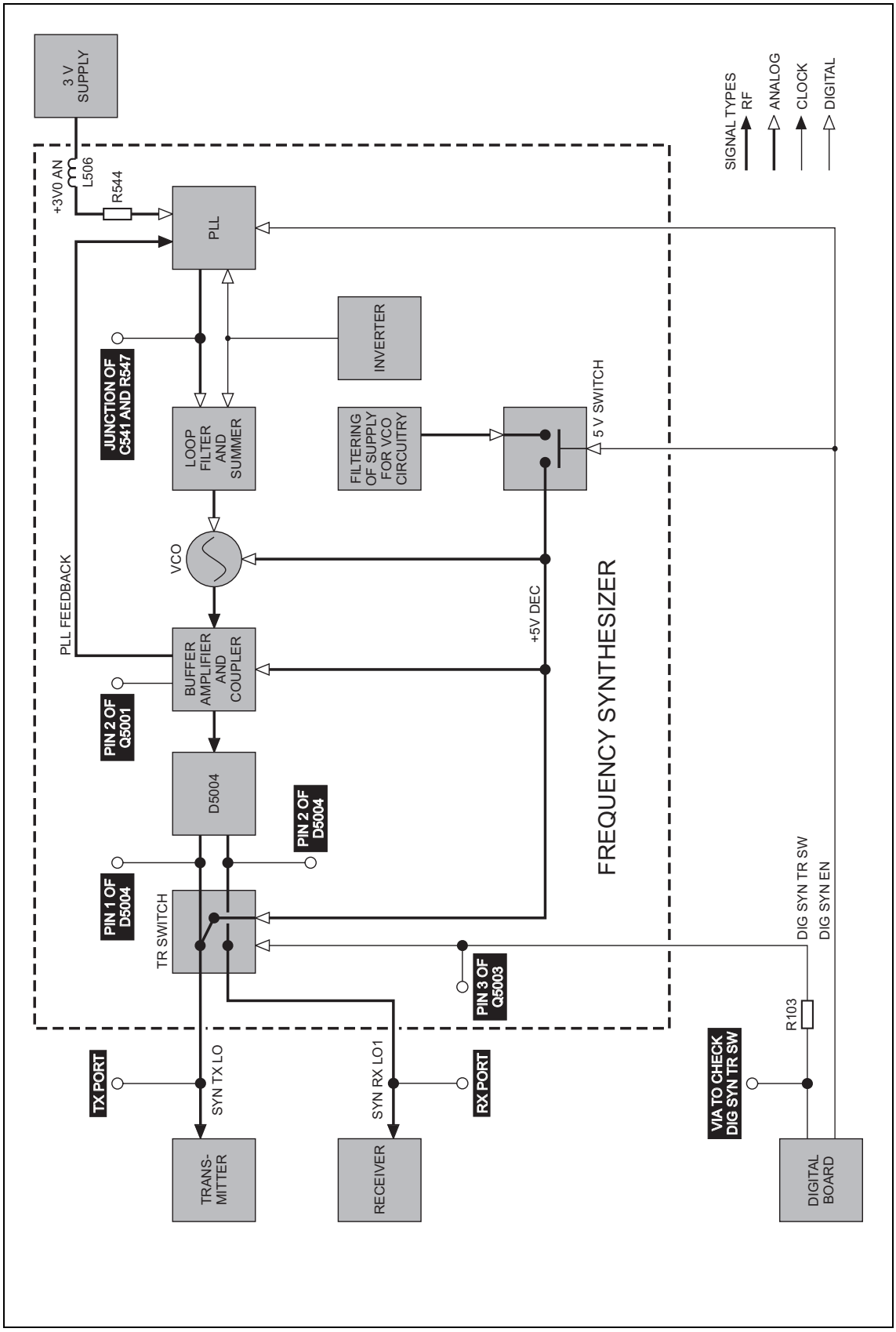

Task 28 — Check VCO

Check that the correct receive and transmit frequencies are synthesized. The receive frequency is that of the VCO output SYN RX LO1 at the RX port shown in Figure 9.14. The transmit frequency is that of the output SYN TX LO at the TX port.

1. Enter the CCTM command *335 1* to set the transmit-receive switch on (transmit mode).

2. Using a frequency counter, proceed as follows to observe the transmit frequency at the TX port before and after grounding the junction between **C541** and **R547** (see **Figure 9.14**):

   While holding the probe from the counter on the TX port, use a pair of tweezers to momentarily ground the junction. The frequency should change to:

TX port: maximum VCO frequency (see Table 9.5)

   The loop filter will hold its output steady at 13.3 V. This should result in a frequency equal to the maximum given in **Table 9.5**.

3. If the maximum frequency measured in Step 2 is correct, go to Step 4. If it is incorrect, go to Task 30, but if no frequency at all is detected, go to Task 31.

4. Enter the CCTM command *335 0* to set the transmit-receive switch off (receive mode).

5. Proceed as follows to observe the receive frequency at the RX port before and after applying 3 V DC to the junction of **C541** and **R547**; there is a convenient 3 V level at **R544** (see **Figure 9.11**):

   While holding the probe on the RX port, use the tweezers to momentarily apply 3 V DC to the junction; do not touch the board with your hand, and do not allow the tweezers to touch any cans when you remove them. The frequency should change to:

RX port: minimum VCO frequency (see Table 9.5)

   The loop filter will hold its output steady at about 0 V. This should result in a frequency equal to the minimum given in **Table 9.5**.

6. If the minimum frequency measured in Step 5 is correct, go to Task 29. If it is incorrect, go to Task 30. If no frequency is detected, go to Task 31.

© Tait Electronics Limited November 2007

Figure 9.14 Synthesizer circuitry under the SYN TOP can (VHF radios, top side)

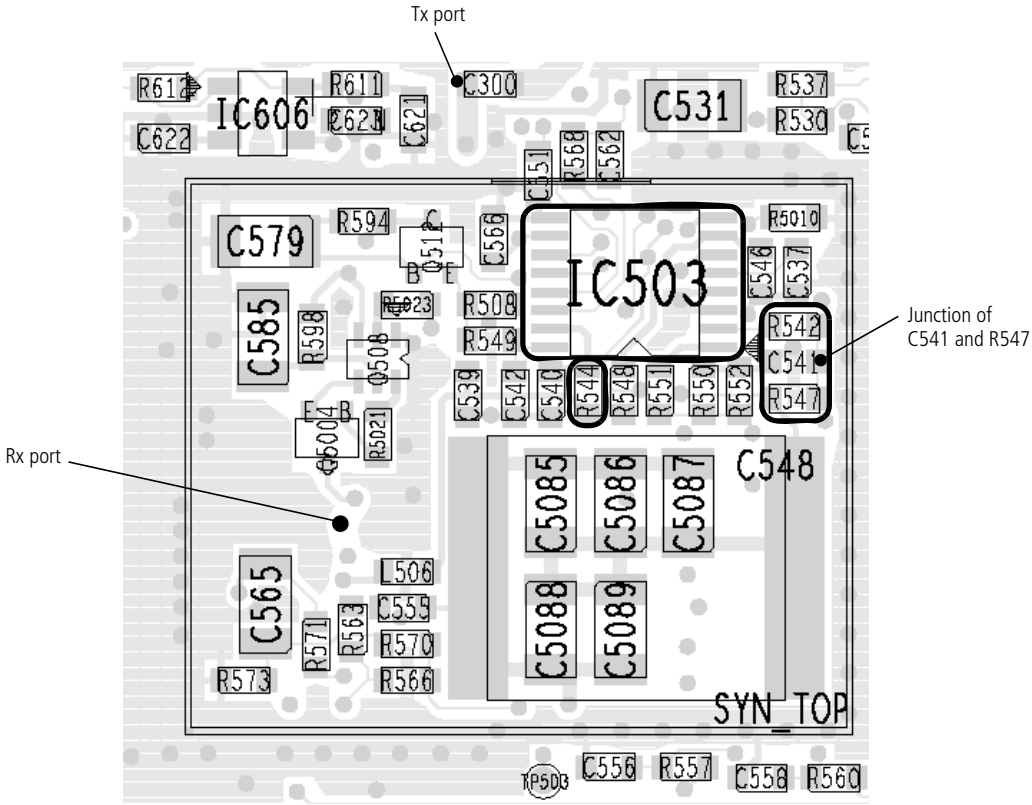

Task 29 — Repair PLL feedback

If both the maximum and minimum VCO frequencies are correct, then the PLL feedback is suspect.

1. Resolder **R542** in position (see **Figure 9.14**).

2. Remove the VCO BOT can.

3. Replace the components **L510** (see **Figure 9.15**) and **IC503** (see **Figure 9.14**).

Note On A4 band radios there is no L510. Replace L5010 instead.

4. Confirm that the fault in the radio has been removed. If it has, go to "Final Tasks" on page 163. If it has not, replace the board and go to "Final Tasks" on page 163.

© Tait Electronics Limited November 2007

Figure 9.15 Synthesizer circuitry under the VCO BOT can (VHF radios)

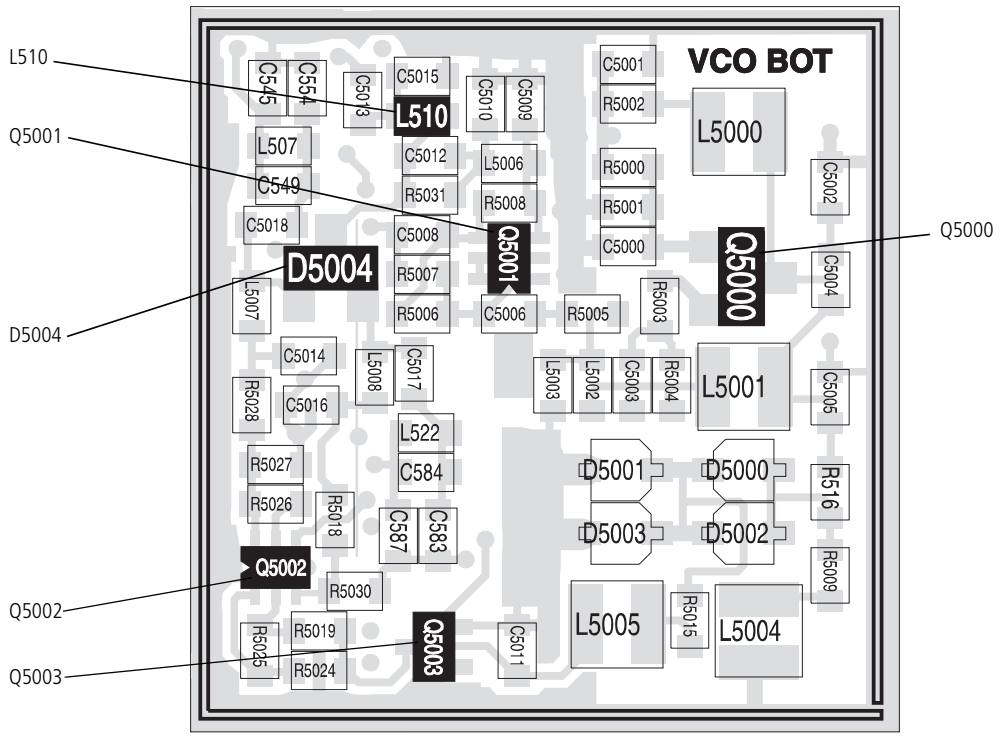

A4 band

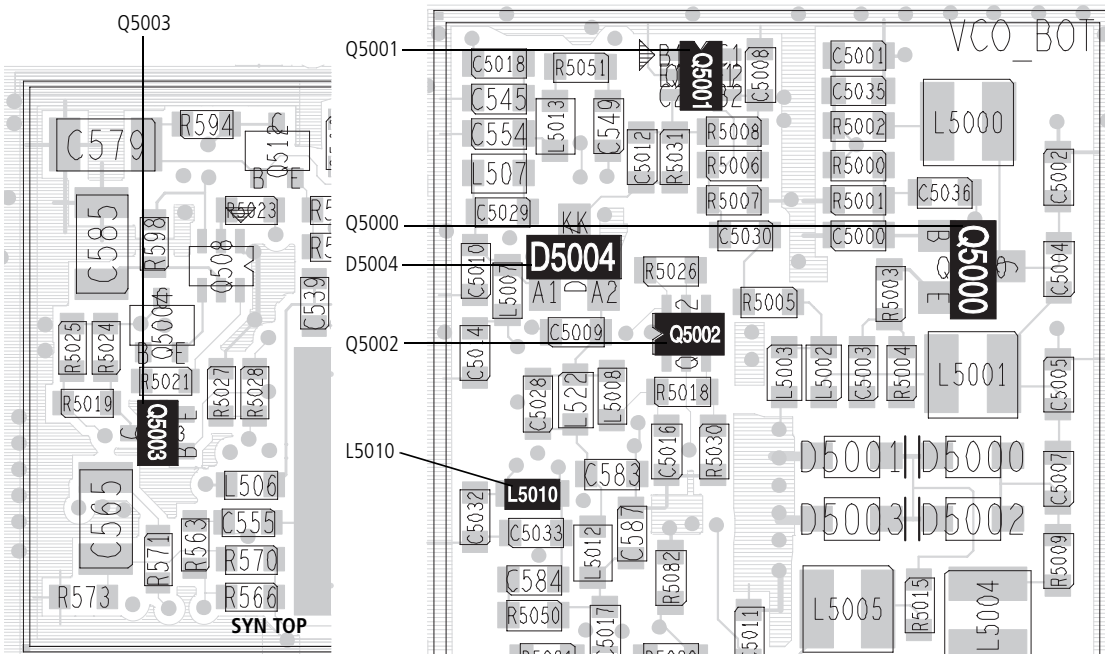

Task 30 — Repair VCO

If either or both the maximum and minimum frequencies are incorrect, the VCO circuitry is faulty.

1. Remove the VCO BOT can.

2. Check the VCO. The circuitry is based on **Q5000** (see **Figure 9.15**).

3. If a fault is found, repair it and go to Step 4. If no fault is found, go to Step 7.

4. Repeat Step 1 and Step 2 of Task 28 to measure the maximum VCO frequency.

5. Repeat Step 4 and Step 5 of Task 28 to measure the minimum VCO frequency.

6. If the frequencies are now correct, resolder **R542** in position (see **Figure 9.14**), and go to "Final Tasks" on page 163. If they are still not correct, go to Step 7.

7. Resolder **R542** in position (see **Figure 9.14**). Replace the board and go to "Final Tasks" on page 163.

© Tait Electronics Limited November 2007

Task 31 — Check Transmit-Receive Switch

If no frequency is detected in the check of the VCO, first check that the transmit-receive switch is functioning correctly.

1. Resolder **R542** in position (see **Figure 9.14**).

2. Remove the VCO BOT can.

3. Enter the CCTM command *335 0* to switch on the supply to the RX port.

4. Measure the voltage at pin 2 of **D5004** (see **Figure 9.15**). (Some RF noise might be observed.) The voltage should be:

pin 2 of D5004: 5.0 ± 0.3V DC (after entry of CCTM 335 0)

5. Enter the CCTM command *335 1* to switch off the supply.

6. Again measure the voltage at pin 2 of **D5004**.

pin 2 of D5004: 0V DC (after entry of CCTM 335 1)

7. If the voltages measured in Step 4 and Step 6 are correct, go to Step 8. If they are not, the switching network is suspect; go to Task 32.

8. Enter the CCTM command *335 1* to switch on the supply to the TX port.

9. Measure the voltage at pin 1 of **D5004** (see **Figure 9.15**). (Some RF noise might be observed.) The voltage should be:

pin 1 of D5004: 5.0 ± 0.3V DC (after entry of CCTM 335 1)

10. Enter the CCTM command *335 0* to switch off the supply.

11. Again measure the voltage at pin 1 of **D5004**.

pin 1 of D5004: 2.1 ± 0.4V DC (after entry of CCTM 335 0)

12. If the voltages measured in Step 9 and Step 11 are correct, go to Task 33. If they are not, the switching network is suspect; go to Task 32.

© Tait Electronics Limited November 2007

Task 32 — Repair Switching Network

If the transmit-receive switch is not functioning correctly, first check the DIG SYN TR SW line to confirm that the digital board is not the cause. If the digital board is not faulty, the switching network is suspect.

1. Enter the CCTM command *335 0* to set the transmit-receive switch off (receive mode). Measure the voltage on the DIG SYN TR SW line at pin 3 of **Q5003** (see **Figure 9.15**).

pin 3 of Q5003: 5.0 ± 0.3V DC (after entry of CCTM 335 0)

2. Enter the CCTM command *335 1* to set the transmit-receive switch on (transmit mode). Again measure the voltage at **Q5003**.

pin 3 of Q5003: 0V DC (after entry of CCTM 335 1)

3. If the voltages measured in Step 1 and Step 2 are correct, go to Step 9. If they are not, remove **R103** (see **Figure 9.7**) and go to Step 4.

4. Enter the CCTM command *335 0* and measure the voltage at the via between **R103** and the digital board (see **Figure 9.7**).

via at R103: 3.3 ± 0.3V DC (after entry of CCTM 335 0)

5. Enter the CCTM command *335 1* and again measure the voltage at the via between **R103** and the digital board.

via at R103: 0V DC (after entry of CCTM 335 1)

6. If the voltages measured in Step 4 and Step 5 are correct, go to Step 7. If they are not, the digital board is faulty; resolder **R103** in position (see **Figure 9.7**), replace the board and go to "Final Tasks" on page 163.

7. Check and resolder **R103** in position (see **Figure 9.7**), and check for continuity between **Q5003** (see **Figure 9.15**) and the digital board via R103.

8. If no fault is found, go to Step 9. If a fault is found, repair the circuit, confirm that the voltages are now correct, and go to "Final Tasks" on page 163. If the repair failed, replace the board and go to "Final Tasks" on page 163.

9. Check the circuitry for the transmit-receive and 5V switches (based on **Q5002** and **Q5003**) (see **Figure 9.15**).

10. If a fault is found, repair the circuit, confirm that the voltages are now correct, and go to "Final Tasks" on page 163. If the repair failed or the fault could not be found, replace the board and go to "Final Tasks" on page 163.

© Tait Electronics Limited November 2007

Task 33 — Check Buffer Amplifier

If no VCO frequency is detected but the switching network is not faulty, check the buffer amplifier. If the amplifier is not faulty, there might be a fault in the VCO that was not detected earlier.

1. Enter the CCTM command *335 0* to set the transmit-receive switch off.

2. Measure the voltage at pin 3 of **D5004** (see **Figure 9.15**). (Some RF noise might be observed.)

pin 3 of D5004: 4.2 ± 0.2V DC

3. Measure the voltage at pin 1 of **Q5001** (see **Figure 9.15**).

pin 1 of Q5001: 0.7 ± 0.2V DC

4. If the voltages measured in Step 2 and Step 3 are not correct, go to Step 5. If they are, check the VCO circuitry based on **Q5000** (see **Figure 9.15**). Conclude with Step 6.

5. The buffer amplifier is suspect. Check the buffer circuitry (based on **Q5001**) (see **Figure 9.15**).

6. If a fault is found, repair the circuit, and confirm that the voltages are now correct. If they are, go to "Final Tasks" on page 163. If they are not, or if no fault could be found, replace the board and go to "Final Tasks" on page 163.

© Tait Electronics Limited November 2007

9.8 Power Supply for FCL

Fault-Diagnosis Stages

Indications of a fault in the FCL will have been revealed by the initial checks in "Initial Checks" on page 186 and the PLL checks in "Phase-locked Loop" on page 198. In the latter case a fault with the reference frequency input from the FCL to the PLL will imply that the FCL is suspect. Fault diagnosis of the FCL is divided into four stages:

- check power supply
- check VCXO and TCXO outputs
- check signals at TP501 and TP502
- check VCXO and CODEC circuitry.

The checking of the power supply is given in this section in Task 34 below. The remaining three stages are covered in "VCXO and TCXO Outputs" to "VCXO and CODEC Circuitry" respectively. The test and measurement points for diagnosing faults in the FCL are summarized in Figure 9.16.

© Tait Electronics Limited November 2007

Figure 9.16 Test and measurement points the FCL circuitry

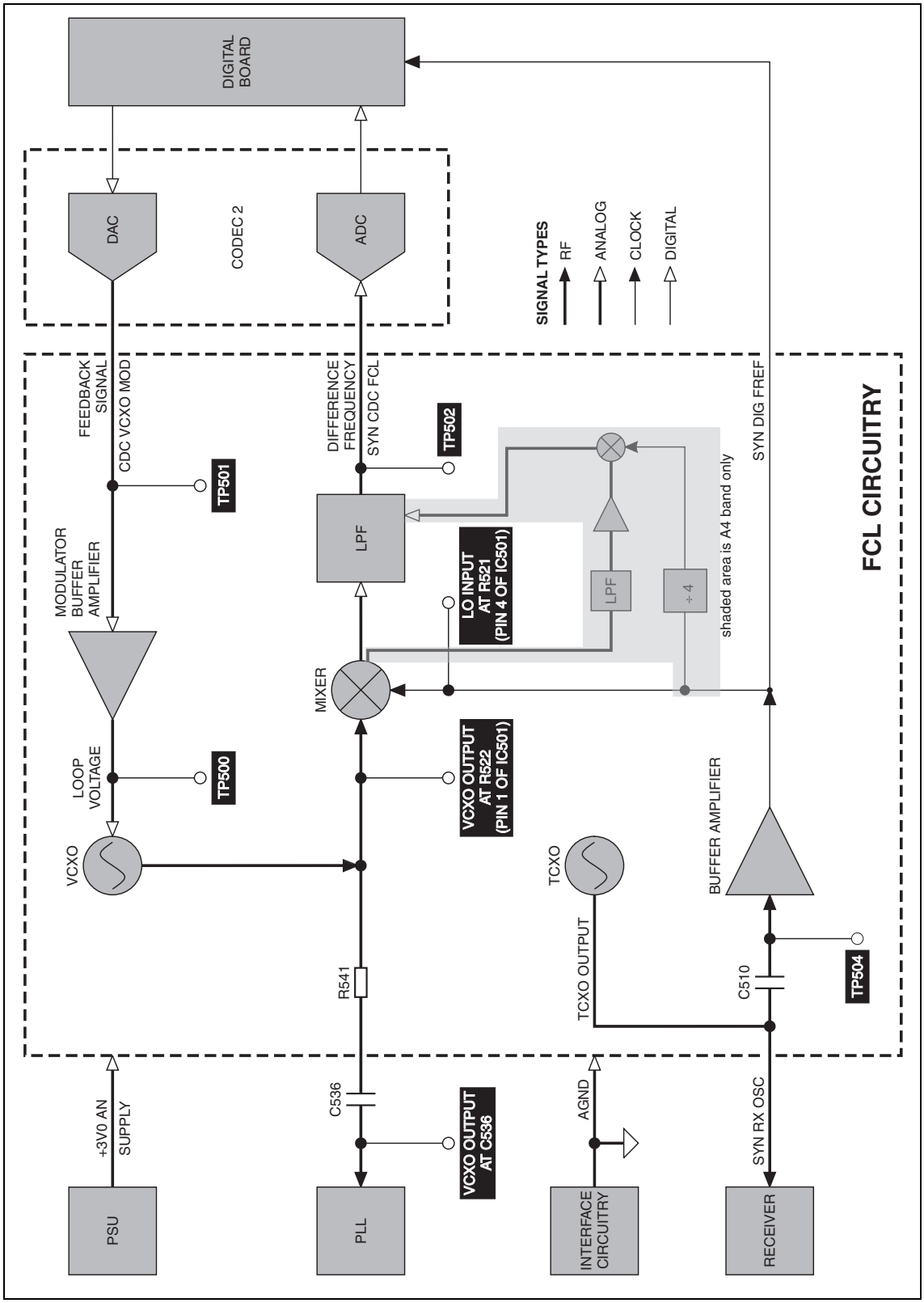

Task 34 — Power Supply

If the FCL is suspect, first check that the 3V power supply is not the cause of the fault.

1. If not already done, remove the board from the chassis and place the radio in CCTM.

2. Measure the supply +3V0 AN at the via shown in **Figure 9.17**. The via is adjacent to the CDC TOP can.

via adjacent to CDC TOP can: 3.0 ± 0.3V DC

3. If the voltage is correct, go to "VCXO and TCXO Outputs" on page 237. If it is not, the 3V regulator **IC603** is suspect; go to Task 3 of "Power Supply Fault Finding" on page 174.

Figure 9.17 TCXO circuitry under the CDC TOP can

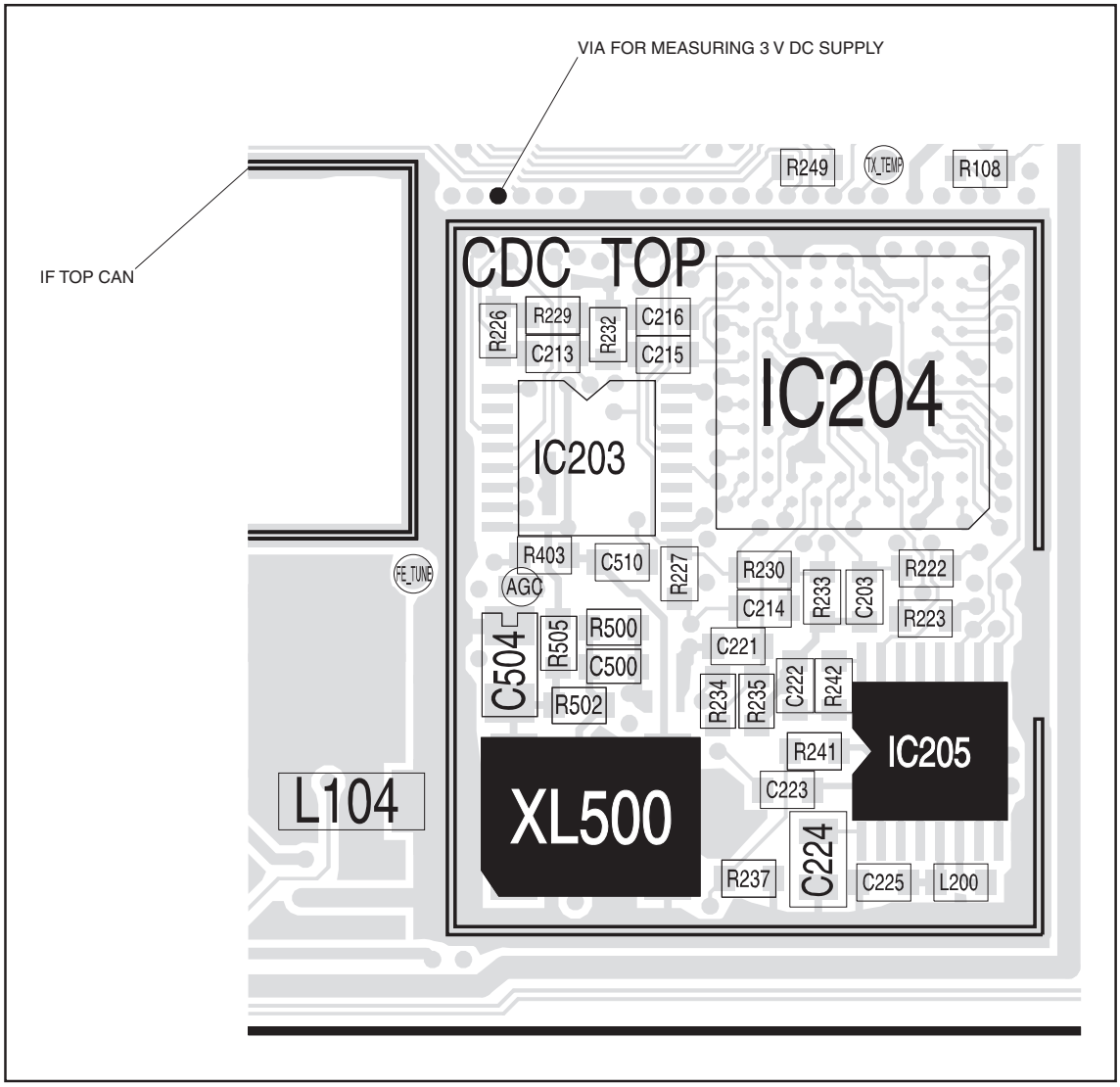

© Tait Electronics Limited November 2007

9.9 VCXO and TCXO Outputs

Task 35 — VCXO Output

If the 3 V power supply is not faulty, check the VCXO output as follows:

1. Use an oscilloscope probe to check the VCXO output at the following position:

   C536 — probe the via next to C536 (see **Figure 9.18**). The signal should be:

VCXO output at C536: sine wave of 1.1 ± 0.2 V_{pp} on 1.4 ± 0.2 V DC

   A4 band: **IC509, pin 4** — probe the via next to **R5044** (see **Figure 9.18**). The signal should be:

VCXO output at pin 4 of IC509: square wave of 1.5 ± 0.2 V_{pp}

2. If the signal is correct, go to Task 36. If it is not, go to Step 3.

3. The VCXO circuitry under the VCXO BOT can is faulty. Remove the VCXO BOT can.

4. Locate and repair the fault in the VCXO (**Q501**, **Q503**, **XL501** and associated components) (see **Figure 9.19**).

5. Confirm the removal of the fault and go to Task 36. If the repair failed, replace the board and go to "Final Tasks" on page 163.

© Tait Electronics Limited November 2007

Figure 9.18 FCL circuitry under and adjacent the FCL TOP can

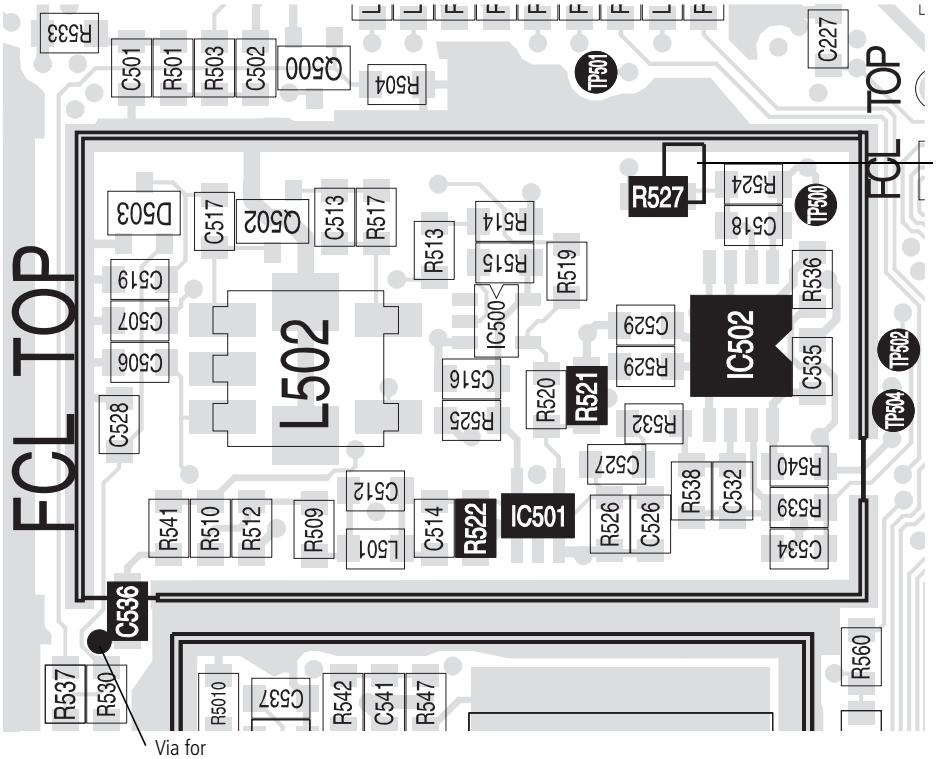

A4 band

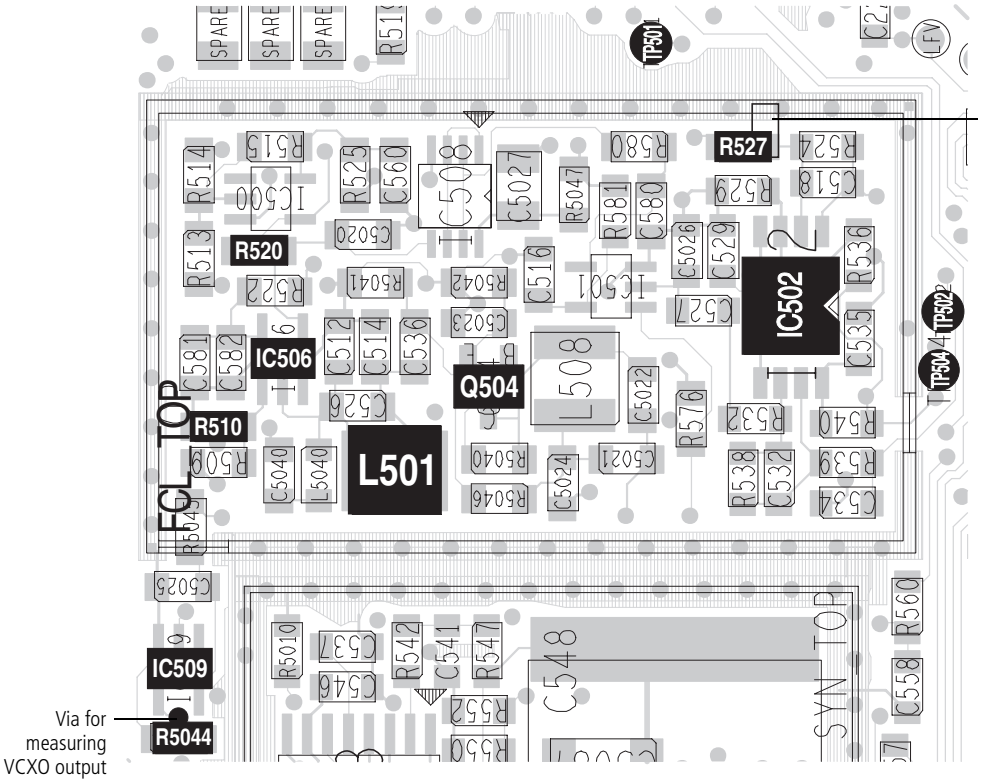

© Tait Electronics Limited November 2007

Task 36 — TCXO Output

If the VCXO output is correct, check the TCXO output as follows:

1. Use the oscilloscope probe to check the TCXO output at the **TP504 test point** (see **Figure 9.18**). The signal is SYN RX OSC and should be:

TCXO output at TP504 test point: clipped sine wave of 1.0 ± 0.2 V_{pp}

2. If the signal is correct, go to "Signals at TP501 and TP502" on page 240. If it is not, go to Step 3.

3. The TCXO circuitry under the CDC TOP can is faulty. Remove the CDC TOP can.

4. Locate and repair the fault in the TCXO (**XL500** and associated components) (see **Figure 9.17**).

5. Confirm the removal of the fault and go to "Signals at TP501 and TP502" on page 240. If the repair failed, replace the board and go to "Final Tasks" on page 163.

Figure 9.19 FCL circuitry under the VCXO BOT can

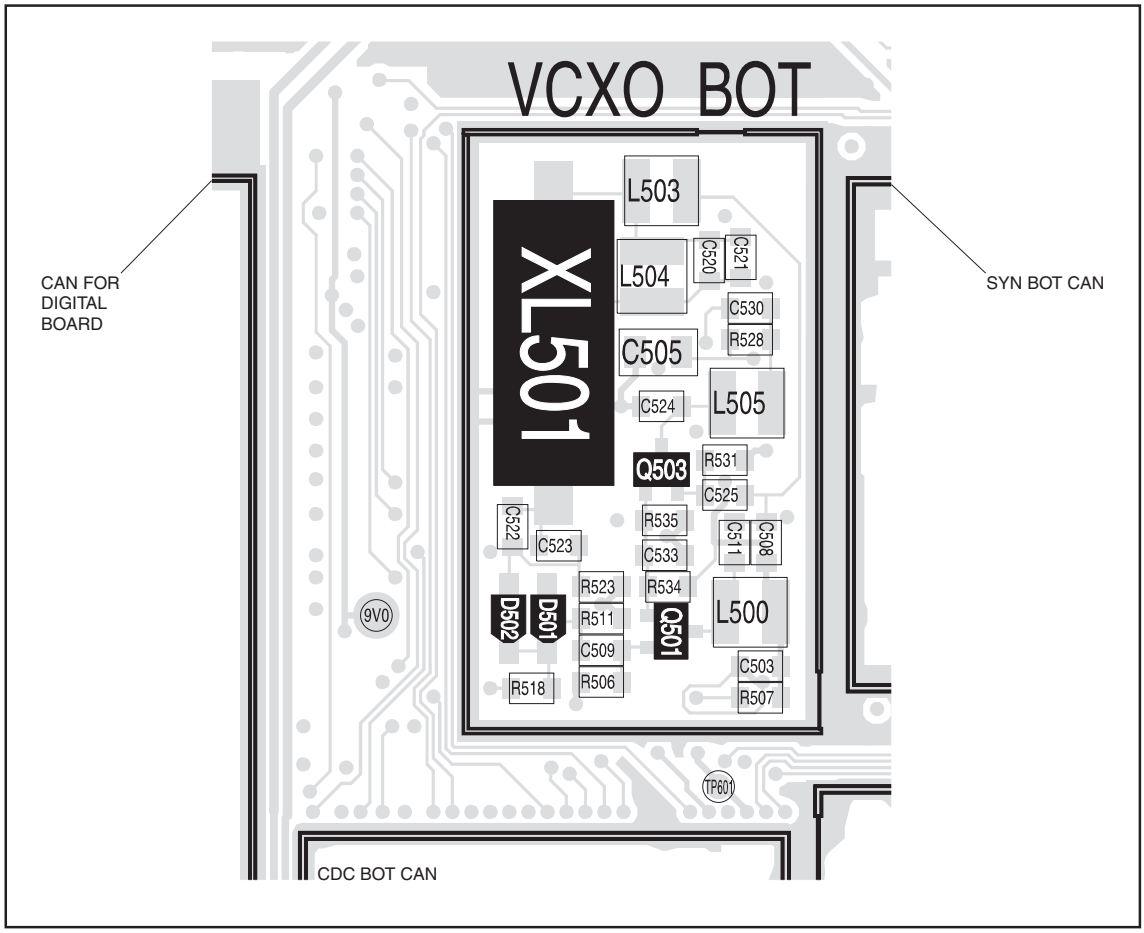

9.10 Signals at TP501 and TP502

Introduction

If the VCXO and TCXO outputs are correct, the next stage is to check the signals at the TP501 and TP502 test points. The procedure is divided into three tasks:

- Task 37: check signal at TP502
- Task 38: check signal at TP501 and ground TP501 if loop is oscillating
- Task 39: check signal at TP502 with TP501 grounded.

These checks will reveal any faults in the mixer and LPF circuitry, and any additional fault in the VCXO circuitry.

Task 37 — TP502 Test Point

Check the signal at the TP502 test point to determine if there is a fault in the mixer or LPF (low-pass filter) circuitry:

1. Use the oscilloscope probe to check the difference frequency at the **TP502 test point** (see **Figure 9.18**). The signal is SYN CDC FCL and should be:

TP502 test point: sine wave of 1.1 ± 0.2 V_{pp} on 1.5 ± 0.1 V DC

   A4 band: The signal should be:

TP502 test point: triangular wave of 1.5 ± 0.2 V_{pp} on 1.5 ± 0.1 V DC

2. If the signal is correct, go to Task 38. If it is not, go to Step 3.

3. The mixer or LPF circuitry under the FCL TOP can is faulty. Remove the FCL TOP can.

4. Locate the fault in the mixer (**IC501** and associated components) or LPF circuitry (**IC502** pins 5 to 7, and associated components) (see **Figure 9.18**).

   A4 band: Check the mixer (**IC501**, **IC506** and associated components) or LPF circuitry (**IC502** pins 5 to 7, and associated components) (see **Figure 9.18**). Also check **L501** and associated components and buffer **Q504**, **IC509** and associated components.

5. Repair the circuitry. Note that the TCXO input to the mixer (see **Figure 9.18**) should be:

   TCXO input at **R521** (pin 4 of **IC501**):

TCXO input: square wave with frequency of 13 MHz and amplitude of 3.0 ± 0.2 V_{pp}

   A4 band: TCXO input at **R520** (pin 4 of **IC506**):

TCXO input: square wave with frequency of 10.4 MHz and amplitude of 3.0 ± 0.2 V_{pp}

© Tait Electronics Limited November 2007

Also, the VCXO input to the mixer (see **Figure 9.18**), although noisy and difficult to measure, should be:

VCXO input at **R522** (pin 1 of **IC501**):

VCXO input: sine wave of 20 ± 10 mV_{pp}

A4 band: VCXO input at **R510** (pin 1 of **IC506**):

VCXO input: sine wave of 20 ± 10 mV_{pp}

6. Confirm the removal of the fault and go to Task 38. If the repair failed, replace the board and go to "Final Tasks" on page 163.

Task 38 — TP501 Test Point

If the signal at the TP502 test point is correct, check the signal at the TP501 test point:

1. With the oscilloscope probe at the **TP501 test point** (see **Figure 9.18**), check the DAC output CDC VCXO MOD. If a triangular wave is present, go to Step 2. Otherwise go to "VCXO and CODEC Circuitry" on page 244.

2. A fault is causing the loop to oscillate. If not already done, remove the FCL TOP can.

3. Check the waveform at the **TP500 test point** (see **Figure 9.18**). The waveform should be an amplified and inverted version of the waveform at the **TP501 test point**.

   A4 band: TP500 is not marked, but the waveform can be checked at the via adjacent to **C518**.

4. If the waveform is correct, go to Step 5. If it is not, there is a fault in the modulator buffer amplifier (**IC502** pins 1 to 3, and associated components) (see **Figure 9.18**). Rectify the fault and return to Step 1.

5. Connect the **TP501 test point** to ground by resoldering **R527** in the position shown in **Figure 9.18**. The VCXO loop voltage is forced high.

6. Use the oscilloscope probe to check the VCXO output at **C536** — probe the via next to C536 (see **Figure 9.18**). The signal should be:

VCXO output at C536:	sine wave with frequency of 13.017 MHz and amplitude of 1.1 ± 0.2V_{pp} on 1.4 ± 0.2V DC

7. If the signal is correct, go to Task 39. If it is not, go to Step 8.

8. The VCXO circuitry is faulty. If not already done, remove the VCXO BOT can.

9. Locate and repair the fault in the VCXO circuitry (**Q501**, **Q503**, **XL501** and associated components) (see **Figure 9.19**).

10. Confirm the removal of the fault, and go to Task 39. If the repair failed, replace the board and go to "Final Tasks" on page 163.

© Tait Electronics Limited November 2007

Task 39 — TP502 Test Point (TP501 Grounded)

If the loop was oscillating, Task 38 will have revealed any fault in the VCXO circuitry. If there was no fault, or if the circuit was repaired, a check at the TP502 test point is now required. This will show if there are any additional faults in the mixer or LPF circuitry.

1. Use the oscilloscope probe to check the difference frequency at the **TP502 test point** (see **Figure 9.18**). The signal is SYN CDC FCL and should be:

TP502 test point:	sine wave with frequency of at least 15 kHz and amplitude of 1.1 ± 0.2 V_{pp} on 1.5 ± 0.1 V DC

A4 band: the frequency should be:

TP502 test point:	triangular wave with frequency of at least 15 kHz and amplitude of 1.5 ± 0.2 V_{pp} on 1.5 ± 0.1 V DC

2. If the signal is correct, go to Step 6. If it is not, go to Step 3.

3. The mixer circuitry (**IC501** and associated components) or the LPF circuitry (**IC502** pins 5 to 7, and associated components) under the FCL TOP can is faulty (see **Figure 9.18**). Locate the fault.

4. Repair the circuitry. Note that the TCXO input to the mixer (see **Figure 9.18**) should be:

   TCXO input at **R521** (pin 4 of **IC501**):

TCXO input:	square wave with frequency of 13 MHz and amplitude of 3.0 ± 0.2 V_{pp}

   A4 band: TCXO input at **R520** (pin 4 of **IC506**):

TCXO input:	square wave with frequency of 10.4 MHz and amplitude of 3.0 ± 0.2 V_{pp}

   Also, the VCXO input to the mixer (see **Figure 9.18**), although noisy and difficult to measure, should be:

   VCXO input at **R522** (pin 1 of **IC501**):

VCXO input: sine wave of 20 ± 10 mV_{pp}

   A4 band: VCXO input at **R510** (pin 1 of **IC506**):

VCXO input: sine wave of 20 ± 10 mV_{pp}

5. Confirm the removal of the fault, and go to Step 6. If the repair failed, resolder **R527** in its original position as shown in **Figure 9.18**, replace the board and go to "Final Tasks" on page 163.

© Tait Electronics Limited November 2007

6. Resolder **R527** in its original position as shown in **Figure 9.18**.

7. Replace all cans.

8. Use the oscilloscope probe to check the difference frequency at the **TP502 test point** (see **Figure 9.18**). The signal is SYN CDC FCL and should be:

TP502 test point: sine wave of 1.1 ± 0.2 V_{pp} on 1.5 ± 0.1 V DC

9. If the signal is correct, the fault has been removed; go to "Final Tasks" on page 163. If the signal is not correct, the repair failed; replace the board and go to "Final Tasks" on page 163.

© Tait Electronics Limited November 2007

9.11 VCXO and CODEC Circuitry

Introduction

If the signals at the TP501 and TP502 test points are correct, two CCTM checks will reveal any remaining faults. These possible faults concern the VCXO tank circuit and the CODEC 2 circuitry. There are therefore three aspects, which are covered in Task 40 to Task 42:

- Task 40: CCTM checks
- Task 41: VCXO tank circuit
- Task 42: CODEC 2 circuitry.

Following any repairs of the VCXO or CODEC 2 circuitry, Task 40 will need to be repeated to confirm the removal of the fault.

Task 40 — CCTM Checks

If the signals at the TP501 and TP502 test points are correct, or any related faults were rectified, perform the following CCTM checks:

1. Enter the CCTM command *393 1 1900*. Measure the voltage level at the **TP501 test point** (see **Figure 9.18**):

TP501 test point: 1.3 ± 0.2 V DC (after CCTM 393 1 1900)

2. Enter the CCTM command *72* and note the lock status.

lock status=**xyz** (**x**=RF PLL; **y**=FCL; **z**=LO2) (0=not in lock; 1=in lock)

3. Enter the CCTM command *393 1 –1900*. Again measure the voltage level at the **TP501 test point**:

TP501 test point: 2.1 ± 0.2 V DC (after CCTM 393 1 –1900)

4. Enter the CCTM command *72* and note the lock status.

5. If the above voltage levels are not correct or if the FCL is out of lock in either or both of the above cases, investigate the VCXO tank circuit; go to Task 41.

   If the voltage level remains fixed at about 1.5 V DC, investigate the CODEC 2 circuitry; go to Task 42.

   If the voltage levels are all correct (following earlier repairs), the fault has been removed; go to "Final Tasks" on page 163.

Task 41 — VCXO Tank Circuit

If the CCTM checks indicate that the VCXO tank circuit is faulty, repair the circuit as follows:

1. If not already done, remove the VCXO BOT can.

2. Locate and repair the fault in the VCXO tank circuit (**Q501**, **D501**, **D502**, **XL501** and associated components) (see **Figure 9.19**).

3. Confirm the removal of the fault and go to Step 4. If the repair failed, replace the board and go to "Final Tasks" on page 163.

© Tait Electronics Limited November 2007

4. Replace all cans.

5. Repeat Task 40 to confirm the removal of the fault. If the repair failed, replace the board and go to "Final Tasks" on page 163.

Task 42 — CODEC 2 Circuitry

If the CCTM checks indicate a fault in the CODEC 2 circuitry or with the digital signals to and from the circuitry, rectify the fault as follows:

1. Most of the CODEC 2 circuitry is situated under the CDC TOP can. If not already done, remove the CDC TOP can.

2. Check the following digital signals at **IC205** (see **Figure 9.17**):
   - pin 10 : DIG CDC2 LRCK
   - pin 12 : DIG CDC2 SCLK
   - pin 8 : CDC2 DIG SDTO
   - pin 9 : DIG CDC2 SDTI.

   These signals to and from the digital board should all be active:

digital signals: 3.3 ± 0.3V

3. If the digital signals are correct, the CODEC 2 circuitry is suspect; go to Step 6. If they are not, go to Step 4.

4. If any or all digital signals are missing, check the connections between **IC205** and the digital board (see **Figure 9.17**).

5. If there are faults such as open circuits in the connections, repair the circuitry and repeat Task 40.

   If the connections are not faulty, then the digital board is faulty. Replace the board and go to "Final Tasks" on page 163.

6. The CODEC 2 circuitry comprises **IC205** and associated components under the CDC TOP can (see **Figure 9.17**) as well as **R246** under the CDC BOT can (see **Figure 7.3 on page 174**). Locate the fault.

7. Repair the circuitry. Note that, if the circuitry is functioning properly, probing the **TP501 test point** (see **Figure 9.18**) during power-up will show a five-step staircase signal followed by a random nine-step staircase signal — this is the expected power-up auto-calibration sequence.

8. Confirm the removal of the fault, and go to Step 9. If the repair failed, replace the board and go to "Final Tasks" on page 163.

9. Replace all cans.

10. Repeat Task 40 to confirm the removal of the fault. If the repair failed, replace the board and go to "Final Tasks" on page 163.

© Tait Electronics Limited November 2007

© Tait Electronics Limited November 2007

10 Receiver Fault Finding

Fault Conditions

This section covers the diagnosis of faults in the receiver. The fault-diagnosis procedures consist of 18 tasks grouped into the following sections.
The symptoms of the fault in the receiver circuitry determine which sections are relevant:

- Faulty Receiver Sensitivity
- Excessive Loss of Sensitivity
- Moderate or Slight Loss of Sensitivity
- Incorrect RSSI Readings
- Faulty Radio Mute
- High Receiver Distortion

If the receiver sensitivity is low, begin with "Faulty Receiver Sensitivity" on page 248 to determine the extent of the loss in sensitivity.

CCTM Commands

The CCTM commands required are listed in Table 10.1. Full details of the commands are given in "Computer-Controlled Test Mode (CCTM)" on page 123.

Table 10.1 CCTM commands required for the diagnosis of faults in the receiver

Command	Description
72	Read lock status of RF PLL, FCL and LO2 — displays **xyz** (0=not in lock, 1=in lock)
101 **x** **y** 0	Set transmit frequency (**x** in hertz) and receive frequency (**y** in hertz) to specified values
376	Read tuning voltage for front-end circuitry — displays voltage **x** in millivolts
378	Read signal power at output of channel filter — displays power **x** (square of amplitude

Frequency Bands

Where test procedures or figures differ according to the frequency band of the radio, the frequency band is given in brackets. The frequency band may be referred to as either 'VHF' (very high frequency) or 'UHF' (ultra high frequency) or identified by the frequency sub-band, such as 'B1' or 'H7'.

The product-code label on the radio body will identify the frequency band as described in "Product Codes" on page 17. A definition of frequency bands is given in "Defining Frequency Bands" on page 131.

© Tait Electronics Limited November 2007

10.1 Faulty Receiver Sensitivity

Introduction

This section covers the determination of the extent of the receiver's loss of sensitivity. Depending on the nature of the fault, a reduction in receiver sensitivity of 1 dB is often due to a reduction in receiver gain of many decibels. It is therefore easier to measure gain loss rather than sensitivity loss. Consequently, if the receiver sensitivity is too low, first check the receiver gain. The procedure is given in Task 1 below.

Task 1 — Determine Extent of Sensitivity Loss

Determine the receiver gain as follows. The corresponding loss of sensitivity can then be deduced. Depending on the extent of the loss, continue with "Excessive Loss of Sensitivity" on page 250 or "Moderate or Slight Loss of Sensitivity" on page 255 to rectify the fault.

1. Input an RF signal (not necessarily modulated) of –90 dBm (or –84 dBm with a trigger-base radio) at the RF connector.

2. Enter the CCTM command *378* to measure the receiver output level.

3. Note the value ***x*** returned for the receiver output level. Depending on the frequency band in which the radio operates, the value should be:

receiver output level ***x***: normally between 500 000 and 6000 000

   Note that a change in the input level of 10 dBm should result in a ten-fold change in ***x***.

4. If necessary, measure the RF voltage at the **QN test point** (see **Figure 10.1**). (There is access through a hole in the IF TOP can.) For comparison, the voltages corresponding to the above values of ***x*** are:

x = 500 000: 12 mV_{pp} ***x*** = 6000 000: 120 mV_{pp}

   With an unmodulated RF signal the frequency should be 64.000 kHz, provided that the LO1, FCL and LO2 are locked and on the correct frequency.

5. Given the value of ***x***, go to the relevant section as follows:
   - ***x*** < 1500, go to "Excessive Loss of Sensitivity" on page 250 (sensitivity is very low)
   - ***x*** < 500 000, go to "Moderate or Slight Loss of Sensitivity" on page 255 (sensitivity is low)

© Tait Electronics Limited November 2007

Figure 10.1 Receiver circuitry under the IF TOP can (top side)

10.2 Excessive Loss of Sensitivity

Introduction

This section covers the case where the receiver has suffered an excessive loss of sensitivity. As measured in Task 1, the receiver gain will be less than 1500, which implies a sensitivity that is more than 40dBm too low. The fault-diagnosis procedure for this case consists of five tasks:

- Task 2: check power supplies
- Task 3: check logic signal
- Task 4: check lock status
- Task 5: check biasing of IF amplifier
- Task 6: check matching circuitry

If the fault does not lie with the power supplies, it is probably in the control, LO, IF1 or IF2 circuitry.

Task 2 — Check Power Supplies

First check the two power supplies 3V0 AN and 3V0 RX for the receiver circuitry.

1. Remove the board from the chassis.
2. Check for 3.0V DC (3V0 AN) at the **TP601 test point** near the LO2 BOT can (see **Figure 10.2**).

TP601 test point: 3.0V DC

3. If the voltage is correct, go to Step 4. If it is not, the 3V regulator **IC603** is suspect; go to Task 3 of "Power Supply Fault Finding" on page 174.
4. Remove the LO2 BOT can.
5. Check for 3.0V DC (3V0 RX) around the collector feed to **Q402** or **Q403** of LO2 (see **Figure 10.2**).

Q402 or Q403 collector: 3.0V DC

   Alternative measurement points are:

   - K5 band: the collector feed to **IC404** or **IC405** of the RF LNA under the FE TOP can (see **Figure 10.4**)
   - All other bands: the collector feed to **Q401** of the RF LNA under the FE TOP can (see **Figure 10.3**)
   - All bands: **Q404** of the IF amplifier under the IF TOP can (see **Figure 10.1**).

6. If the voltage is correct, go to Task 3. If it is not, the 3V RX switch (based on **Q604** and **Q605**) in the PSU module is suspect; go to Task 3 of "Power Supply Fault Finding" on page 174.

© Tait Electronics Limited November 2007

Figure 10.2 Receiver circuitry under the LO2 BOT can (UHF shown)

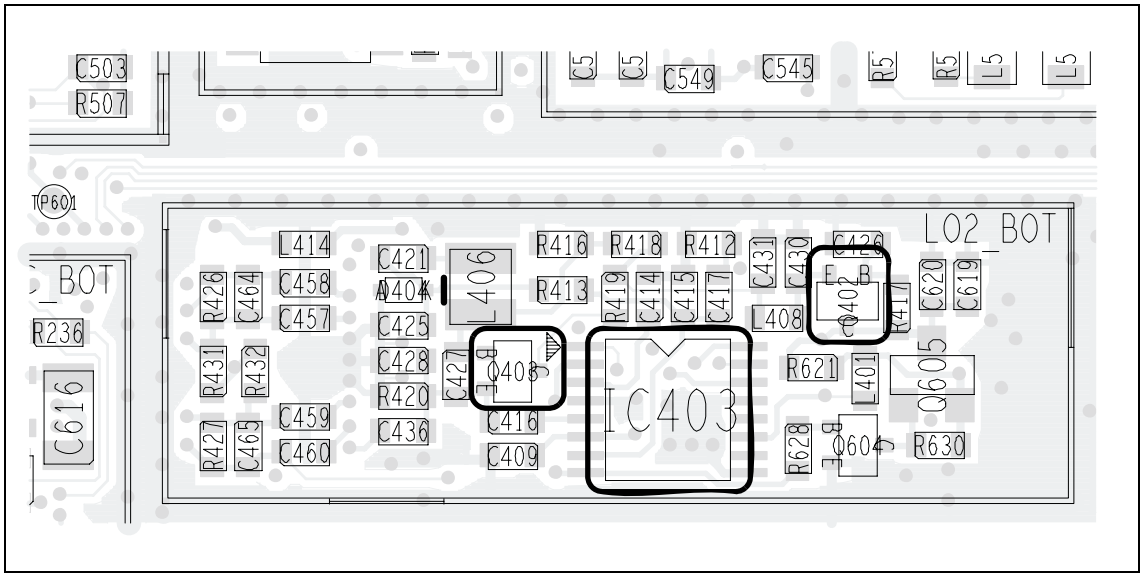

Figure 10.3 Receiver circuitry under the FE TOP can (top side) (all bands except K5)

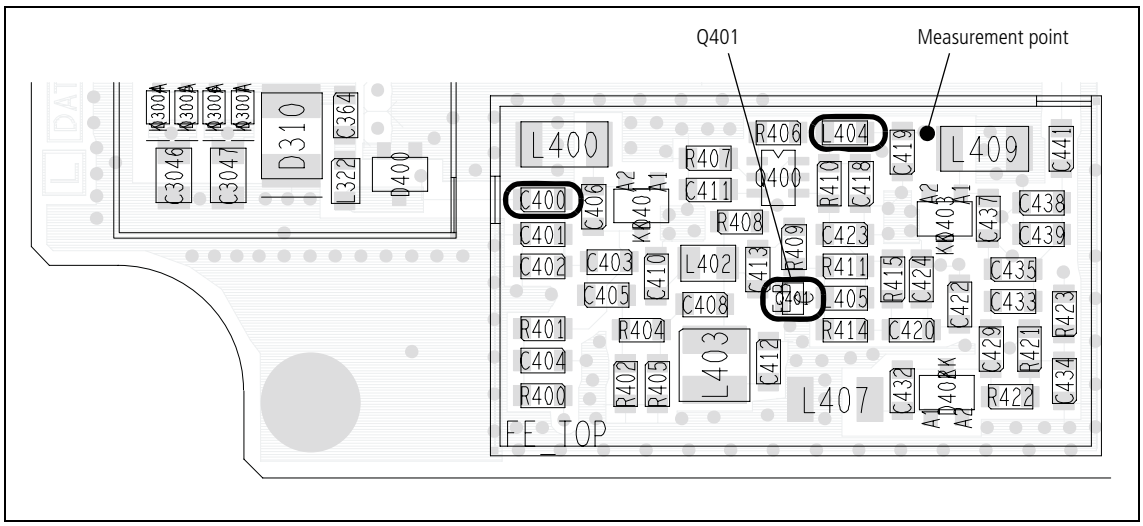

Figure 10.4 Receiver circuitry under the FE TOP and IF TOP can (K5 band only)

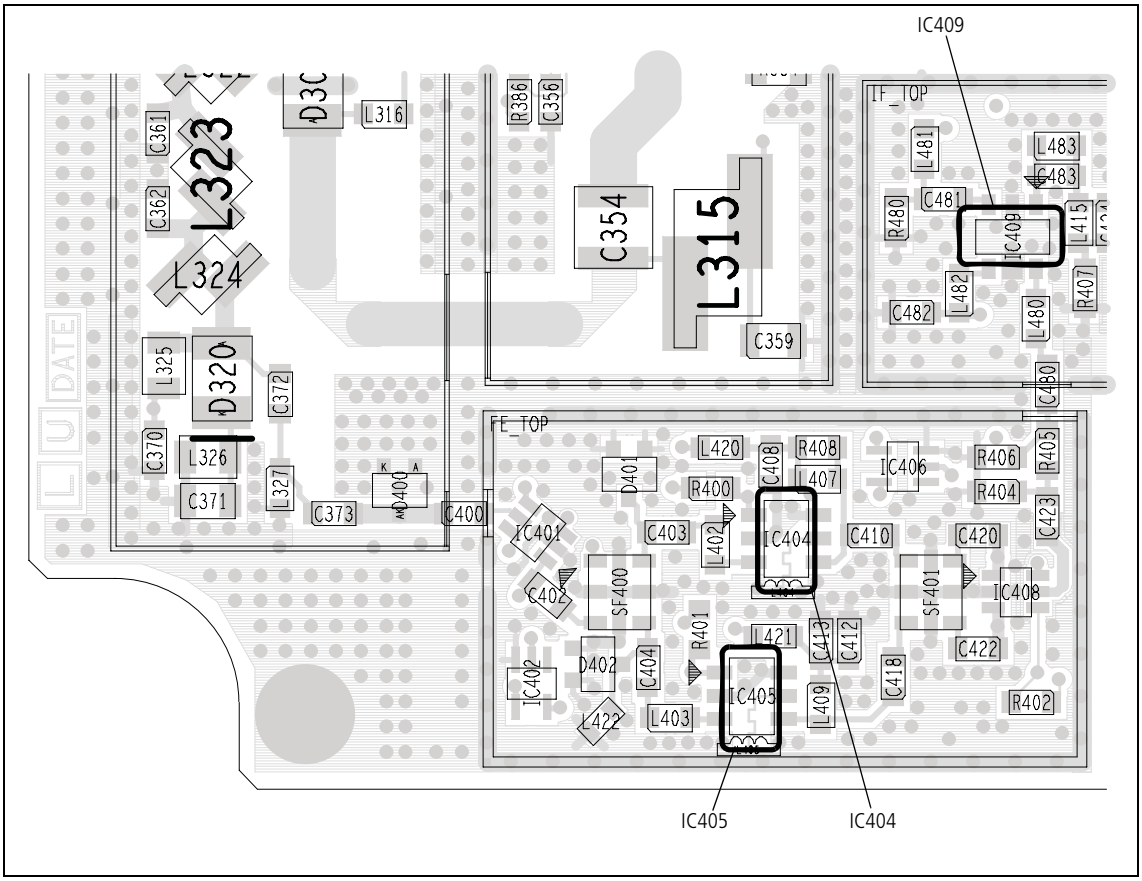

Task 3 — Check Logic Signal

If there is no fault with the power supplies, check the logic signal DIG RX EN that is input from the digital board.

1. Check the logic signal DIG RX EN at pin 8 of **IC403** (see **Figure 10.2**). The signal is active high. The required status is active.

pin 8 of IC403: about 3.0V (active)

   An alternative measurement point to the above is pin 24 of **IC400** under the IF TOP can (see **Figure 10.1**).

2. If DIG RX EN is active, go to Task 4. If it is not, go to Step 3.

3. Check the signal continuity from the digital board to the receiver. Repair any fault and go to Step 4. If the digital board itself appears to be faulty, replace the board and go to "Final Tasks" on page 163.

4. Recalibrate the receiver using the calibration application.

5. Confirm the removal of the fault and go to "Final Tasks" on page 163. If the repair failed, go to Task 7.

© Tait Electronics Limited November 2007

Task 4 — Check Lock Status

If the logic signal from the digital board is active, as required, check the lock status of the radio.

1. Enter the CCTM command *72* to determine the lock status. The status should be normal:

lock status: 111 (LO1, FCL, LO2 all in lock)

2. If the lock status is normal, go to Task 5. If the LO1 is not in lock, go to "Frequency Synthesizer Fault Finding" on page 185. If the FCL is not in lock, go to "Power Supply for FCL" on page 234. If the LO2 is not in lock, go to Step 3.

3. Check the components around **IC403**, **Q402** and **Q403** (see **Figure 10.2**). Repair any fault.

4. Recalibrate the receiver using the calibration application.

5. Confirm the removal of the fault, and go to "Final Tasks" on page 163. If the repair failed go to Task 7.

Task 5 — Check Biasing of IF Amplifier

If the lock status is normal, check the biasing of the IF amplifier.

1. Remove the IF TOP can.

2. Check all components around **Q404** of the IF amplifier (see **Figure 10.1**).

3. Check the 3V supply voltage at **L419**; use the measurement point shown in **Figure 10.1**.

4. Also check the amplifier bias conditions. First measure V_c between the collector of **Q404** and ground (see **Figure 10.1**).

V_C: 2.0 ± 0.2V

5. Secondly, check I_c. To do so, unsolder and raise one terminal of **L419** (tombstone position) (see **Figure 10.1**), connect a multimeter between this terminal and the pad for the terminal, and measure the current.

I_C: 1.8 ± 0.5mA

6. If the checks in Step 2 to Step 5 reveal no fault, go to Task 6. If there is a fault, repair it and go to Step 7.

7. Recalibrate the receiver using the calibration application.

8. Confirm the removal of the fault, and go to "Final Tasks" on page 163. If the repair failed go to Task 7.

© Tait Electronics Limited November 2007

Task 6 — Check Matching Circuitry

Having excluded the IF amplifier, check the matching circuitry for the crystal filters.

1. Check all remaining components between **T401** and **IC400** — these form the matching circuitry for the crystal filters **XF400** and **XF401** (see **Figure 10.1**).

2. If the above check reveals no fault, go to Step 3. If there is a fault, repair it and go to Step 6.

3. Remove the PIN TOP and LPF TOP cans.

4. Make a visual check of the components in the receive path of the PIN switch and LPF circuits.

5. If the visual check reveals an obvious fault, repair it and go to Step 6. If there is no obvious fault, go to Task 7.

6. Recalibrate the receiver using the calibration application.

7. Confirm the removal of the fault, and go to "Final Tasks" on page 163. If the repair failed go to Task 7.

© Tait Electronics Limited November 2007

10.3 Moderate or Slight Loss of Sensitivity

Introduction

This section covers the case where the receiver has suffered a moderate or slight loss of sensitivity. As measured in Task 1, the receiver gain will be less than 500 000, but not as low as 1500. With a gain less than 40 000, the loss of sensitivity will be moderate — about 15 dBm too low; otherwise it will be slight — just a few decibels too low. There are three tasks:

- Task 7: front-end calibration and tuning voltages (all bands except K5)
- Task 8: moderately low receiver sensitivity
- Task 9: slightly low receiver sensitivity

The fault-diagnosis procedures of Task 8 and Task 9 are similar; although the differences are minor they are important.

Task 7 — Front-end Calibration and Tuning Voltages (all bands except K5)

If the loss of sensitivity is moderate or slight, the fault is probably in the front-end tuning circuitry. This task is for all bands except K5. For the K5 band, go to Task 8 on page 256.

1. Using the calibration application, check the calibration of the front-end tuning circuitry: Open the *"Raw Data"* page and click the *"Receiver"* tab.

2. Record the values listed in the *"Rx FE Tune BPF Settings"* field — these are the DAC values of the FE (front-end) tuning voltages for the five frequencies *FE TUNE0* to *FE TUNE4*.

   (*FE TUNE0* is the lowest frequency and *FE TUNE4* the highest frequency in the radio's frequency band; the values are given in **Table 10.2**.)

3. For each of the frequencies *FE TUNE0* to *FE TUNE4* in turn, carry out the following procedure: Enter the CCTM command *101* ***a a*** *0*, where ***a*** is the frequency in hertz.

   Enter the CCTM command *376* and record the value returned — this is the in millivolts.

4. Compare the values measured in Step 2 and Step 3 with the nominal DAC and voltage values listed in **Table 10.2**.

5. If the DAC and voltage values are correct, go to Step 8. If they are not, go to Step 6.

6. Recalibrate the receiver using the calibration application, and check the DAC and voltage values again.

7. If the DAC and voltage values are now correct, the fault has been rectified; go to "Final Tasks" on page 163. If they are not, go to Step 8.

8. Go to Task 8 if the receiver output level ***x*** measured in Task 1 was less than 40 000; otherwise go to Task 9.

© Tait Electronics Limited November 2007

Task 8 — Moderately Low Sensitivity

For all bands except K5, following the initial investigation in Task 7, check the circuitry as follows when the sensitivity loss is moderate. For the K5 band, these steps start on page 257.

All bands except K5:

1. Remove the FE TOP can and, if not already done, the IF TOP can.

2. Check the soldering of all the components of the front-end tuning circuitry from **C400** to **T401** (see **Figure 10.1** and **Figure 10.3**).

3. Check the 3V supply voltage at **L404**; use the measurement point shown in **Figure 10.3**.

4. Also check the LNA bias conditions. First measure V_c between the collector of **Q401** and ground (see **Figure 10.3**).

V_c: 2.7 ± 0.1V

5. Secondly, check I_c. To do so, unsolder and raise one terminal of **L404** (tombstone position) (see **Figure 10.3**), connect a multimeter between this terminal and the pad for the terminal, and measure the current.

I_c: 10 ± 1mA

6. If the checks in Step 2 to Step 5 reveal no fault, go to Step 7. If there is a fault, repair it and go to Step 8.

7. Check the signal level at the output of LO1 and continue the fault diagnosis as in "Power Supply for FCL" on page 234.

8. Recalibrate the receiver using the calibration application.

9. Confirm the removal of the fault and go to "Final Tasks" on page 163. If the repair failed, go to Task 9.

© Tait Electronics Limited November 2007

Table 10.2 Front-end tuning voltages and corresponding DAC values

Frequency band	Tuning voltages at five different frequencies				
	FE TUNE0	*FE TUNE1*	*FE TUNE2*	*FE TUNE3*	*FE TUNE4*
A4 band Frequency (MHz) DAC value Voltage (V)	65.9 0 to 40 0 to 0.47	72.1 89 ± 15 1.05 ± 0.18	77.1 134 ± 15 1.58 ± 0.18	82.1 173 ± 15 2.04 ± 0.18	88.1 218 ± 15 2.56 ± 0.18
B1 band Frequency (MHz) DAC value Voltage (V)	135.9 37 ± 20 0.44 ± 0.24	145.1 88 ± 15 1.04 ± 0.18	155.1 136 ± 15 1.60 ± 0.18	164.1 174 ± 15 2.04 ± 0.18	174.1 210 ± 15 2.57 ± 0.18
C0 band Frequency (MHz) DAC value Voltage (V)	173.9 41 ± 20 0.48 ± 0.24	187.1 104 ± 15 1.22 ± 0.18	200.1 149 ± 15 1.75 ± 0.18	213.1 187 ± 15 2.20 ± 0.18	225.1 220 ± 15 2.59 ± 0.18
D1 band Frequency (MHz) DAC value Voltage (V)	215.9 42 ± 20 0.5 ± 0.2	228.1 103 ± 15 1.2 ± 0.18	241.1 151 ± 15 1.7 ± 0.18	253.1 187 ± 15 2.2 ± 0.18	266.1 224 ± 10 2.6 ± 0.12
H5 band Frequency (MHz) DAC value Voltage (V)	399.9 0 to 36 0 to 0.43	417.1 94 ± 15 1.11 ± 0.18	435.1 106 ± 15 1.25 ± 0.18	452.1 156 ± 15 1.84 ± 0.18	470.1 191 ± 15 2.25 ± 0.18
H6 band Frequency (MHz) DAC value Voltage (V)	449.9 41 ± 20 0.48 ± 0.24	470.1 91 ± 15 1.07 ± 0.18	490.1 134 ± 15 1.58 ± 0.18	510.1 176 ± 15 2.07 ± 0.18	530.1 210 ± 15 2.47 ± 0.18

K5 band only:

For the K band, check the circuitry as follows when the sensitivity loss is moderate. For all other bands, the steps begin on page 256.

1. Remove the FE TOP can and, if not already done, the IF TOP can.

2. Check the soldering of all the components of the front-end circuitry from **C400** to **IC409** (see **Figure 10.1** and **Figure 10.4**).

3. Check the 3 V supply voltage at **L420** and **L421**; use the measurement points shown in **Figure 10.1**.

4. Also check the LNA enable conditions. First measure V_c on pin 1 of the collector of **IC404** or **IC405** and ground (see **Figure 10.1**).

   IC404 is enabled for channels between 850 to 970 MHz, and **IC405** is enabled for channels between 762 and 776 MHz.

V_c: 2.9±0.1 V

5. If the checks in Step 2 to Step 4 reveal no fault, go to Step 6.
   If there is a fault, repair it and go to Step 7.

© Tait Electronics Limited November 2007

6. Check the signal level at the output of LO1 and continue the fault diagnosis as in "Power Supply for FCL" on page 234.

7. Confirm the removal of the fault and go to "Final Tasks" on page 163 on page 136. If the repair failed, go to Task 9.

Table 10.3 Front-end tuning voltages and corresponding DAC values (K5 band)

Frequency band	Tuning voltages at five different frequencies				
	FE TUNE0	*FE TUNE1*	*FE TUNE2*	*FE TUNE3*	*FE TUNE4*
K5 band Frequency (MHz) DAC value Voltage (V)	 761.9 0 0	 776.1 0 0	 849.9 255 3.0	 860.1 255 3.0	 870.1 255 3.0

Task 9 — Slightly Low Sensitivity

Following the initial investigation in Task 7, check the circuitry as follows when the sensitivity loss is slight.

1. Remove the FE TOP can and, if not already done, the IF TOP can.

2. Check the soldering of all the components of the front-end tuning circuitry from **C400** to **T401** (see **Figure 10.1** and **Figure 10.3**).

3. Check the IF-amplifier bias conditions as in Step 4 and Step 5 of Task 5.

4. Check the LNA bias conditions as in Step 4 and Step 5 of Task 8.

5. If the checks of Step 2 to Step 4 reveal no fault, go to Step 6. If there is a fault, repair it and go to Step 7.

6. Check the PIN switch and LPF as in Task 31 to Task 33 of "Transmitter Fault Finding (>25 W)" on page 267 or "Transmitter Fault Finding (25 W)" on page 341.

7. Recalibrate the receiver using the calibration application.

8. Confirm the removal of the fault and go to "Final Tasks" on page 163. If the repair failed, replace the board and go to "Final Tasks" on page 163.

© Tait Electronics Limited November 2007

10.4 Incorrect RSSI Readings

Introduction

If the RSSI readings are incorrect, the receiver calibration is suspect. There are four tasks, which cover the four types of settings concerned:

- Task 10: AGC voltage calibration
- Task 11: FE tune BPF settings
- Task 12: RSSI delta gain
- Task 13: AGC delta gain

If the receiver is properly calibrated but the fault persists, then the receiver sensitivity is suspect.

Task 10 — AGC Voltage Calibration

The first settings to check concern the AGC voltage calibration.

1. In the calibration application open the *"Raw Data"* page and click the *"Receiver"* tab.
2. Note the settings listed in the *"AGC Voltage Cal Pts"* field. The nominal settings should be as listed in **Table 10.4**. The AGC values depend on which demod IC is fitted (IC400). The IC is either an RF9667 or an RF2667.
3. If the settings are correct, go to Task 11. If they are not, go to Step 4.
4. Recalibrate the receiver and check the settings again.
5. If the settings are now correct, go to Step 6. If they are not, go to Task 1 and check the receiver sensitivity.
6. Check if the RSSI fault has been removed. If it has, go to "Final Tasks" on page 163. If it has not, go to Task 11.

© Tait Electronics Limited November 2007

Table 10.4 Nominal AGC data

Parameter	AGC voltage (mV)	
	A4 band: **RF2667**	**RF9667**
AGC0 *AGC1* *AGC2*	1810 ± 40 1985 ± 40 2135 ± 50	1710 ± 40 1845 ± 40 1965 ± 50
	B1 band: **RF2667**	**RF9667**
AGC0 *AGC1* *AGC2*	1790 ± 40 1960 ± 40 2110 ± 50	1750 ± 40 1900 ± 40 2040 ± 50
	C0 band: **RF2667**	**RF9667**
AGC0 *AGC1* *AGC2*	Not used	1700 ± 40 1840 ± 40 1960 ± 50
	D1 band: **RF2667**	**RF9667**
AGC0 *AGC1* *AGC2*	1855 ± 40 2050 ± 40 2220 ± 50	1750 ± 40 1900 ± 40 2050 ± 50
	G2 band: **RF2667**	**RF9667**
AGC0 *AGC1* *AGC2*	1845 ± 40 2020 ± 40 2159 ± 50	Not used
	H5 band: **RF2667**	**RF9667**
AGC0 *AGC1* *AGC2*	1860 ± 40 2040 ± 40 2200 ± 50	1725 ± 40 1865 ± 40 2000 ± 50
	H6 band: **RF2667**	**RF9667**
AGC0 *AGC1* *AGC2*	1870 ± 40 2050 ± 40 2220 ± 50	1825 ± 40 1970 ± 40 2150 ± 50
	K5 band: **RF2667**	**RF9667**
AGC0 *AGC1* *AGC2*	Not used	1775 ± 40 1925 ± 40 2070 ± 50
	Receiver input power (dBm)	
	Standard radio	**Trigger-base radio**
AGC0 *AGC1* *AGC2*	−50 −60 −68	−44 −54 −62

© Tait Electronics Limited November 2007

Task 11 — FE Tune BPF Settings

If the AGC voltage calibration is correct, check the FE tune BPF settings.

1. Note the settings listed in the *"FE Tune BPF Settings"* field. The nominal settings should be as listed in **Table 10.2**.
2. If the settings are correct, go to Task 12. If they are not, go to Step 3.
3. Recalibrate the receiver and check the settings again.
4. If the settings are now correct, go to Step 5. If they are not, go to Task 1 of "Faulty Receiver Sensitivity" on page 248 and check the receiver sensitivity.
5. Check if the RSSI fault has been removed. If it has, go to "Final Tasks" on page 163. If it has not, go to Task 12.

Task 12 — RSSI Delta Gain

If the FE tune BPF settings are also correct, check the RSSI delta gain values.

1. Note the values listed in the *"Rx Delta Gain Values"* field. The values should be between 0 dBm and about –3 dBm.
2. If the values are as expected, go to Task 13. If they are not, go to Step 3.
3. Recalibrate the receiver and check the values again.
4. If the values are now correct, go to Step 5. If they are not, go to Task 1 and check the receiver sensitivity.
5. Check if the RSSI fault has been removed. If it has, go to "Final Tasks" on page 163. If it has not, go to Task 13.

Task 13 — AGC Delta Gain

If the RSSI delta gain values are also correct, check the AGC delta gain values.

1. Note the values listed in the *"AGC Delta Gain Values"* field. The values should run gradually from 0 dBm to about 35 dBm.
2. If the values are as expected, go to Step 6. If they are not, go to Step 3.
3. Recalibrate the receiver and check the values again.
4. If the values are now correct, go to Step 5. If they are not, go to Task 1 and check the receiver sensitivity.
5. Check if the RSSI fault has been removed. If it has, go to "Final Tasks" on page 163. If it has not, go to Step 6.
6. In this case all the RSSI calibration settings are correct, but there is still an RSSI fault. Go to Task 1 and check the receiver sensitivity.

© Tait Electronics Limited November 2007

10.5 Faulty Radio Mute

Introduction

If the radio mute is faulty, the calibration settings are suspect. There are three tasks:

- Task 14: determine type of muting selected
- Task 15: noise muting selected
- Task 16: RSSI muting selected

The programming application is required for Task 14, and the calibration application for Task 15 and Task 16.

Task 14 — Determine Type of Muting Selected

First use the programming application to determine the type of muting selected.

1. In the programming application click the *"Basic Settings"* page under the *"Networks"* heading.
2. Click the *"Basic Network Settings"* tab.
3. Check the setting in the *"Squelch Detect Type"* field. Ensure that the setting is what the Customer expects.
4. If the setting is *"Noise Level"*, implying that noise muting is selected, go to Task 15. If the setting is *"Signal Strength"*, implying that RSSI muting is selected, go to Task 16.

© Tait Electronics Limited November 2007

Task 15 — Noise Muting Selected

With noise muting selected, check the noise mute settings:

1. In the calibration application open the *"Deviation/Squelch"* page and click the *"Squelch and Signaling Thresholds"* tab.

2. Ensure that, under the *"Squelch Thresholds"* label, the settings in the *"Country"*, *"City"* and *"Hard"* fields are what the Customer expects.

3. Open the *"Raw Data"* page and click the *"Mute"* tab.

4. Compare the values in the *"Mute Noise Readings"* field with the required minimum and maximum values listed in **Table 10.5**.

5. If the mute noise readings are correct, go to Task 1 and check the receiver sensitivity. If they are not, go to Step 6.

6. Recalibrate the mute and then check if the mute fault has been removed.

7. If the fault has been removed, go to "Final Tasks" on page 163. If it has not, go to Task 1 and check the receiver sensitivity.

Table 10.5 Mute data

Channel spacing	SINAD (dB)	Mute noise readings (K5 band)		Mute noise readings (all other bands)	
		Minimum	Maximum	Minimum	Maximum
Narrow (12.5 kHz)	8	1700	2000	1900	2300
	20	200	450	250	500
Medium (20 kHz)	8	1400	2100	3700	4200
	20	150	850	1000	1500
Wide (25 kHz)	8	3500	5600	5000	7300
	20	1100	3100	2200	3700

© Tait Electronics Limited November 2007

Task 16 — RSSI Muting Selected

With RSSI muting selected, check the RSSI mute settings.

1. In the calibration application open the *"Deviation/Squelch"* page and click the *"Squelch and Signaling Thresholds"* tab.

2. Check that the values in the *"Opening Pt"* fields and the *"Hysteresis"* fields under the *"Squelch Thresholds"* label are what the Customer expects.

3. If the calibration values are as expected, go to Task 10 and check the RSSI calibration. If they are not, go to Step 4.

4. Adjust the values in the *"Opening Pt"* and *"Hysteresis"* fields. Program the radio with the new values.

5. Check if the mute fault has been removed. If it has, go to "Final Tasks" on page 163. If it has not, go to Task 10 and check the RSSI calibration.

Figure 10.5 TCXO circuitry under the CDC TOP can (top side)

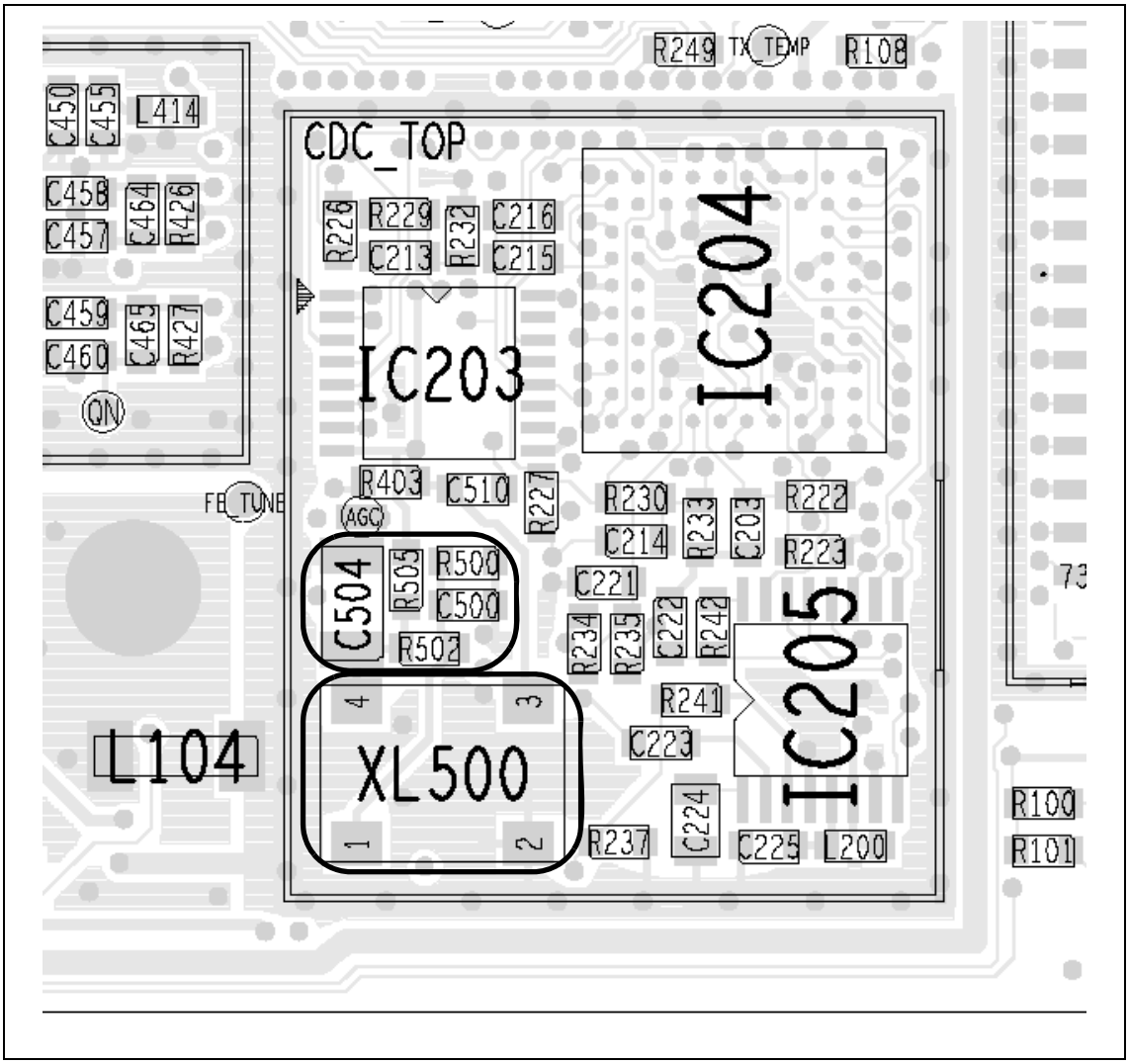

© Tait Electronics Limited November 2007

10.6 High Receiver Distortion

Introduction

If there is high receiver distortion, the TCXO is suspect, or alternatively, the matching circuitry for the crystal filters XF400 and XF401. There are two tasks:

- Task 17: TCXO calibration and repair of TCXO
- Task 18: second IF and repair of matching circuitry

Recalibrating the TCXO might often be sufficient to rectify the fault.

Task 17 — TCXO Calibration and Repair of TCXO

First check the TCXO calibration and, if necessary, repair the TCXO.

1. Use the calibration application to check the TCXO calibration: Open the *"Raw Data"* page and click the *"Volt Ref/TCXO/VCO/VCXO"* tab.

2. Note the values listed in the *"Tx TCXO"* and *"Rx TCXO"* fields of the *"TCXO"* group box. The values should be:

Tx TCXO and Rx TCXO values: between +20 Hz and –20 Hz

3. If the calibration values are correct, go to Step 4. If they are not, recalibrate the TCXO and go to Step 8.

4. Remove the CDC TOP can.

5. Check the components of the TCXO, which is based on **XL500** (see **Figure 10.5**). Repair any fault.

6. Recalibrate the TCXO and check the TCXO calibration values again as in Step 1 and Step 2.

7. If the calibration values are now correct, go to Step 8. If they are not, go to Task 18.

8. Check if the distortion fault has been removed. If it has, go to "Final Tasks" on page 163. If it has not, go to Task 18.

© Tait Electronics Limited November 2007

Task 18 — Second IF and Repair of Matching Circuitry

If the TCXO is not faulty, check the second IF and, if necessary, repair the matching circuitry.

1. Input a large unmodulated RF input signal exceeding –90 dBm at the RF connector.

2. Use a needle probe to measure the frequency of the signal at the **QN test point** — access is through the hole in the IF TOP can (see **Figure 10.1**). The frequency is the second IF and should be:

frequency at QN test point: 64.000 kHz

3. If the second IF is correct, go to Step 6. If it is not, go to Step 4.

4. Recalibrate the TCXO.

5. Check if the distortion fault has been removed. If it has, go to "Final Tasks" on page 163. If it has not, go to Step 6.

6. Remove the IF TOP can.

7. Check the components between **T401** and **IC400** — these form the matching circuitry for the crystal filters **XF400** and **XF401** (see **Figure 10.1**).

8. Repair any fault, confirm the removal of the fault, and go to "Final Tasks" on page 163. If the repair failed or no fault could be found, replace the board and go to "Final Tasks" on page 163.

© Tait Electronics Limited November 2007

11 Transmitter Fault Finding (>25W)

Introduction

This section covers the diagnosis of faults in the 40W/50W and 30W/35W transmitter circuitry. The main indication of a fault in the transmitter is a reduction in range. This implies that the power output is wrong or too low. Another type of fault is exhibited when the radio always transmits at full power, even if set otherwise. Regardless of the fault, the lock status should be normal.

Fault-Diagnosis Tasks

The procedure for diagnosing transmitter faults is divided into tasks, which are grouped into the following sections:

- "Power Supplies"
- "Transmitter RF Power"
- "Biasing of PA Driver and PAs"
- "RF Signal Path".

Before beginning the fault diagnosis with "Power Supplies", note the following information regarding CCTM commands, frequency bands, can removal and replacement, and transmit tests.

CCTM Commands

The CCTM commands required in this section are listed in Table 11.1. Full details of the commands are given in "Computer-Controlled Test Mode (CCTM)" on page 123.

© Tait Electronics Limited November 2007

Table 11.1 CCTM commands required for the diagnosis of faults in the transmitter

Command	Description
32	Set radio in receive mode
33	Set radio in transmit mode
47	Read temperature near PAs — displays temperature **x** in degrees celsius and voltage **y**
101 **x** **y** 0	Set transmit frequency (**x** in hertz) and receive frequency (**y** in hertz) to specified values
114 **x**	Set DAC value **x** (in range 0 to 1023) of transmit power
304	Read clamp current at gate of PA driver — displays DAC value **x** (in range 0 to 255)
304 **x**	Set DAC value **x** (in range 0 to 255) of clamp current at gate of PA driver
318	Read forward-power level — displays corresponding voltage **x** in millivolts
319	Read reverse-power level — displays corresponding voltage **x** in millivolts
326 **x**	Set transmitter power level **x** (0=off, 1=very low, 2=low, 3=medium, 4=high, 5=maximum)
331	Read bias voltage for first PA — displays DAC value **x** (in range 0 to 255)
331 **x**	Set DAC value **x** (in range 0 to 255) of bias voltage for first PA
332	Read bias voltage for second PA — displays DAC value **x** (in range 0 to 255)
332 **x**	Set DAC value **x** (in range 0 to 255) of bias voltage for second PA
334 **x**	Set synthesizer on (**x**=1) or off (**x**=0) via DIG SYN EN line
335 **x**	Set transmit-receive switch on (**x**=1) or off (**x**=0) via DIG SYN TR SW line

Frequency Bands

Where test procedures or figures differ according to the frequency band of the radio, the frequency band is given in brackets. The frequency band may be referred to as either 'VHF' (very high frequency) or 'UHF' (ultra high frequency) or identified by the frequency sub-band, such as 'B1' or 'H7'. For example:

RF output power: > 60W (**VHF**), > 52W (**UHF**)
current: < 15A (**VHF**), < 12A (**UHF**)

In some cases, differences in performance across a wide band of frequencies within a frequency band may mean that different figures are given for specific frequencies. For example:

RF output power: > 60W (**VHF**), > 52W (**UHF**), > 40W (**700MHz**), > 45W (**800MHz**)

A definition of frequency bands is given in "Defining Frequency Bands" on page 131.

Some fault-diagnosis tasks require programming the radio with the lowest, centre or highest frequency in the radio's frequency band. The relevant frequencies for the different bands are listed in Table 11.2.

© Tait Electronics Limited November 2007

Table 11.2 Lowest, centre and highest frequencies in MHz

Band	Lowest frequency	Centre frequency	Highest frequency
B1	136	155	174
G2	350	375	400
H5	400	435	470
H7	450	485	520
K5	762	816	870

Emergency Frequencies

The following frequency ranges are reserved worldwide for use as maritime emergency frequencies or by distress beacons:

- B1 band: 156.8 MHz ± 375 kHz
- H5 band: 406.0 to 406.1 MHz

Do not program the radio with any frequency in the above ranges.

Can Removal

There are five cans shielding the bulk of the transmitter circuitry:

- PAD TOP
- PAF TOP
- DIRC TOP
- PIN TOP
- LPF TOP.

To remove any can, first remove the board from the chassis. In the case of the PAD TOP and PAF TOP cans, first detach the heat-transfer block from the main board. Secure the block again after removing the cans. Follow the procedures given in "Disassembly and Reassembly" on page 135.

Can Replacement

Replace all cans that have been removed only after repairing the board. An exception is the B1 band, however, where the LPF TOP can must be in place if the transmitter is to operate correctly.

Transmit Tests

The following actions need to be taken when carrying out transmit tests:

- secure the board
- ensure the proper antenna load
- limit the duration of transmit tests
- protect against accidental transmissions
- avoid thermal and RF burns.

These points are discussed in more detail in the following sections.

Secure the Board

Before conducting any transmit tests, ensure that the board is adequately secured in the chassis. This is essential if overheating of the radio is to be avoided. (As mentioned earlier, the heat-transfer block must already be secured to the main board of the assembly.) It is good practice to secure the assembly by at least the two external screws and one of the internal screws. The screws are labelled ⑧ and ④ in Figure 5.3 on page 139. There is no need, however, to secure the lid of the radio body.

© Tait Electronics Limited November 2007

Ensure Proper Antenna Load

The radio has been designed to operate with a 50Ω termination impedance, but will tolerate a wide range of antenna loading conditions. Nevertheless, care should be exercised. Normally the RF connector on the board will be connected to the RF communications test set as shown in Figure 4.2 on page 116. But for those tests where this connection is not necessary, a 50Ω load may be used instead. Do not operate the transmitter without such a load or without a connection to the test set. Failure to do so may result in damage to the power output stage of the transmitter.

Limit Duration of Transmit Tests

After setting the frequency and power level (if necessary), enter the CCTM command *33* to perform a transmit test. This command places the radio in transmit mode. After completing the measurement or check required, immediately enter the CCTM command *32*. This command returns the radio to the receive mode. Restricting the duration of transmit tests in this way will further limit the danger of overheating. The reason for this precaution is that the transmit timers do not function in the CCTM mode.

Protect Against Accidental Transmissions

Under certain circumstances the microprocessor can key on the transmitter. Ensure that all instruments are protected at all times from such accidental transmissions.

Avoid Thermal and RF Burns

Avoid thermal burns. Do not touch the cooling fins or underside of the radio body when the transmitter is or has been operating. Avoid RF burns. Do not touch the antenna or the RF signal path on the circuit board while the transmitter is operating.

© Tait Electronics Limited November 2007

11.1 Power Supplies

Introduction

First check that a power supply is not the cause of the fault. There are two power supplies and a switch circuit for the transmitter:

- Task 1: 13.8V DC supply from power connector (+13V8 BATT)
- Task 2: switch circuit for 13.8V DC supply
- Task 3: 9V DC supply from 9V regulator in PSU module (+9V0 TX).

The measurement and test points for diagnosing faults in the power supplies are summarized in Figure 11.1.

Figure 11.1 Measurement and test points for diagnosing faults involving the power supplies for the transmitter

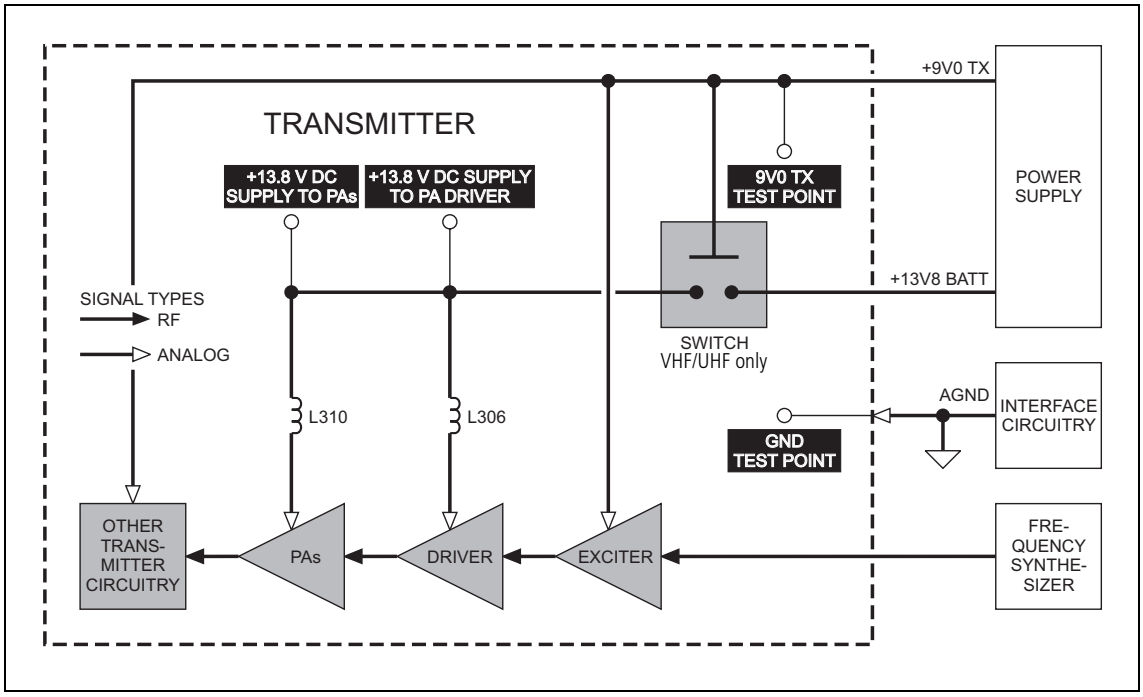

© Tait Electronics Limited November 2007

Task 1 — 13.8V Power Supply

First check the power supply from the power connector.

1. Obtain a needle probe to use for measurements of the power supply at the PA driver and PAs. If none is available, remove the PAF TOP and PAD TOP cans.

2. Set the DC power supply to 13.8V, with a current limit of 10A.

3. Program the radio with the highest frequency in the radio's frequency band: Enter the CCTM command *101 x x 0*, where ***x*** is the frequency in hertz. The required values for the different frequency bands are given in **Table 11.2**.

4. Enter the CCTM command *326 5* to set the radio to maximum power.

5. Attempt to place the radio in transmit mode. Enter the CCTM command *33*.

6. If the radio enters the transmit mode, continue with Step 7. If instead a *C03* error is displayed in response to the command *33*, go to Task 7 in "Transmitter RF Power" on page 278.

7. Measure the voltage at the point on **L310** shown in **Figure 11.2** (VHF) or **Figure 11.3** (UHF). This is the supply at the common drain of **Q309** and **Q310**, and should be:

common drain of Q309 and Q310: more than 13V DC

8. Also measure the voltage at the point on **L306** shown in **Figure 11.3**. This is the supply at the drain of **Q306**, and should be:

drain of Q306: more than 13V DC

9. Enter the CCTM command *32* to place the radio in receive mode.

10. If the power supply measured in Step 7 and Step 8 is correct, go to Task 3.

11. If the power supply measured in Step 7 and Step 8 is not correct:

    UHF and VHF transmitters: go to Task 2 (Check Switch Circuit).

    K5 band: there is no switch circuit, so the power supply to the drains of the PAs (Q309, Q310) and PA driver (Q306) is always on. Go to Step 12.

12. Check the connection on the board between **L310** and **L306** and the radio supply connector.

13. Repeat Task 1 to confirm the removal of the fault, and go to "Final Tasks" on page 157. If the repair failed or the fault could not be found, replace the board and go to "Final Tasks" on page 157.

© Tait Electronics Limited November 2007

Figure 11.2 Point for measuring the power supply to the PAs and PA driver (VHF)

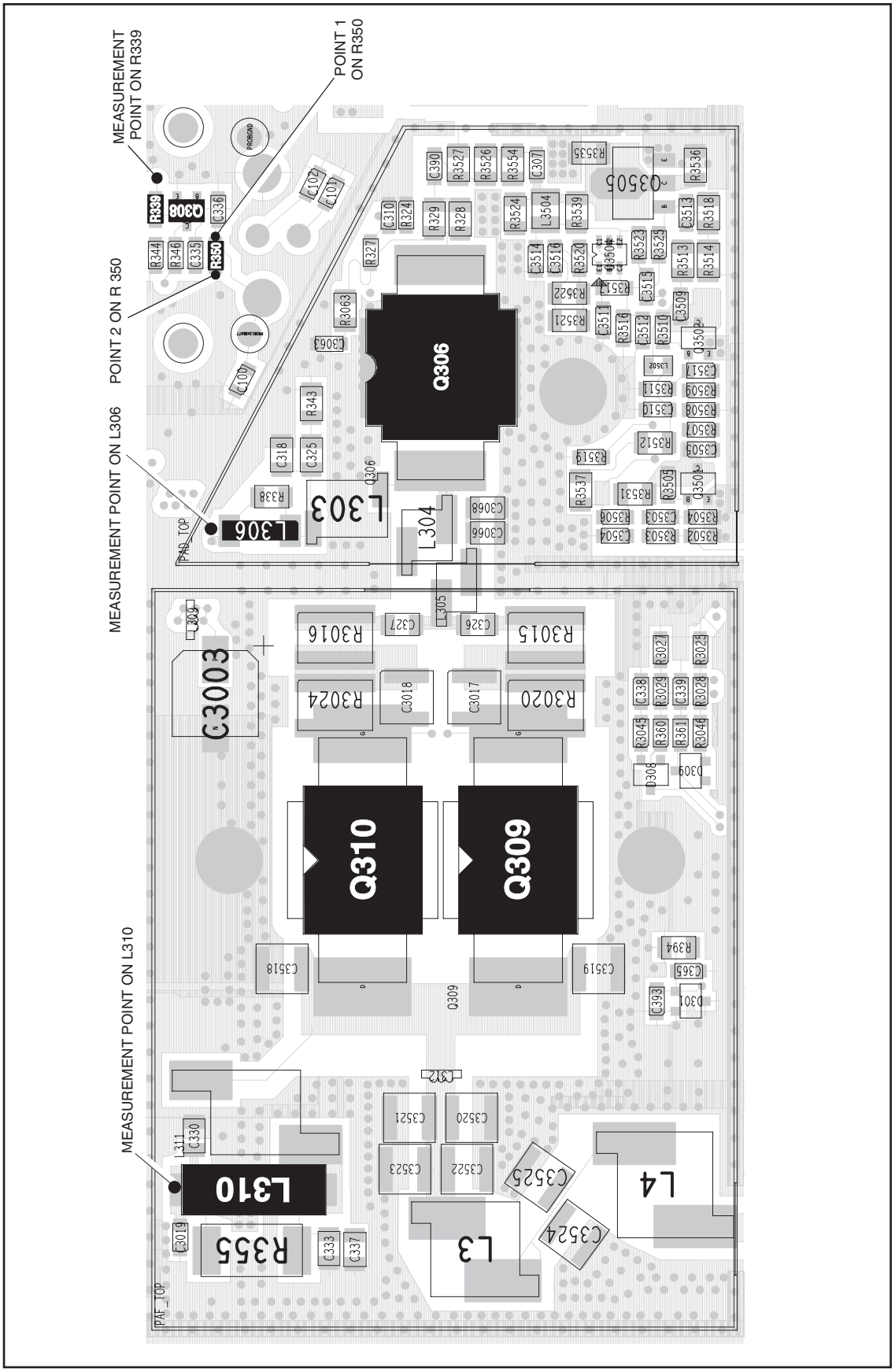

Figure 11.3 Point for measuring the power supply to the PAs and PA driver (UHF and K5 bands)

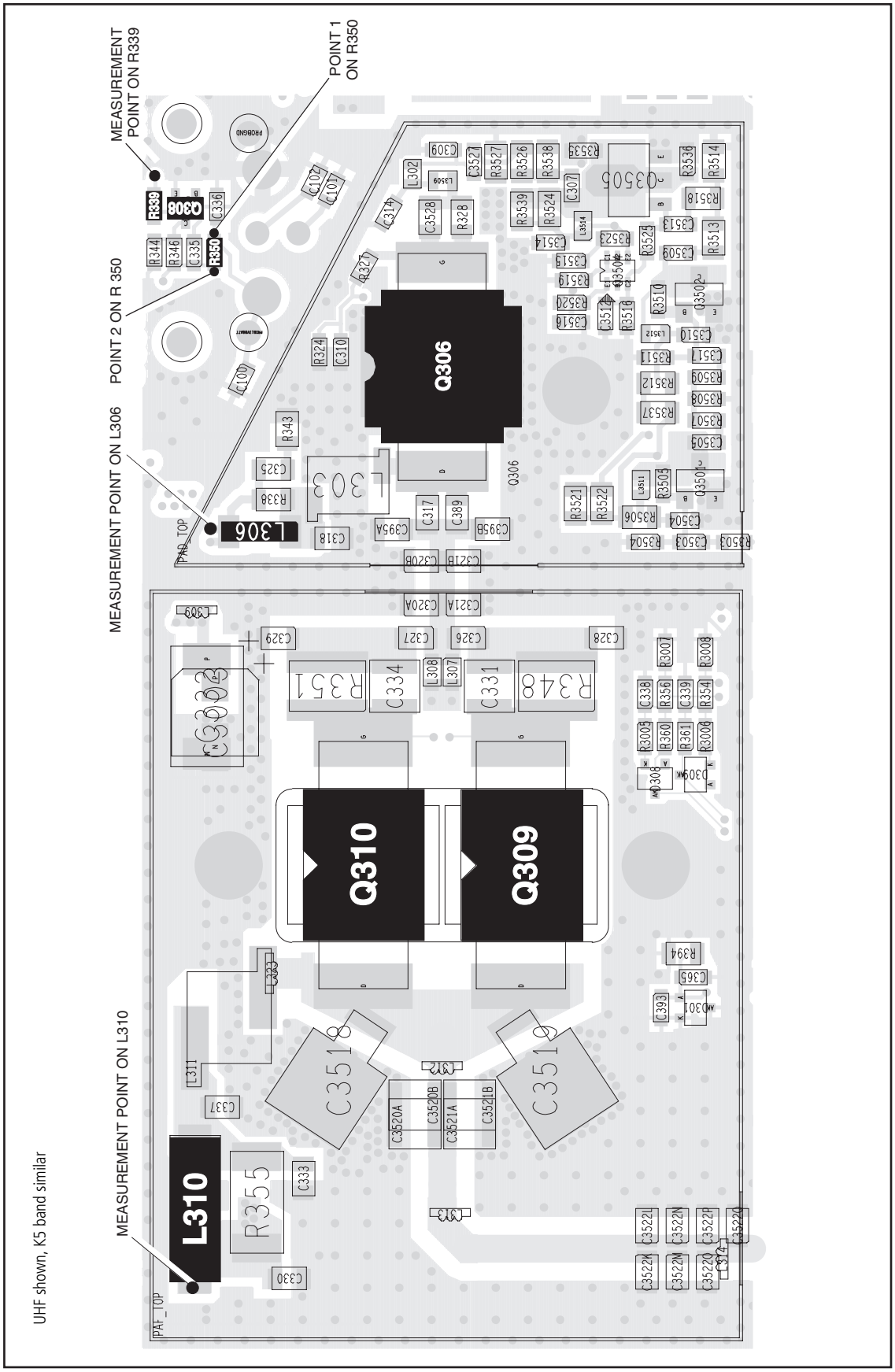

© Tait Electronics Limited November 2007

Task 2 — Check Switch Circuit

If the power supply to the drains of the PAs and PA driver is not correct, the switch circuit is suspect.Check the circuit as follows:

1. Measure the voltage at the point 1 on **R350** shown in **Figure 11.2** (VHF) or **Figure 11.3** (UHF). The voltage should be:

point 1 on R350: 13.8V DC

2. If the voltage measured in Step 1 is correct, go to Step 3. If it is not, check for continuity between **R350** and the power connector. Repair any fault and conclude with Step 8.

3. Measure the voltage at **R339** as shown in **Figure 11.2** (VHF) or **Figure 11.3** (UHF). The voltage should be:

R339: 9V DC

4. If the voltage measured in Step 3 is correct, go to Step 5. If it is not, go to Task 3 and check the 9V power supply.

5. Measure the voltage at the point 2 on **R350** shown in **Figure 11.2** (VHF) or **Figure 11.3** (UHF). The voltage should be:

point 2 on R350: < 5V DC

6. If the voltage measured in Step 5 is correct, go to Step 7. If it is not, replace **Q308** — see **Figure 11.2** (VHF) or **Figure 11.3** (UHF) — and conclude with Step 8.

7. Remove the heat-transfer block from the main board. Replace **Q311** (situated on the bottom-side of the main board next to the power connector). Replace the heat-transfer block, and conclude with Step 8.

8. Repeat Task 1 to confirm the removal of the fault, and go to "Final Tasks" on page 163. If the repair failed or the fault could not be found, replace the board and go to "Final Tasks" on page 163.

© Tait Electronics Limited November 2007

Task 3 — 9V Power Supply

If the supply from the power connector is correct, check the 9V DC supply.

1. Enter the CCTM command *326 1* to set the transmitter power level very low.

2. Enter the CCTM command *33* to place the radio in transmit mode.

3. Measure the supply voltage between the **9V0 TX test point** and the **GND test point** (see **Figure 11.4**).

supply 9V0 TX: 9.0 ± 0.5V DC

4. Enter the CCTM command *32* to place the radio in receive mode.

5. If the supply measured in Step 3 is correct, go to Task 4 in "Transmitter RF Power" on page 278. If it is not, the 9V regulator **IC601** and the associated switching circuitry **Q603** are suspect; go to Task 3 of "Power Supply Fault Finding" on page 174.

© Tait Electronics Limited November 2007

Figure 11.4 Test points for checking the 9V supply, the forward and reverse RF power, and the inhibiting of the transmitter

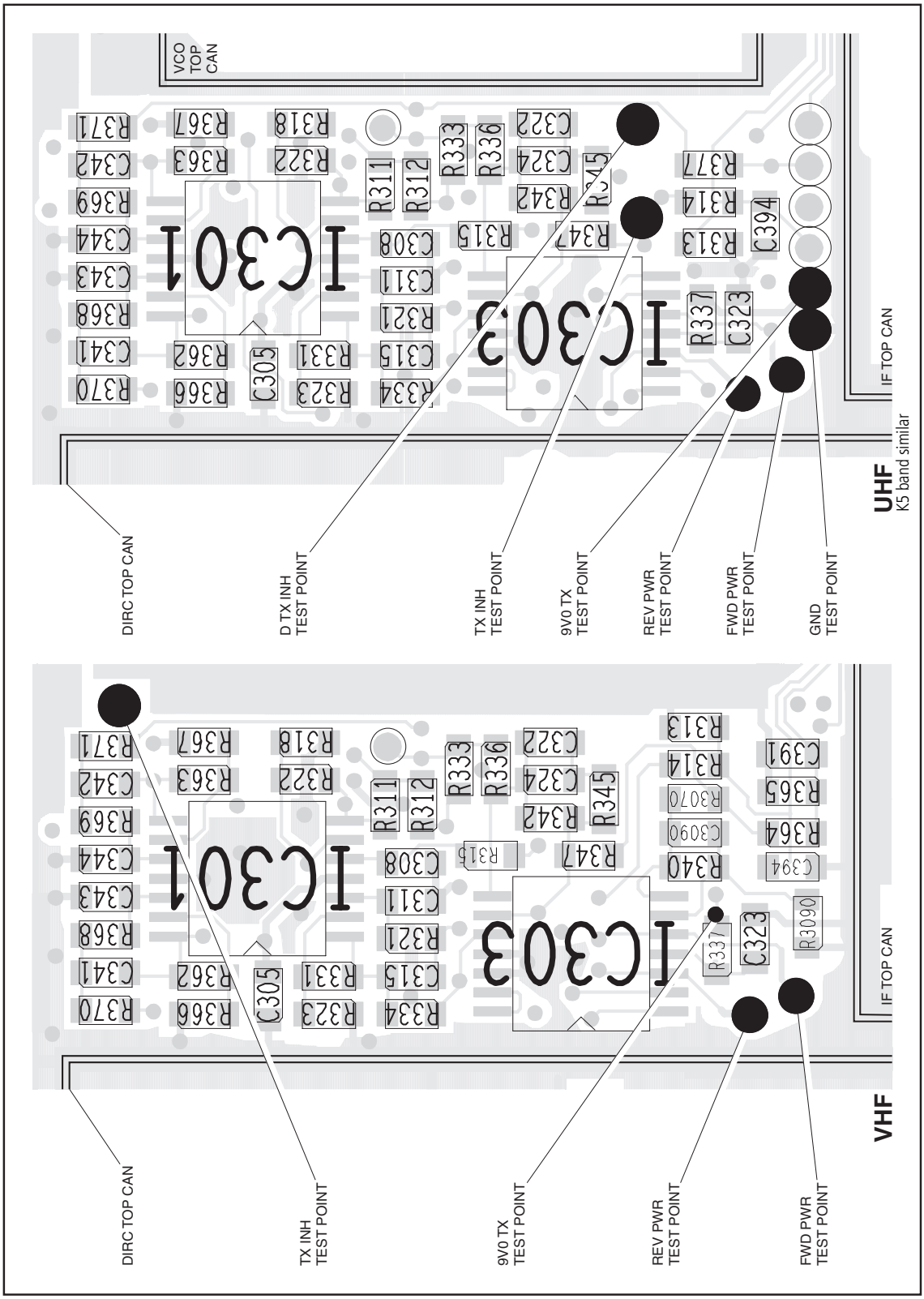

11.2 Transmitter RF Power

Introduction

If there is no fault with the power supplies, check the transmitter RF power and correct any fault. The procedure is covered in the following eight tasks:

- Task 4: check forward and reverse powers
- Task 5: check RF output power
- Task 6: power unchanged regardless of setting
- Task 7: check for inhibiting of transmitter
- Task 8: check temperature sensor
- Task 9: power and current are skewed
- Task 10: repair output matching circuitry
- Task 11: power and current are low

The measurement points for diagnosing faults concerning the transmitter RF power are summarized in Figure 11.5. Data required for the first task (checking the forward and reverse powers) is supplied in Table 11.3.

Table 11.3 Voltages in millivolts corresponding to nominal forward and reverse powers

Frequency band	Forward power (318 command)	Reverse power (319 command)
B1	2600 to 3400	< 500
G2	3100 to 3800	< 600
H5	3200 to 3900	< 700
H7	3300 to 4000	< 900
K5	2000 to 2800	< 500

© Tait Electronics Limited November 2007

Figure 11.5 Measurement and test points for diagnosing faults concerning the transmitter RF power

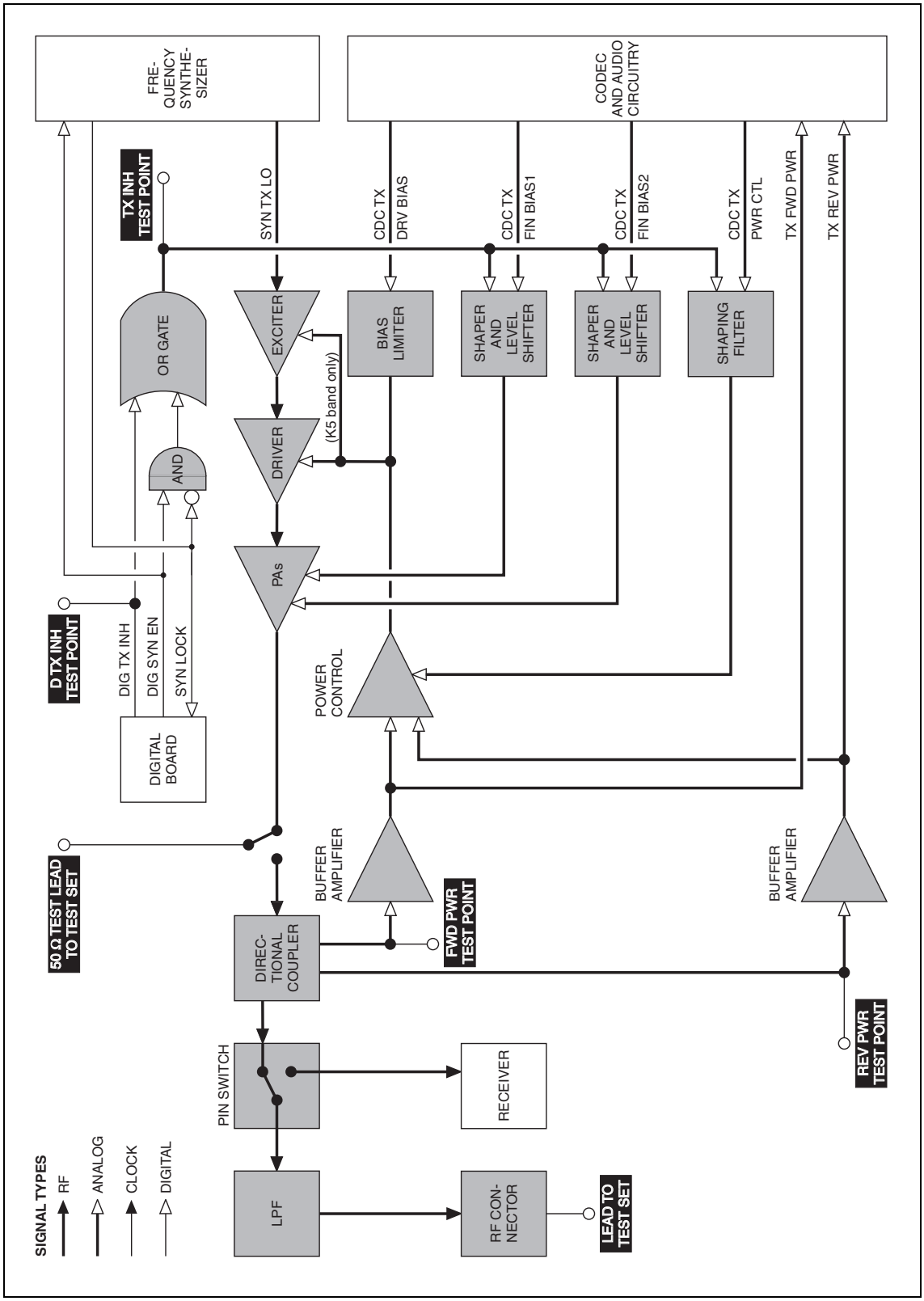

Task 4 — Check Forward and Reverse Powers

First check the forward and reverse powers for an indication of which part of the circuitry is suspect.

1. Enter the CCTM command *326 4* to set the transmitter power level high.

2. Enter the CCTM command *33* to place the radio in transmit mode.

3. Enter the CCTM command *318* to check the forward power. The value returned is the voltage in millivolts corresponding to the power level, and should be as shown in **Table 11.3**.

4. Confirm the above result by checking the level at the **FWD PWR test point** (see **Figure 11.4**) using an oscilloscope.

5. Enter the CCTM command *319* to check the reverse power. The value returned is the voltage in millivolts corresponding to the power level, and should be as shown in **Table 11.3**.

6. Confirm the above result by checking the level at the **REV PWR test point** (see **Figure 11.4**) using an oscilloscope.

   If the oscilloscope momentarily indicates a very high reverse power, then the most likely scenario is that the antenna VSWR threshold has been exceeded and the PA has shut down to very low power.

7. Enter the CCTM command *32* to place the radio in receive mode.

8. If the values obtained in Step 3 and Step 5 are both correct, and there is no indication of a momentary high reverse power, go to Task 5. If one or both are incorrect, go to Step 9.

9. Check the connection from the RF connector on the radio to the test set.

10. If there is no fault, go to Step 11. If there is, rectify the fault and repeat the above measurements.

11. If the reverse power is momentarily too high, the directional coupler, PIN switch or LPF is suspect; go to Task 31. Otherwise go to Task 5.

© Tait Electronics Limited November 2007

Task 5 — Check RF Output Power

If the power supplies are correct, check the RF output power of the transmitter.

1. Enter the CCTM command *326 5* to set the transmitter power level to the maximum value.

2. If not already done, program the radio with the highest frequency in the radio's frequency band: Enter the CCTM command *101 **x x** 0*, where ***x*** is the frequency in hertz. The required values for the different frequency bands are given in **Table 11.2**.

3. Enter the CCTM command *33* to place the radio in transmit mode.

4. Note the RF output power measured by the test set, and note the current reading on the DC power supply.

RF output power: > 60W (VHF), > 52W (UHF), > 40W (700 MHz), > 45W (800MHz) current: < 15A (VHF), < 12A (UHF), <12A (800MHz)

5. Enter the CCTM command *32* to place the radio in receive mode.

6. Program the radio with the centre frequency in the radio's frequency band: Enter the CCTM command *101 **x x** 0*, where ***x*** is the frequency in hertz. The required values for the different frequency bands are given in **Table 11.2**.

7. Repeat Step 3 to Step 5.

8. Program the radio with the lowest frequency in the radio's frequency band: Enter the CCTM command *101 **x x** 0*, where ***x*** is the frequency in hertz. The required values for the different frequency bands are given in **Table 11.2**.

9. Repeat Step 3 to Step 5.

10. Depending on the results of the above measurements, proceed to the task indicated in **Table 11.4**. Note that the power and current are considered to be skewed if they are low at one part of the frequency band and high elsewhere.

Table 11.4 Tasks to be performed according to the results of the power and current measurements of Task 5

Power	Current	Task
Correct	Correct	Task 6 — Power unchanged regardless of setting
Correct	Wrong	Task 31 — Check power at directional coupler
Skewed	Skewed	Task 9 — Power and current are skewed
Low (> 0.1W)	Low (> 0.5A)	Task 11 — Power and current are low
None at RF connector (< 0.1W)	Low (> 0.5A)	Task 31 — Check power at directional coupler
None at RF connector (< 0.1W)	None (< 0.5A)	Task 7 — Check for inhibiting of transmitter

© Tait Electronics Limited November 2007

Task 6 — Power Unchanged Regardless of Setting

If all the power and current values measured in Task 5 are correct, it is likely that the power remains unchanged regardless of the power setting.

1. Enter the following CCTM commands in turn and measure the RF output power in each case:
   - *326 4*
   - *326 3*
   - *326 2*
   - *326 1*
2. The above measurements should confirm that the power remains unchanged at all settings. Carry out Task 12 and then Task 19.

© Tait Electronics Limited November 2007

Task 7 — Check for Inhibiting of Transmitter

If the transmitter is drawing no current or the wrong current, check whether it is being inhibited. This check is also required if a *CO3* error occurs in Task 1.

1. If not already done, enter the CCTM command *33* to place the radio in transmit mode.

2. Check the logic signal at the **TX INH test point** (see **Figure 11.4**). The signal should be:

TX INH test point: about 0V (inactive)

3. If the signal is inactive as required, go to Step 4. If it is active — about 1.1V — the transmitter is being inhibited; go to Step 5.

4. Enter the CCTM command *32* to place the radio in receive mode, and go to Task 12 in "Biasing of PA Driver and PAs" on page 290.

5. Check the logic signal at the **D TX INH test point**; see **Figure 11.17 on page 310** (VHF) or **Figure 11.4** (UHF). The signal should be:

D TX INH test point: about 0V (inactive)

6. If the signal is inactive as required, go to Step 8. If it is active — about 3.2V — the temperature sensor is suspect; go to Step 7.

7. Enter the CCTM command *32* to place the radio in receive mode, and go to Task 8.

8. The lock status is possibly no longer normal. Enter the CCTM command *72* and check the lock status.

9. Enter the CCTM command *32* to place the radio in receive mode.

10. The normal lock status is *110*. If it is not, proceed to the relevant section. If it is, go to Step 11.

11. Check for short circuits on the DIG TX INH line from the **D TX INH test point**.

12. Repair any fault, confirm the removal of the fault, and go to "Final Tasks" on page 163. If the repair failed or no fault could be found, replace the board and go to "Final Tasks" on page 163.

© Tait Electronics Limited November 2007

Task 8 — Check Temperature Sensor

If the transmitter is being inhibited and the logic signal at the D TX INH test point is active, a fault in the temperature sensor may be the cause.

1. Enter the CCTM command *47* to check the temperature reading.
2. Of the two numbers returned, the first is the temperature in degrees celsius and should be about 25°C. If it is, go to Task 12 in "Biasing of PA Driver and PAs" on page 290. If it is not, go to Step 3.
3. If not already done, remove the PAF TOP can.
4. Check **D301** and the surrounding components — see **Figure 11.6** (UHF shown).
5. If there is no fault, go to "CODEC and Audio Fault Finding" on page 399. If a fault is found, repair it, confirm the removal of the fault, and go to "Final Tasks" on page 163. If the repair failed, replace the board, and go to "Final Tasks" on page 163.

© Tait Electronics Limited November 2007

Figure 11.6 PA circuitry under the PAF TOP can and part of the directional coupler under the DIRC TOP can (VHF and UHF bands)

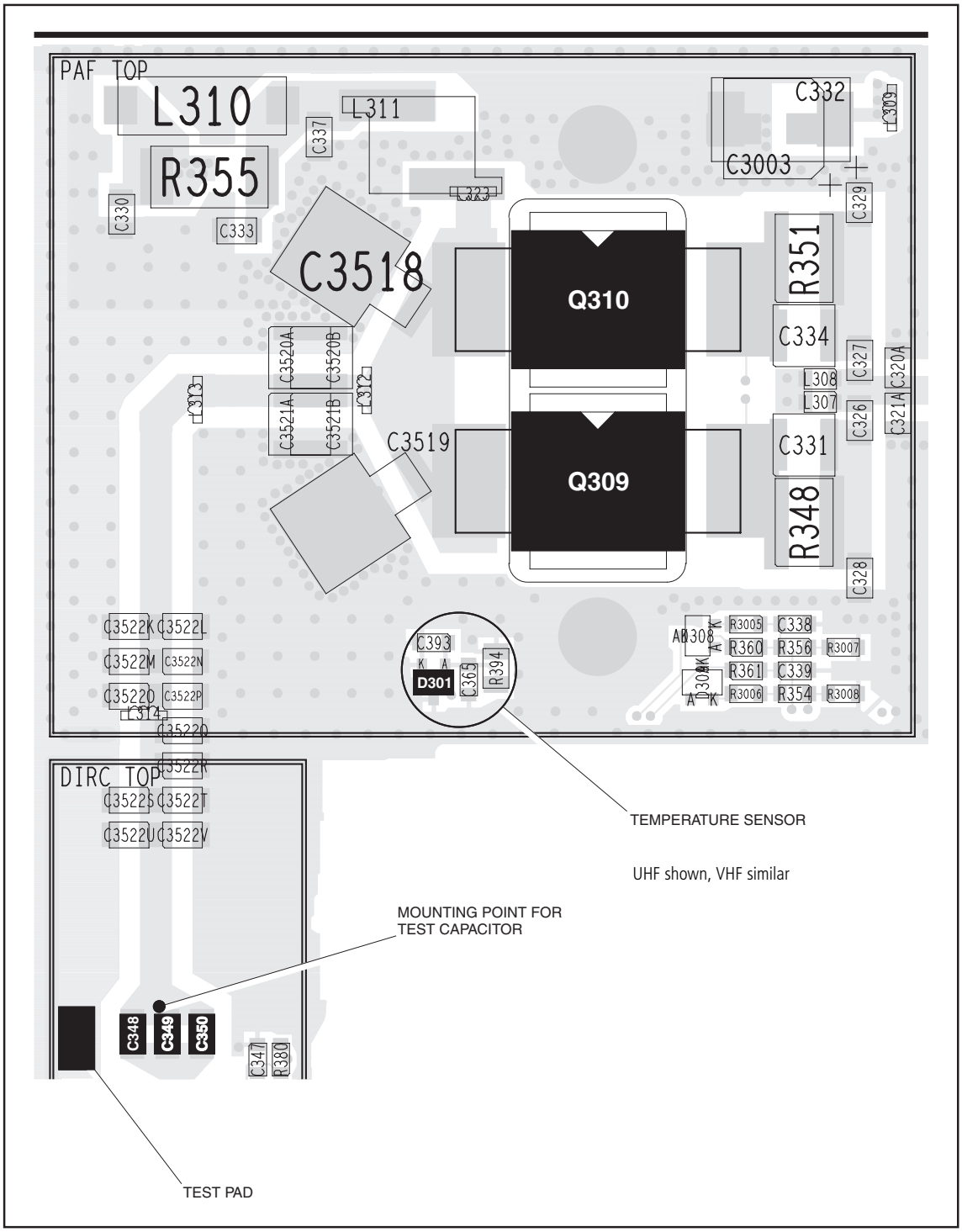

Figure 11.7 PA circuitry under the PAF TOP can and part of the directional coupler under the DIRC TOP can (K5 band)

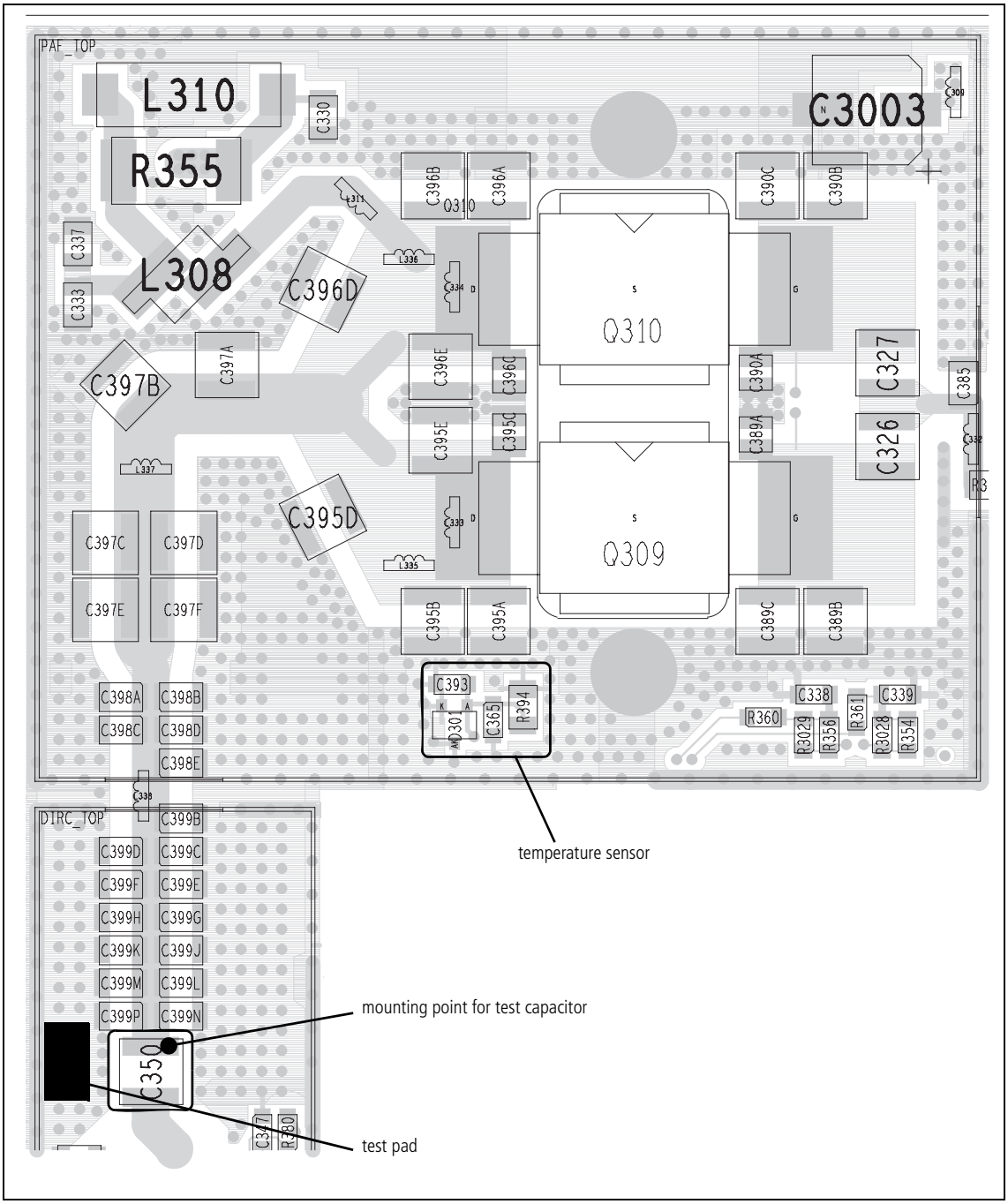

© Tait Electronics Limited November 2007

Task 9 — Power and Current Are Skewed

If the RF output power and the supply current are skewed, the output matching is suspect.

1. Remove the DIRC TOP can.

2. Remove the coupling capacitors **C348**, **C349** and **C350** (or **C350** only, for K5)— see **Figure 11.6** (UHF shown) and **Figure 11.7** (K5 band).

3. Solder one terminal of a 1000pF (VHF), 82pF (UHF), or 47pF (K5 band) test capacitor to the PCB at the point shown in **Figure 11.6** and **Figure 11.7**. Mount the capacitor vertically. Use a test capacitor of the type GRM111, DLI C17, ATC100B, or equivalent.

4. Solder a 50Ω test lead to the PCB. Solder the outer sheath to the test pad shown in **Figure 11.6** and **Figure 11.7**, and solder the central wire to the other terminal of the test capacitor.

5. Connect the test lead to the test set.

6. Program the radio with the highest frequency in the radio's frequency band: Enter the CCTM command *101 **x** **x** 0*, where ***x*** is the frequency in hertz. The required values for the different frequency bands are given in **Table 11.2**.

7. Enter the CCTM command *33* to place the radio in transmit mode.

8. Note the RF output power measured by the test set, and note the current reading on the DC power supply.

RF output power: > 70W (VHF), > 60W (UHF), > 52W (700 MHz), > 58W (800 MHz) current: < 15A (VHF), < 12A (UHF), < 12A (800 MHz)

9. Enter the CCTM command *32* to place the radio in receive mode.

10. Program the radio with the centre frequency in the band: Enter the CCTM command *101 **x** **x** 0*, where ***x*** is the frequency in hertz.

11. Repeat Step 7 to Step 9.

12. Program the radio with the lowest frequency in the band: Enter the CCTM command *101 **x** **x** 0*, where ***x*** is the frequency in hertz.

13. Repeat Step 7 to Step 9.

14. If the power and current are still skewed, go to Task 10. If the power and current are correct, remove the test lead and test capacitor, resolder the coupling capacitors in position, and go to Task 33 — the PIN switch and LPF require checking.

© Tait Electronics Limited November 2007

Task 10 — Repair Output Matching Circuitry

If the checks in Task 9 show that the power and current are still skewed, there is a fault in the output matching circuitry.

1. If not already done, remove the PAF TOP can.

2. Check for faulty, shorted or misplaced components in the circuit between the test capacitor and the common drain of **Q309** and **Q310** (see **Figure 11.6**). Repair any fault.

3. Program the radio with the highest frequency in the radio's frequency band: Enter the CCTM command *101 **x x** 0*, where ***x*** is the frequency in hertz. The required values for the different frequency bands are given in **Table 11.2**.

4. Enter the CCTM command *33* to place the radio in transmit mode.

5. Note the RF output power measured by the test set, and note the current reading on the DC power supply.

RF output power: > 70W (VHF), > 60W (UHF), > 52W (700 MHz), > 58W (800 MHz) current: < 15A (VHF), < 12A (UHF), < 12A (800 MHz)

6. Enter the CCTM command *32* to place the radio in receive mode.

7. Program the radio with the centre frequency in the band: Enter the CCTM command *101 **x x** 0*, where ***x*** is the frequency in Hertz.

8. Repeat Step 4 to Step 6.

9. Program the radio with the lowest frequency in the band: Enter the CCTM command *101 **x x** 0*, where ***x*** is the frequency in Hertz.

10. Repeat Step 4 to Step 6.

11. Remove the test lead and test capacitor, and resolder the coupling capacitors **C348**, **C349** and **C350** in position (see **Figure 11.6**).

12. If the power and current are now correct at all three frequencies, the fault has been rectified; go to "Final Tasks" on page 163. If they are not, go to Task 26 in "RF Signal Path" on page 316.

© Tait Electronics Limited November 2007

Task 11 — Power and Current Are Low

If the RF output power and the supply current are uniformly low at all frequencies, one of the PAs is suspect or the input to the PAs is reduced. Check each PA in turn:

1. For the first PA (Q310), enter the CCTM command *331* to check the DAC value of final bias 1 (CDC TX FIN BIAS 1). Record the value ***x*** returned.

2. Note the current reading on the DC power supply.

3. Enter the CCTM command *331 1* to turn off final bias 1.

4. Enter the CCTM command *33* to place the radio in transmit mode.

5. Note the RF output power measured at the test set. This should be as shown in **Table 11.5**.

6. If the RF power is correct, go to Step 7 to repeat the check with the second PA. If it is not, enter the CCTM command *32* to place the radio in receive mode, and carry out Task 12 and then Task 13.

7. For the second PA (Q309), enter the CCTM command *332* to check the DAC value of final bias 2 (CDC TX FIN BIAS 2). Record the value ***y*** returned.

8. Note the current reading on the DC power supply.

9. Enter the CCTM command *332 1* to turn off final bias 2.

10. With the radio still in transmit mode, note the RF output power measured at the test set. This should be as shown in **Table 11.5**.

11. Enter the CCTM command *32* to place the radio in receive mode.

12. If the RF power measured in Step 10 is correct, go to "RF Signal Path" on page 315. If it is not, carry out Task 12 and then Task 16.

Table 11.5 RF output power of individual RF power amplifiers at different frequencies

Frequency band	Frequency within band		
	Lowest frequency	Centre frequency	Highest frequency
B1	38 ± 5W	48 ± 5W	33 ± 5W
G2	17 ± 5W	18 ± 5W	22 ± 5W
H5	16 ± 5W	17 ± 5W	21 ± 5W
H7	25 ± 5W	32 ± 5W	40 ± 5W
K5	17 ± 5W	18 ± 5W	28 ± 5W

© Tait Electronics Limited November 2007

11.3 Biasing of PA Driver and PAs

Introduction

The measurements of the transmitter RF output power in "Transmitter RF Power" may indicate a need to check the biasing of the two PAs and the PA driver. The procedure is covered in this section. There are thirteen tasks grouped as follows:

- Task 12: prepare to check biasing
- Task 13 to Task 15: check biasing of first PA
- Task 16 to Task 18: check biasing of second PA
- Task 19 and Task 20: check biasing of PA driver
- Task 21 to Task 24: repair circuitry

The test and measurement points for diagnosing faults in the biasing of the PAs and PA driver are summarized in Figure 11.8.

Task 12 — Prepare to Check Biasing

If the transmitter is not being inhibited, check the biasing of the two PAs and the PA driver. First make the following preparations:

1. Set the current limit on the DC power supply to 3A.
2. Enter the CCTM command *331* to check the DAC value of final bias 1 (CDC TX FIN BIAS 1) at maximum power. Record the value ***x*** returned.
3. Enter the CCTM command *332* to check the DAC value of final bias 2 (CDC TX FIN BIAS 2) at maximum power. Record the value ***y*** returned.
4. Enter the CCTM command *304* to check the DAC value of the clamp current at the driver gate. Record the value ***z*** returned.
5. Enter the CCTM command *33* to place the radio in transmit mode.
6. Switch off all biases by entering the following CCTM commands in sequence:
   - *331 1*
   - *332 1*
   - *304 1*
   - *114 1023*
   - *334 0*
   - *335 0*
7. Note the current reading on the DC power supply. This will be less than 500mA.
8. With the radio still in transmit mode, check the biasing of the PAs and PA driver, beginning with Task 13.

© Tait Electronics Limited November 2007

Figure 11.8 Measurement and test points for diagnosing faults in the biasing of the PAs and PA driver

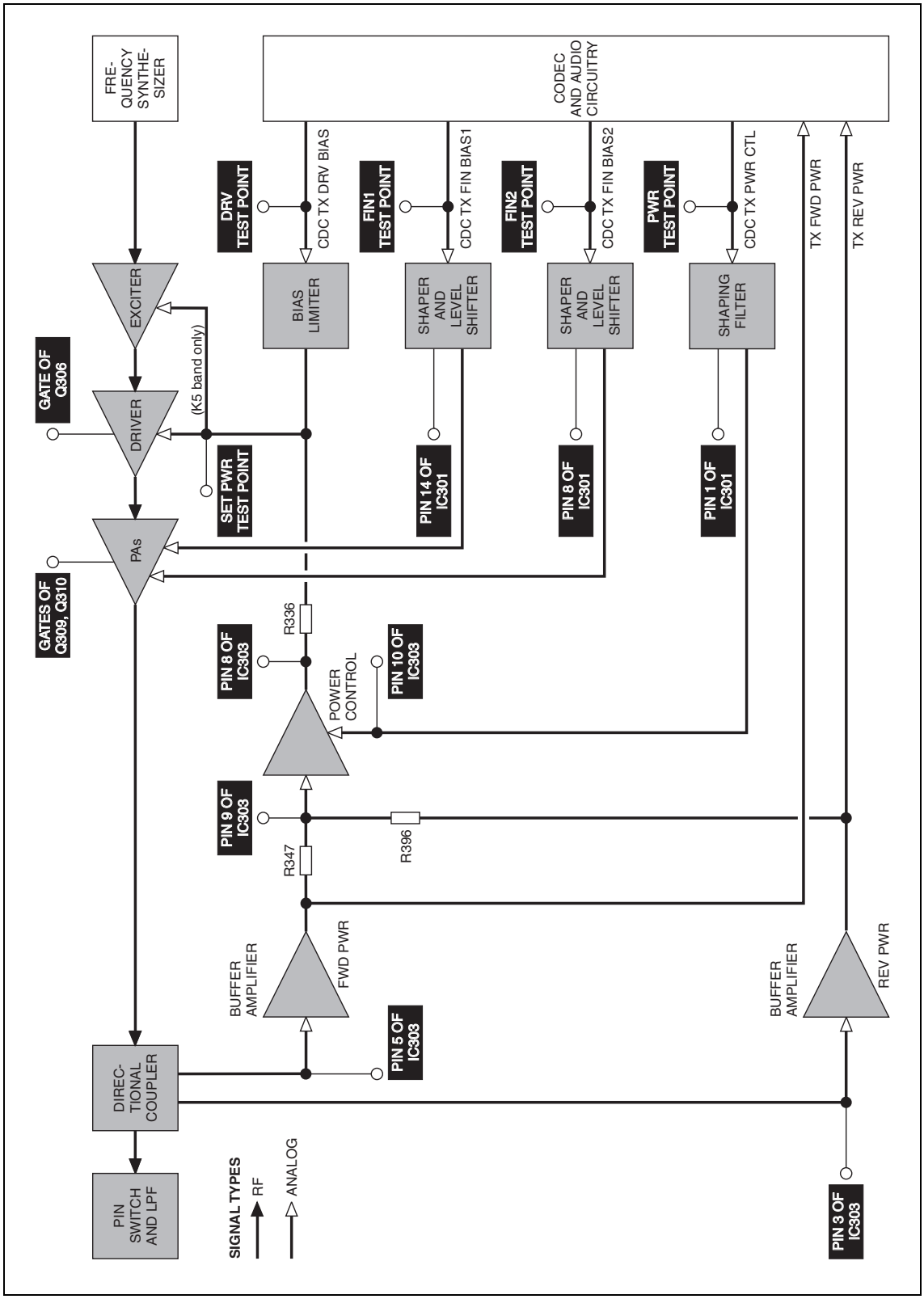

Task 13 — Check Biasing of First PA

Check the biasing of the first PA (Q310).

Important Ensure that the current limit on the DC supply is 3A. And, when entering the CCTM command *331 **x***, do not specify a value ***x*** higher than that recorded in Task 12. Failure to do so may result in the destruction of the PAs.

1. Use a multimeter to measure the voltage at pin 14 of **IC301** (see **Figure 11.9** and **Figure 11.10**). The voltage should be:

   pin 14 of IC301: < 100mV (initially)

2. Note the current reading on the DC power supply. As mentioned in Step 7 of Task 12, this will be less than 500mA.

3. Enter the CCTM command *331 **x*** (where ***x*** was recorded in Task 12).

4. Check that the voltage changes to:

   pin 14 of IC301: 2 to 5V (after entry of CCTM 331 **x**)

5. Also note the current reading. This should increase by an amount approximately equal to the offset given in **Table 11.6**.

6. If the voltage and current are both correct, go to Step 7. If the voltage is correct but not the current, go to Task 14. If neither the current nor the voltage is correct, go to Task 15.

7. Enter the CCTM command *331 1* to switch off final bias 1, and go to Task 16.

Table 11.6 Gate biases for the PAs and PA driver at high power

Frequency band	Offset currents in mA		
	First PA	Second PA	PA driver
B1	1690	1690	150
G2	1800	1800	400
H5	1800	1800	400
H7	1800	1800	600
K5	2000	2000	550

© Tait Electronics Limited November 2007

Figure 11.9 Test points and components of the shaping filter (VHF)

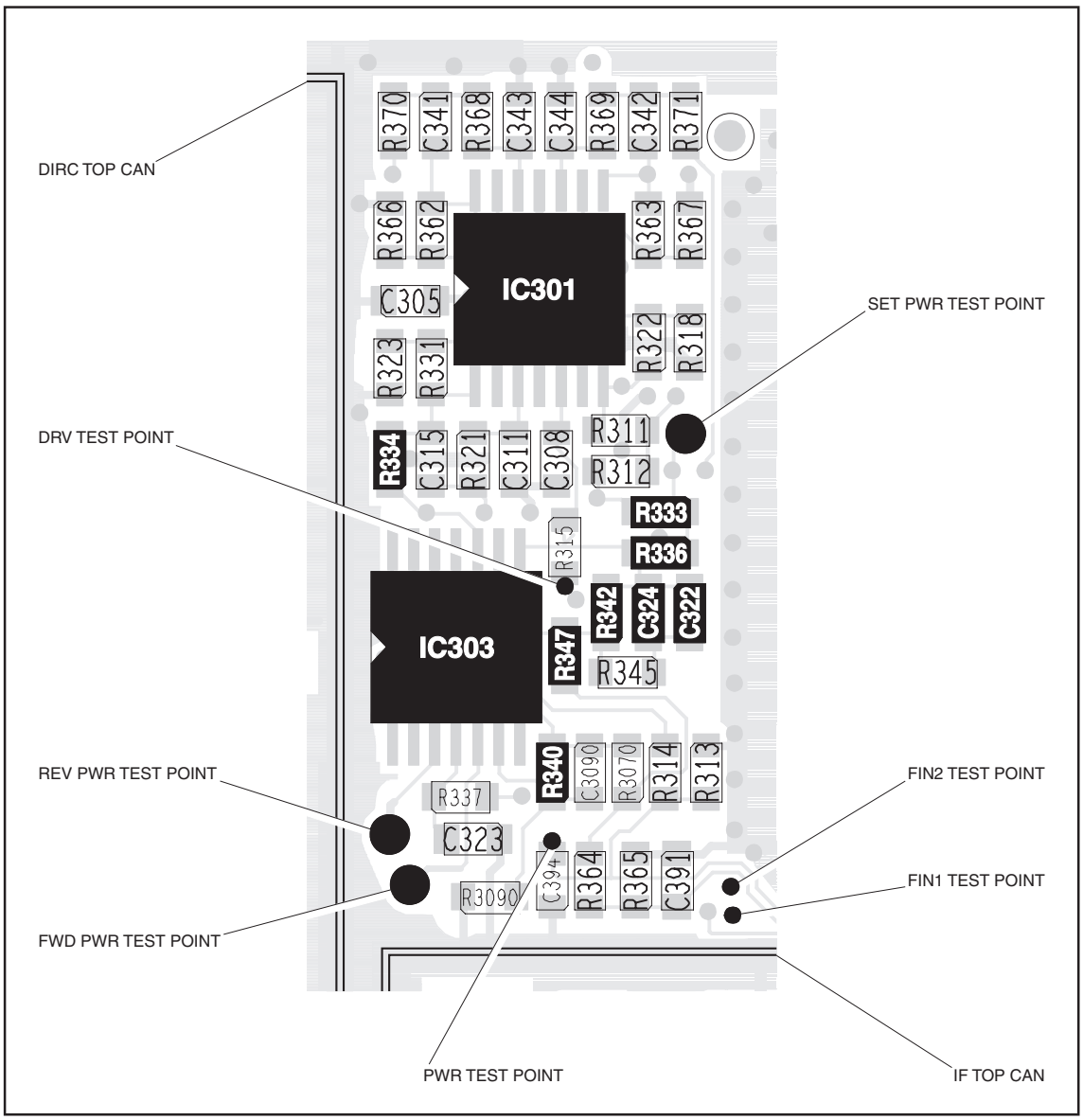

© Tait Electronics Limited November 2007

Figure 11.10 Test points and components of the shaping filter (UHF and K5 bands)

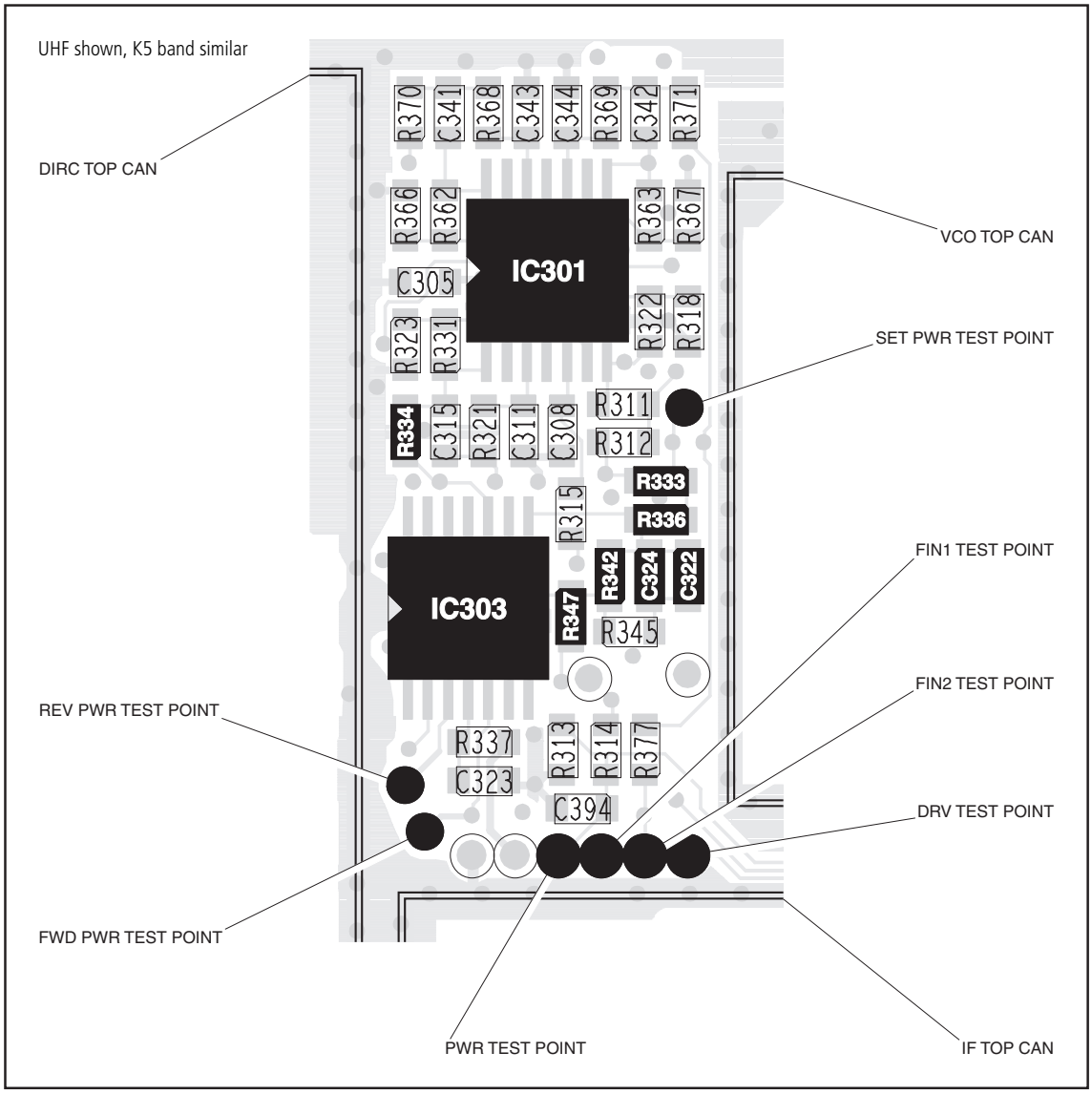

© Tait Electronics Limited November 2007

Task 14 — Shaper and Level Shifter

If the voltage measured in Task 13 is correct but not the current, either the first PA or the shaper and level shifter for the PA is suspect.

Important Ensure that the current limit on the DC supply is 3A. And, when entering the CCTM command *331 **x***, do not specify a value ***x*** higher than that recorded in Task 12. Failure to do so may result in the destruction of the PAs.

1. If the PAF TOP can has already been removed, go to Step 5 If it has not, go to Step 2.
2. Enter the CCTM command *32* to place the radio in receive mode.
3. Remove the PAF TOP can.
4. Enter the CCTM command *33* to place the radio in transmit mode.
5. Enter the CCTM command *331 **x*** (where ***x*** was recorded in Task 12).
6. Check that the voltage at the gate of **Q310** is (see **Figure 11.11**):

gate of Q310: 2 to 5V

7. Enter the CCTM command *32* to place the radio in receive mode.
8. If the voltage measured above is correct, **Q310** is faulty; replace the board and go to "Final Tasks" on page 163. If it is not correct, go to Step 9.
9. Check the circuitry between pin 14 of **IC301** and the gate of **Q310** (see **Figure 11.11**). If a fault is found, repair it, confirm the removal of the fault, and go to "Final Tasks" on page 163. If the repair failed or Q310 itself is faulty, replace the board and go to "Final Tasks" on page 163.

© Tait Electronics Limited November 2007

Figure 11.11 PA circuitry under the PAF TOP can (VHF and UHF)

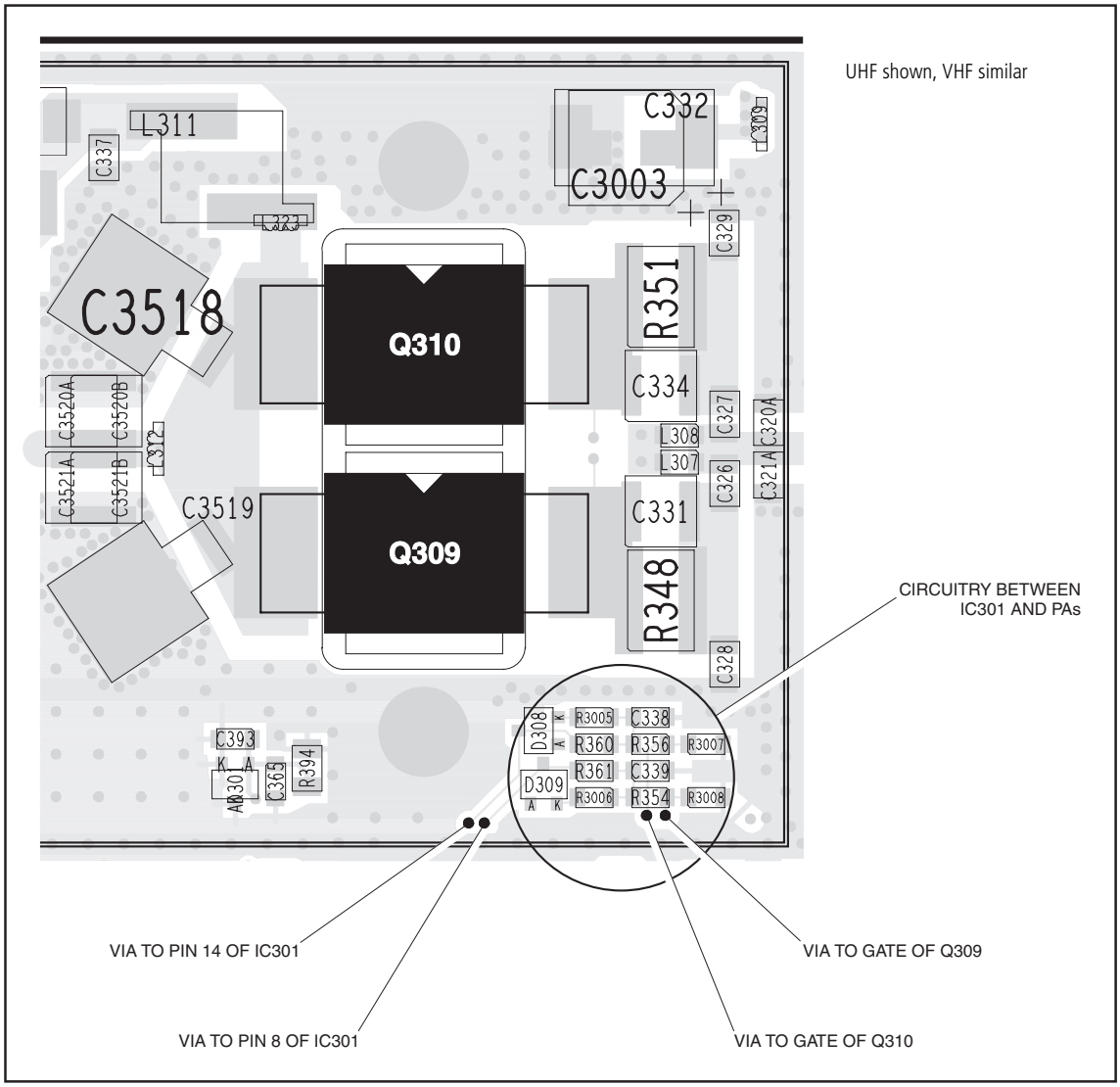

© Tait Electronics Limited November 2007

Figure 11.12 PA circuitry under the PAF TOP can (K5 band)

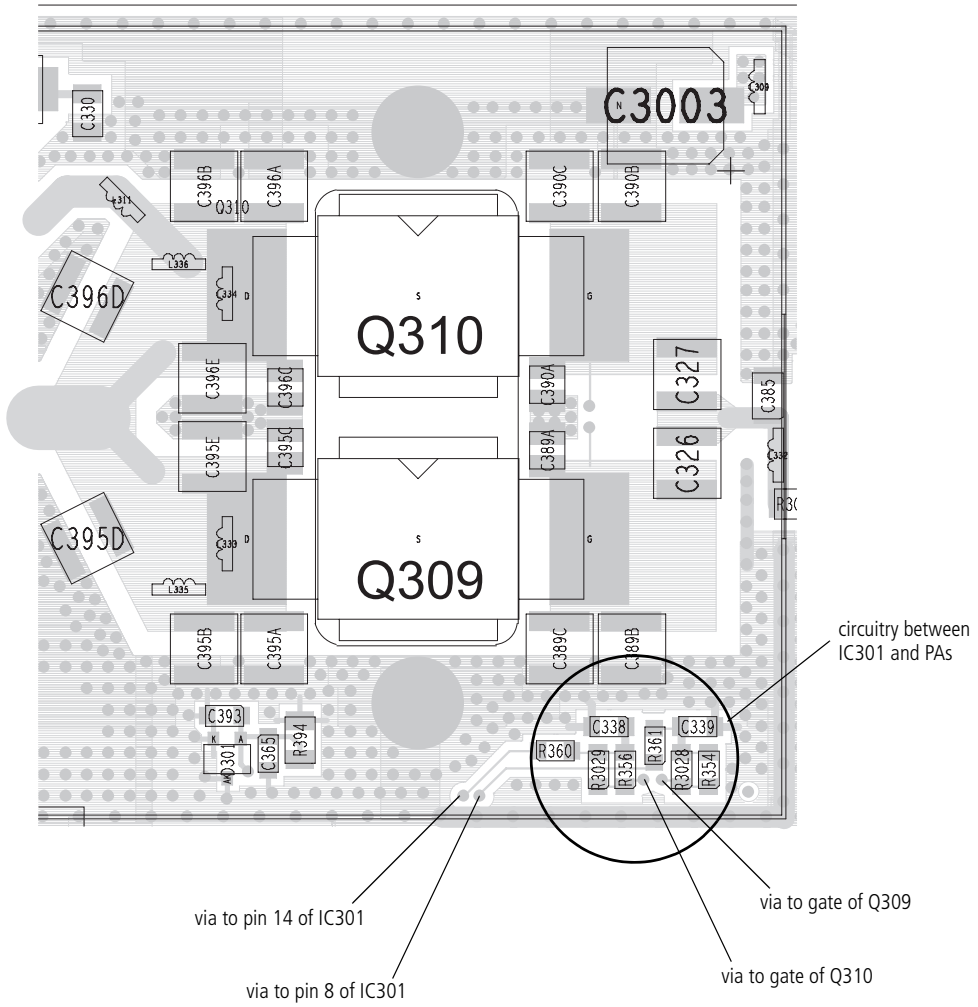

Task 15 — Shaping Filter for Power Control

If neither the voltage nor the current measured in Task 13 is correct, then the shaping filter for the power-control circuitry or the CODEC and audio circuitry is suspect.

Important Ensure that the current limit on the DC supply is 3 A. And, when entering the CCTM command *331 **x***, do not specify a value ***x*** higher than that recorded in Task 12. Failure to do so may result in the destruction of the PAs.

1. Use the multimeter to measure the voltage at the **FIN1 test point** (see **Figure 11.9** and **Figure 11.10**). The voltage should be:

FIN1 test point: 18 ± 2 mV (initially)

2. Enter the CCTM command *331 **x*** (where ***x*** was recorded in Task 12).

3. Check that the voltage changes to:

FIN1 test point: 1.1 to 2.7 V (after entry of CCTM 331 **x**)

4. Enter the CCTM command *32* to place the radio in receive mode.

5. If the voltage measured above is correct, go to Step 6. If it is not, go to "CODEC and Audio Fault Finding" on page 399.

6. Check **IC301** and the surrounding shaping-filter circuitry (see **Figure 11.9** and **Figure 11.10**). If a fault is found, repair it, confirm the removal of the fault, and go to "Final Tasks" on page 163. If the repair failed, replace the board and go to "Final Tasks" on page 163.

© Tait Electronics Limited November 2007

Task 16 — Check Biasing of Second PA

If the biasing of the first PA is correct, check that of the second PA (Q309).

Important Ensure that the current limit on the DC supply is 3A. And, when entering the CCTM command *332 **y***, do not specify a value ***y*** higher than that recorded in Task 12. Failure to do so may result in the destruction of the PAs.

1. Use the multimeter to measure the voltage at pin 8 of **IC301** (see **Figure 11.9** and **Figure 11.10**). The voltage should be:

pin 8 of IC301: < 100mV (initially)

2. Note the current reading on the DC power supply. As mentioned in Step 7 of Task 12, the current will be less than 500mA.

3. Enter the CCTM command *332 **y*** (where ***y*** was recorded in Task 12).

4. Check that the voltage changes to:

pin 8 of IC301: 2 to 5V (after entry of CCTM 332 **y**)

5. Also note the current reading. This should increase by an amount approximately equal to the offset given in **Table 11.6**.

6. If the voltage and current are both correct, go to Step 7. If the voltage is correct but not the current, go to Task 17. If neither the current nor the voltage is correct, go to Task 18.

7. Enter the CCTM command *332 1* to switch off final bias 2, and go to Task 19.

© Tait Electronics Limited November 2007

Task 17 — Shaper and Level Shifter

If the voltage measured in Task 16 is correct but not the current, either the second PA or the shaper and level shifter for the PA is suspect.

Important Ensure that the current limit on the DC supply is 3A. And, when entering the CCTM command *332 **y***, do not specify a value ***y*** higher than that recorded in Task 12. Failure to do so may result in the destruction of the PAs.

1. If the PAF TOP can has already been removed, go to Step 5. If it has not, go to Step 2.
2. Enter the CCTM command *32* to place the radio in receive mode.
3. Remove the PAF TOP can.
4. Enter the CCTM command *33* to place the radio in transmit mode.
5. Enter the CCTM command *332 **y*** (where ***y*** was recorded in Task 12).
6. Check that the voltage at the gate of **Q309** is (see **Figure 11.11**):

gate of Q309: 2 to 5V

7. Enter the CCTM command *32* to place the radio in receive mode.
8. If the voltage is correct, **Q309** is faulty; replace the board and go to "Final Tasks" on page 163. If it is not, go to Step 9.
9. Check the circuitry between pin 8 of **IC301** and the gate of **Q309** (see **Figure 11.6**). If a fault is found, repair it, confirm the removal of the fault, and go to "Final Tasks" on page 163. If the repair failed or Q309 itself is faulty, replace the board and go to "Final Tasks" on page 163.

© Tait Electronics Limited November 2007

Task 18 — Shaping Filter for Power Control

If neither the voltage nor the current measured in Task 16 is correct, then the shaping filter for the power-control circuitry or the CODEC and audio circuitry is suspect.

Important Ensure that the current limit on the DC supply is 3A. And, when entering the CCTM command *332 **y***, do not specify a value ***y*** higher than that recorded in Task 12. Failure to do so may result in the destruction of the PAs.

1. Use the multimeter to measure the voltage at the **FIN2 test point** (see **Figure 11.9** and **Figure 11.10**). The voltage should be:

FIN2 test point: 18 ± 2V (initially)

2. Enter the CCTM command *332 **y*** (where ***y*** was recorded in Task 12).

3. Check that the voltage changes to:

FIN2 test point: 1.1 to 2.7V (after entry of CCTM 332 **y**)

4. Enter the CCTM command *32* to place the radio in receive mode.

5. If the voltage measured above is correct, go to Step 6. If it is not, go to "CODEC and Audio Fault Finding" on page 399.

6. Check **IC301** and the surrounding shaping-filter circuitry (see **Figure 11.9** and **Figure 11.10**). If a fault is found, repair it, confirm the removal of the fault, and go to "Final Tasks" on page 163. If the repair failed, replace the board and go to "Final Tasks" on page 163.

© Tait Electronics Limited November 2007

Task 19 — Biasing of PA Driver —DRV test point

If there is no fault in the biasing of the PAs, investigate the biasing of the PA driver (Q306). First check the DRV test point.

Important Ensure that the current limit on the DC supply is 1 A. And, when entering the CCTM command *304 **z***, do not specify a value ***z*** higher than that recorded in Task 12. Failure to do so may result in the destruction of the PA driver.

1. Note the current reading on the DC power supply. As mentioned in Step 7 of Task 12, the current will be less than 500 mA.
2. Enter the CCTM command *304 **z*** (where ***z*** was recorded in Task 12) to switch on the clamp current.
3. Note the current reading on the DC power supply.
4. Compare the above current readings. The current should increase by an amount approximately equal to the offset given in **Table 11.6**. If it does, go to Task 21. If it does not, go to Step 5.
5. Check as follows that the voltage from the DAC is changing: First enter the CCTM command *304 1* to switch off the bias.
6. Measure the voltage at the **DRV test point** (CDC TX DRV BIAS) (see **Figure 11.9** and **Figure 11.10**). The voltage should be:

DRV test point: < 0.1 V (after entry of CCTM 304 1)

7. Enter the CCTM command *304 **z*** (where ***z*** was recorded in Task 12) to change the DAC value of the clamp current.
8. The voltage should increase to:

DRV test point: 0.8 to 2.5 V (after entry of CCTM 304 **z**)

9. If the voltage does change, go to Task 20. If it does not, go to Step 10.
10. Enter the CCTM command *32* to place the radio in receive mode, and go to "CODEC and Audio Fault Finding" on page 399.

© Tait Electronics Limited November 2007

Task 20 — Biasing of PA Driver— SET PWR test point

If the voltage at the DRV test point is correct, check that at the SET PWR test point.

1. Check the voltage at the **SET PWR test point** (see **Figure 11.9** and **Figure 11.10**):

SET PWR test point: 2 to 5V

2. If the voltage is correct, go to Step 3. If it is not, go to Task 21.

3. If the PAD TOP can has already been removed, go to Step 7. If it has not, go to Step 4.

4. Enter the CCTM command 32 to place the radio in receive mode.

5. Remove the PAD TOP can.

6. Enter the CCTM command 33 to place the radio in transmit mode.

7. Check the voltage on the gate of **Q306** (see **Figure 11.13** (VHF), **Figure 11.14** (UHF), **Figure 11.15** (K5 band)):

gate of Q306: 2 to 5V

8. Enter the CCTM command 32 to place the radio in receive mode.

9. If the voltage is correct, replace **Q306**; confirm the removal of the fault and go to "Final Tasks" on page 163. If it is not, go to Task 23.

© Tait Electronics Limited November 2007

Figure 11.13 PA driver circuitry under the PAD TOP can (VHF)

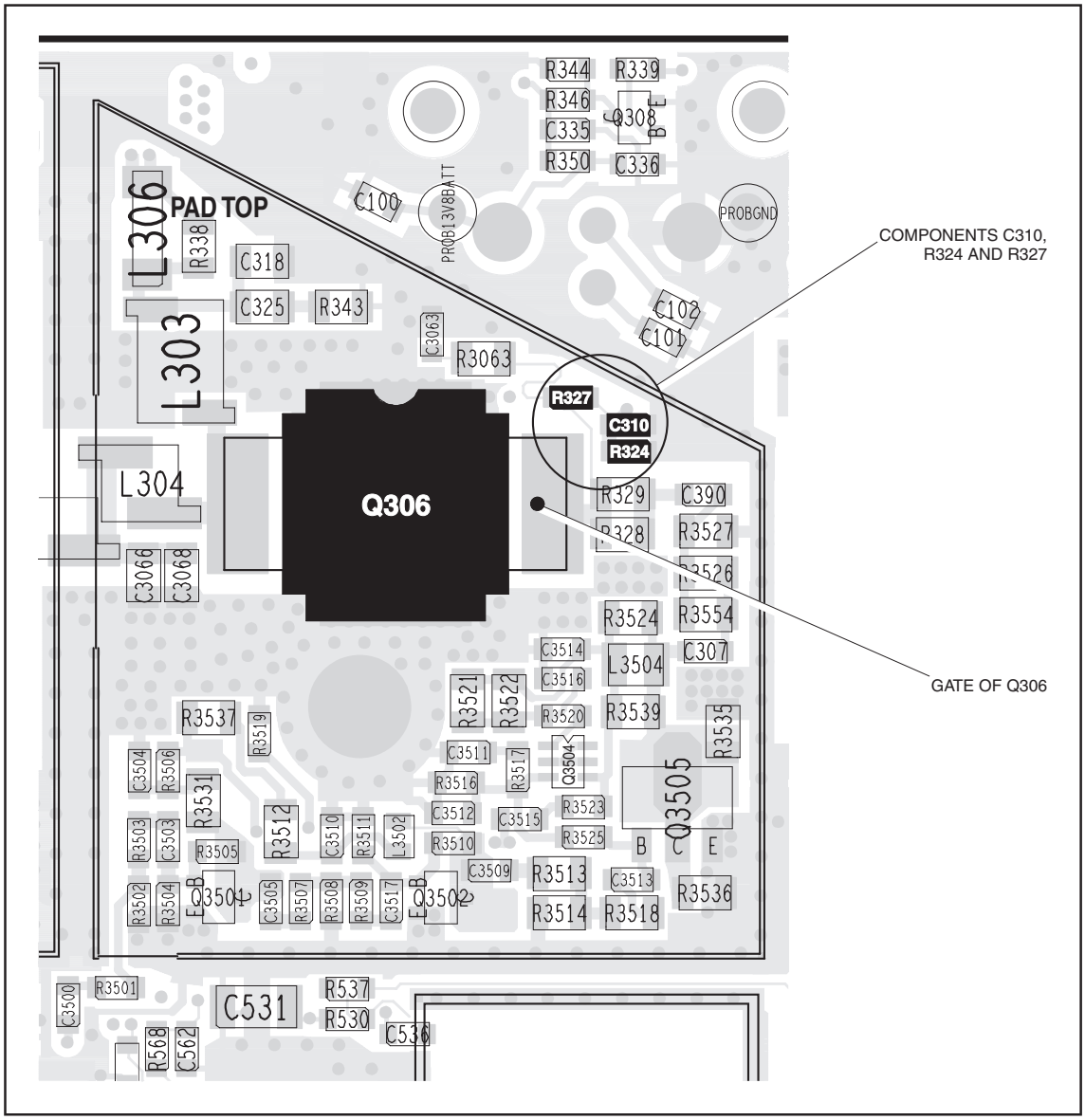

© Tait Electronics Limited November 2007

Figure 11.14 PA driver circuitry under the PAD TOP can (UHF)

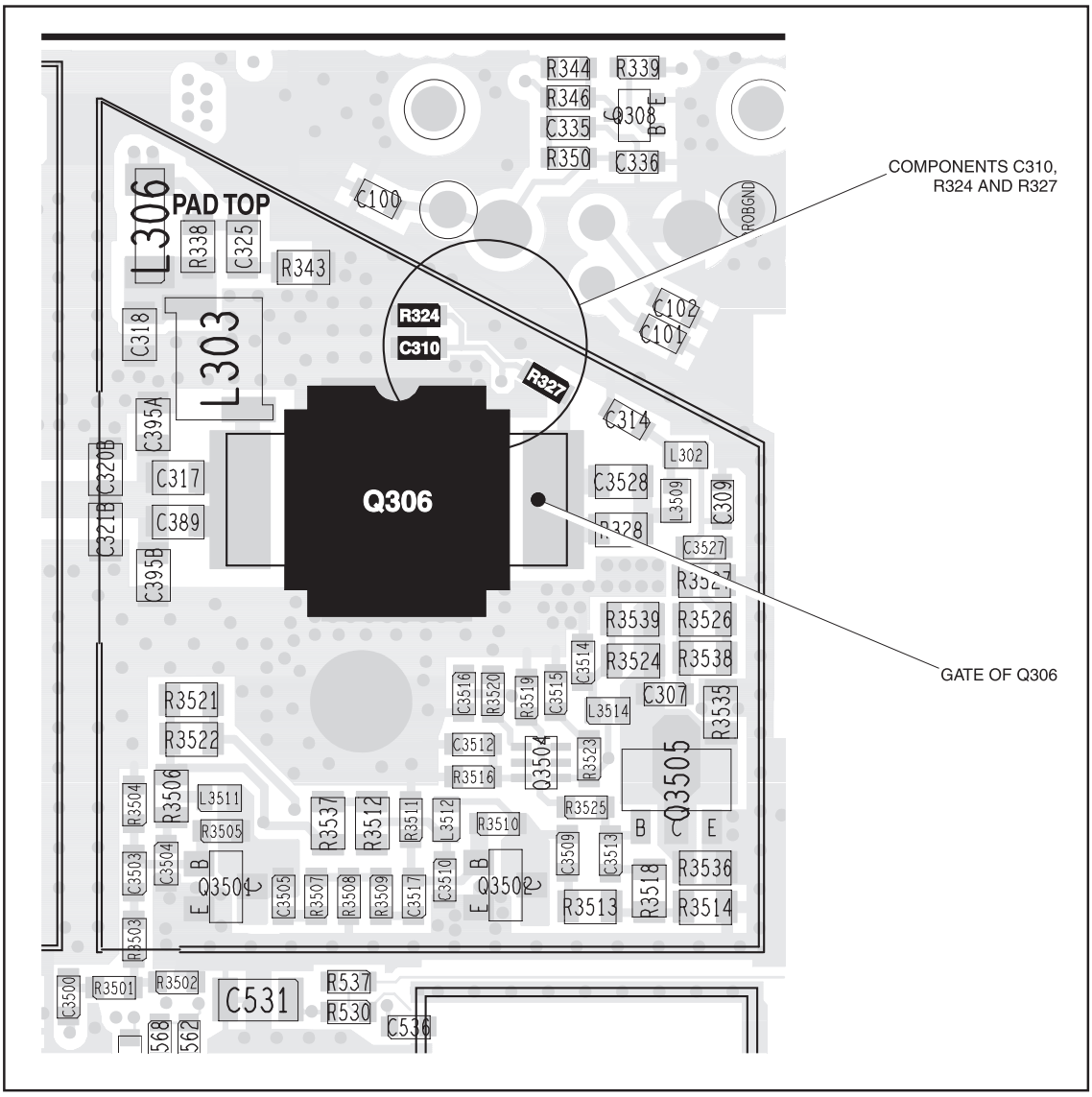

Figure 11.15 PA driver circuitry under the PAD TOP can (K5 band)

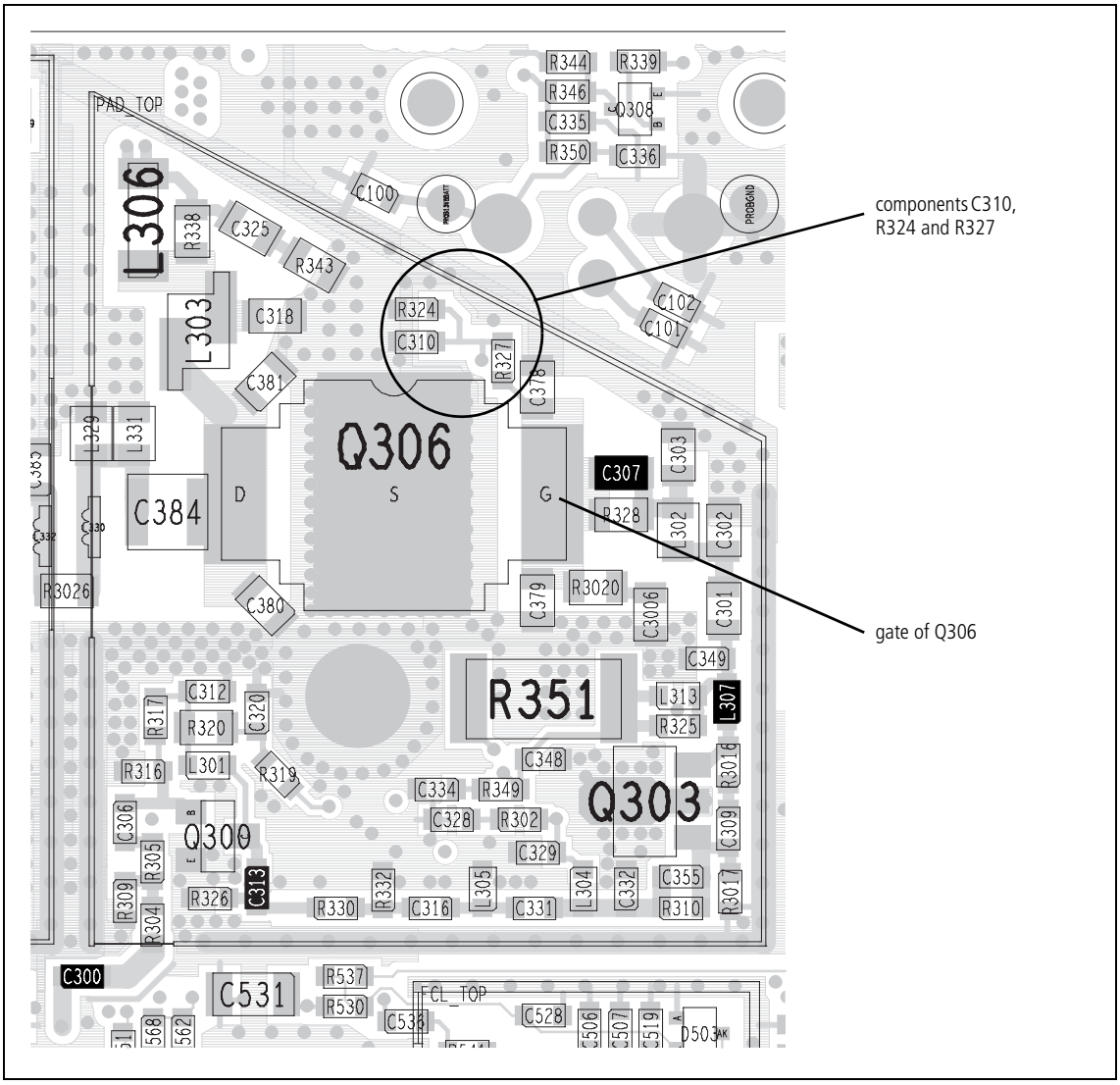

© Tait Electronics Limited November 2007

Task 21 — Check Power Control

Check the power-control circuitry if the clamp current for the PA driver is correct or if the voltage at the SET PWR test point is incorrect.

Important Ensure that the current limit on the DC supply is 3A. And, when entering the CCTM command *304 **z***, do not specify a value ***z*** higher than that recorded in Task 12. Failure to do so may result in the destruction of the PA driver.

1. Enter the CCTM command *304 **z*** (where ***z*** was recorded in Task 12).
2. Note the current reading on the DC power supply.
3. Enter the CCTM command *114 0* to switch off the power.
4. Note the current reading on the DC power supply.
5. Compare the above current readings. The current should decrease by an amount approximately equal to the offset given in **Table 11.6**. If it does, go to Task 26 in "RF Signal Path" on page 316. If it does not, go to Step 6.
6. Check that the voltage from the DAC is changing. Measure the voltage at the **PWR test point** (CDC TX PWR CTL) (see **Figure 11.9** and **Figure 11.10**).
7. Enter the CCTM command *114 1023*. The voltage should increase to:

PWR test point: 2.4 ± 0.1V

8. Enter the CCTM command 32 to place the radio in receive mode.
9. If the voltage at the **PWR test point** increases as required, go to Task 22. If it does not, go to "CODEC and Audio Fault Finding" on page 399.

© Tait Electronics Limited November 2007

Task 22 — Directional Coupler and Buffer Amplifiers

Following the checks in Task 19 to Task 21, locate the fault and repair the circuitry as described in the remaining tasks of the section. In this task any faults in the directional coupler or the buffer amplifiers will be located.

1. Cycle the power.

2. Enter the CCTM command *326 5* to set the transmitter to maximum power. Enter the CCTM command *33* to place the radio in transmit mode.

3. Measure the voltage at pin 9 of **IC303** in the power-control circuit (see **Figure 11.9** and **Figure 11.10**).

4. The above voltage should be as given in **Table 11.7**. If it is, go to Task 24. If it is not, go to Step 5.

5. Check the voltage at the **FWD PWR test point** (pin 5 of **IC303**) and at the **REV PWR test point** (pin 3 of IC303) (see **Figure 11.9** and **Figure 11.10**). Note that the probe impedance may affect these measurements.

6. Enter the CCTM command 32 to place the radio in receive mode.

7. The voltages measured in Step 5 should be as given in **Table 11.7**. If they are, go to Step 10. If the FWD PWR voltage is incorrect, go to Step 8. If the REV PWR voltage is incorrect, go to Step 9.

Table 11.7 Voltages at IC303 at maximum power (70 W for VHF, and 60 W for UHF)

Frequency band	Frequency (MHz)	Voltage (V)		
		Pin 9	Pin 3 (REV PWR)	Pin 5 (FWD PWR)
B1	136 155 174	2.6 ± 0.5 2.9 ± 0.5 3.2 ± 0.5	0.4 ± 0.3 0.4 ± 0.3 0.5 ± 0.3	3.1 ± 0.5 3.4 ± 0.5 3.9 ± 0.5
G2	350 375 400	2.8 ± 0.5 3.0 ± 0.5 3.3 ± 0.5	0.6 ± 0.3 0.6 ± 0.3 0.5 ± 0.3	3.3 ± 0.5 3.7 ± 0.5 3.9 ± 0.5
H5	400 435 470	2.8 ± 0.5 3.0 ± 0.5 3.3 ± 0.5	0.6 ± 0.4 0.6 ± 0.4 0.5 ± 0.4	3.3 ± 0.5 3.7 ± 0.5 3.9 ± 0.5
H7	450 485 520	3.9 ± 0.5 4.1 ± 0.5 4.4 ± 0.5	0.6 ± 0.4 0.8 ± 0.4 0.8 ± 0.4	4.4 ± 0.5 4.6 ± 0.5 5.0 ± 0.5
K5	762 816 870	2.1 ± 0.5 2.1 ± 0.5 2.1 ± 0.5	0.3 ± 0.3 0.3 ± 0.3 0.4 ± 0.3	4.0 ± 0.5 4.5 ± 0.5 4.7 ± 0.5

8. Remove the DIRC TOP can. Check the components of the directional coupler (see **Figure 11.16**) and go to Step 11.

9. Remove the DIRC TOP can. Check **D305** and **R3035** (VHF) or **R383** (UHF and K5 band) (see **Figure 11.16**). If there is no fault, the PIN

© Tait Electronics Limited November 2007

switch or LPF or both are suspect; go to Task 33. If there is a fault, go to Step 11.

10. In the buffer amplifiers, check **R340** (see **Figure 11.9** for VHF, **Figure 11.17** for UHF, and **Figure 11.19** for the K5 band) and **R341** (see **Figure 11.17**, **Figure 11.18**, and **Figure 11.19**).

11. Repair any fault revealed by the above checks. Replace **IC303** if none of the other components is faulty (see **Figure 11.9** and **Figure 11.10**).

12. Confirm the removal of the fault and go to "Final Tasks" on page 163. If the repair failed, replace the board and go to "Final Tasks" on page 163.

Figure 11.16 Circuitry under the DIRC TOP can

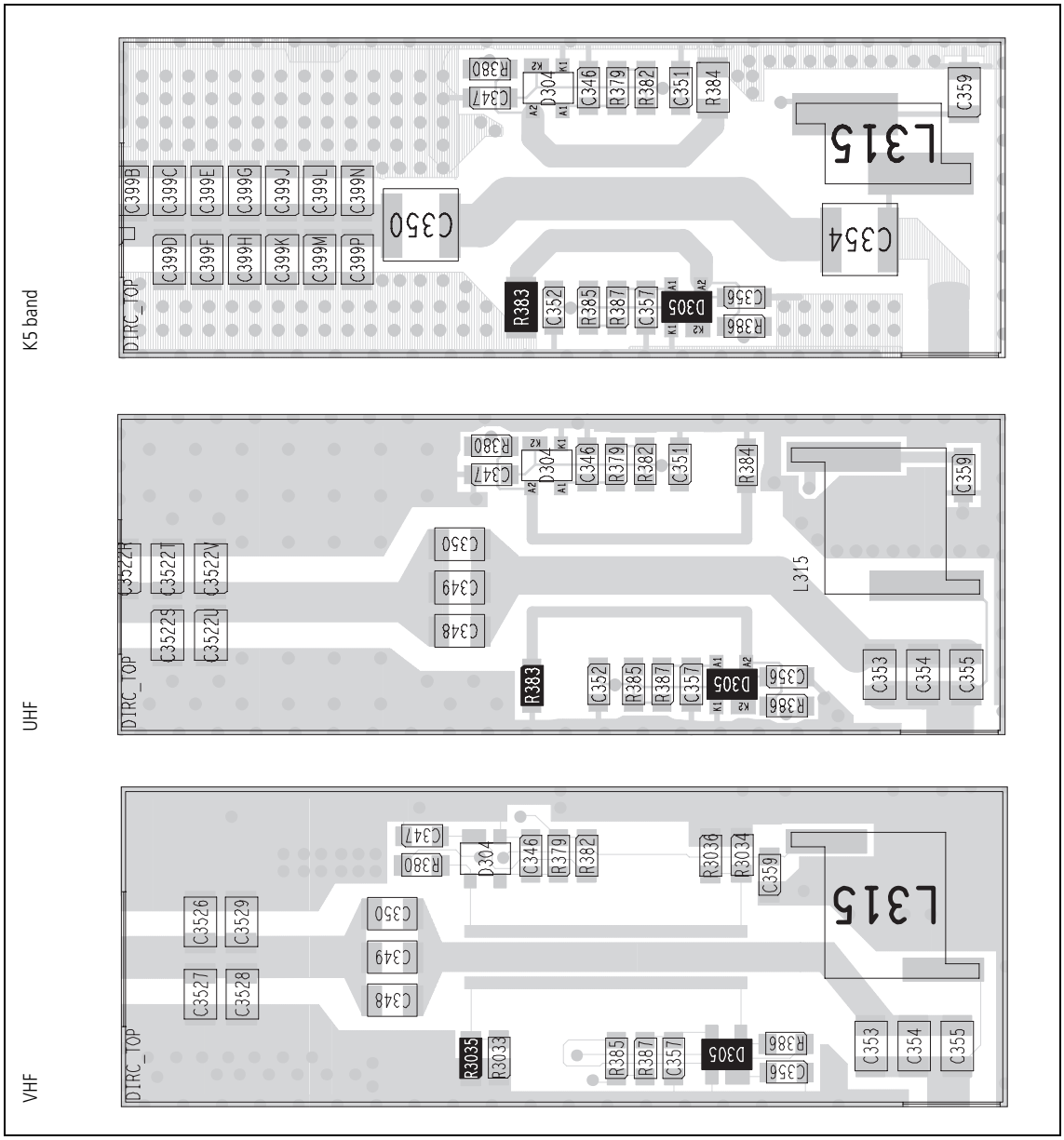

Task 23 — Power Control for PA Driver

In this task any faults in the path between the power-control circuit and the PA driver will be located, as well as any fault with the PA driver.

1. Check for short circuits at the gate of the PA driver **Q306**. Check **R333**, **R336** (see **Figure 11.9** and **Figure 11.10**), **C310**, **R324** and **R327** (see **Figure 11.13** to **Figure 11.15**) between the power-control circuit and Q306.

2. Repair any fault revealed by the checks in Step 1. If none of the above-mentioned components is faulty, replace **Q306** (see **Figure 11.13** to **Figure 11.15**).

3. Confirm the removal of the fault and go to "Final Tasks" on page 163. If the repair failed, replace the board and go to "Final Tasks" on page 163.

Figure 11.17 Components of concern on the bottom-side of the main board (VHF)

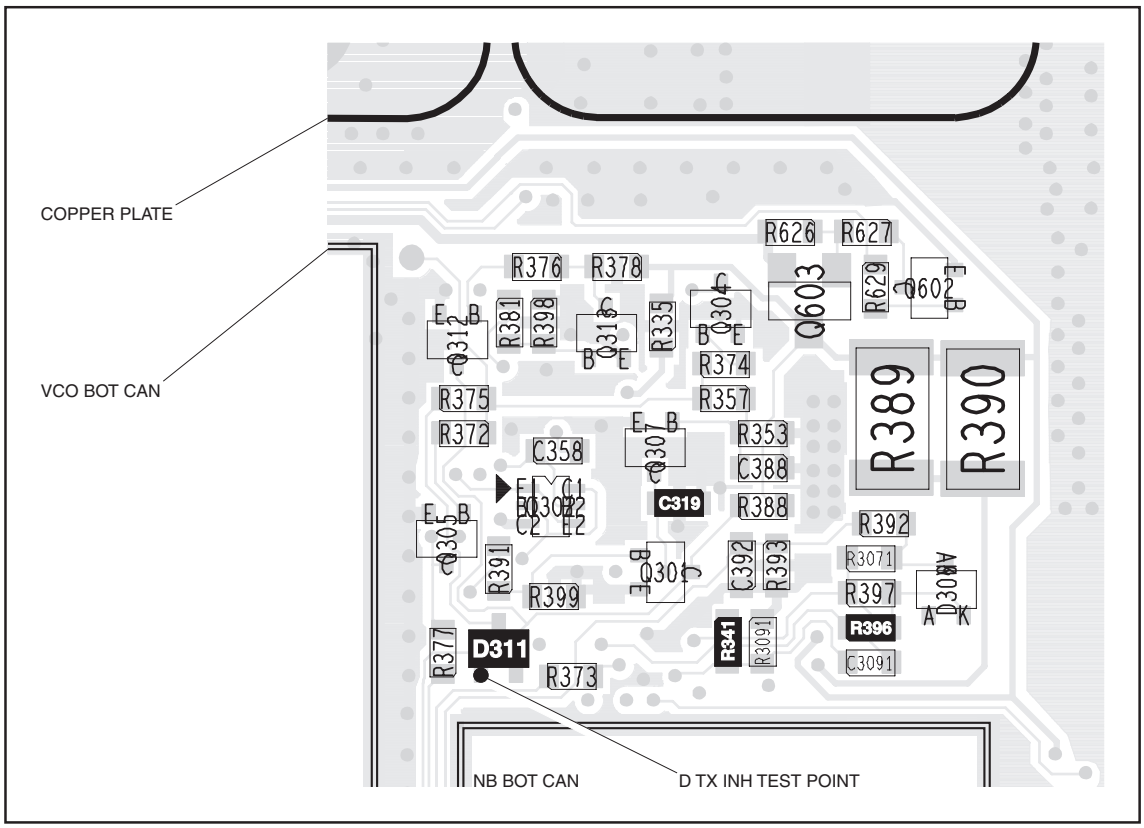

© Tait Electronics Limited November 2007

Figure 11.18 Components of concern on the bottom-side of the main board (UHF)

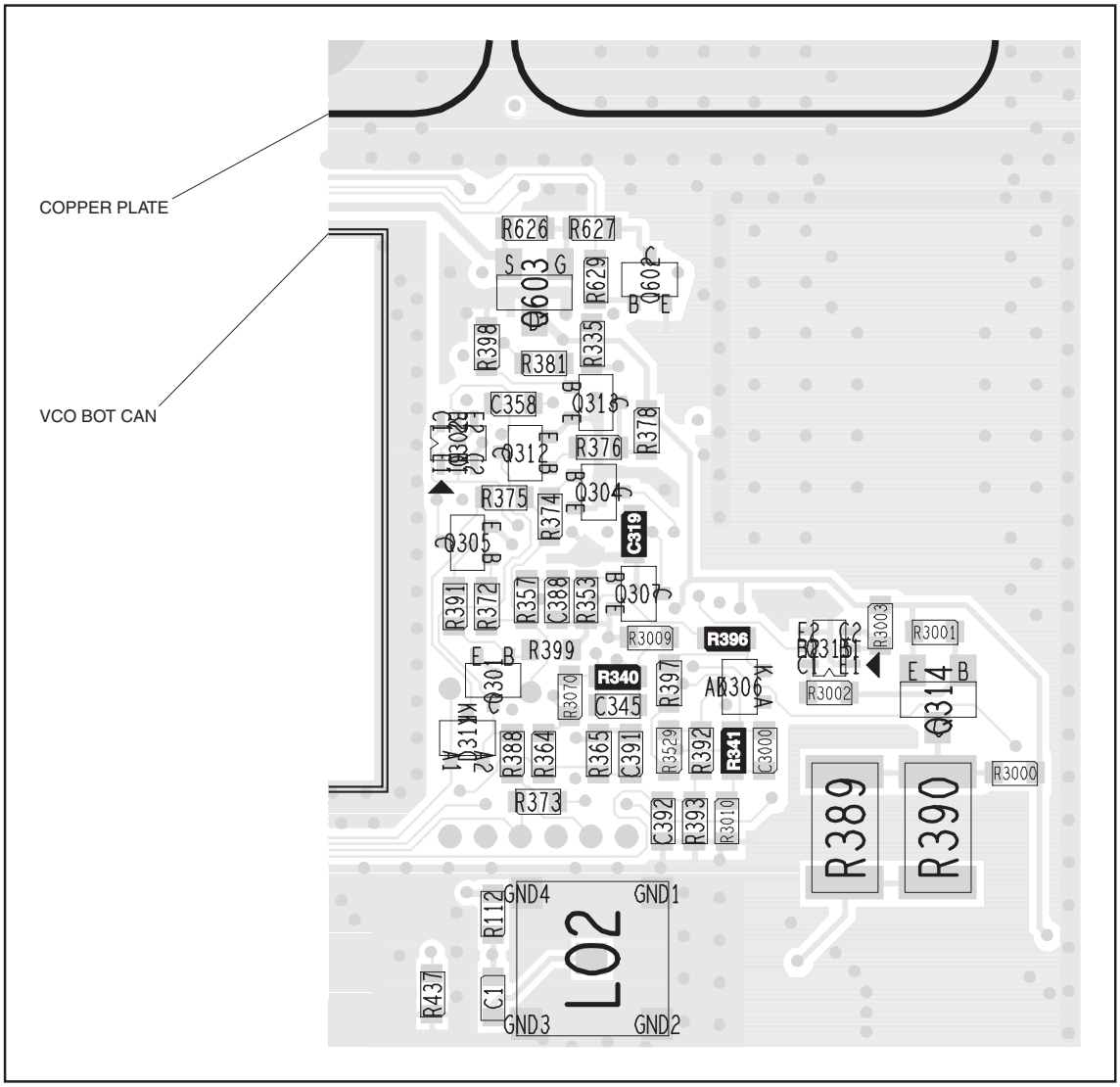

Figure 11.19 Components of concern on the bottom-side of the main board (K5 band)

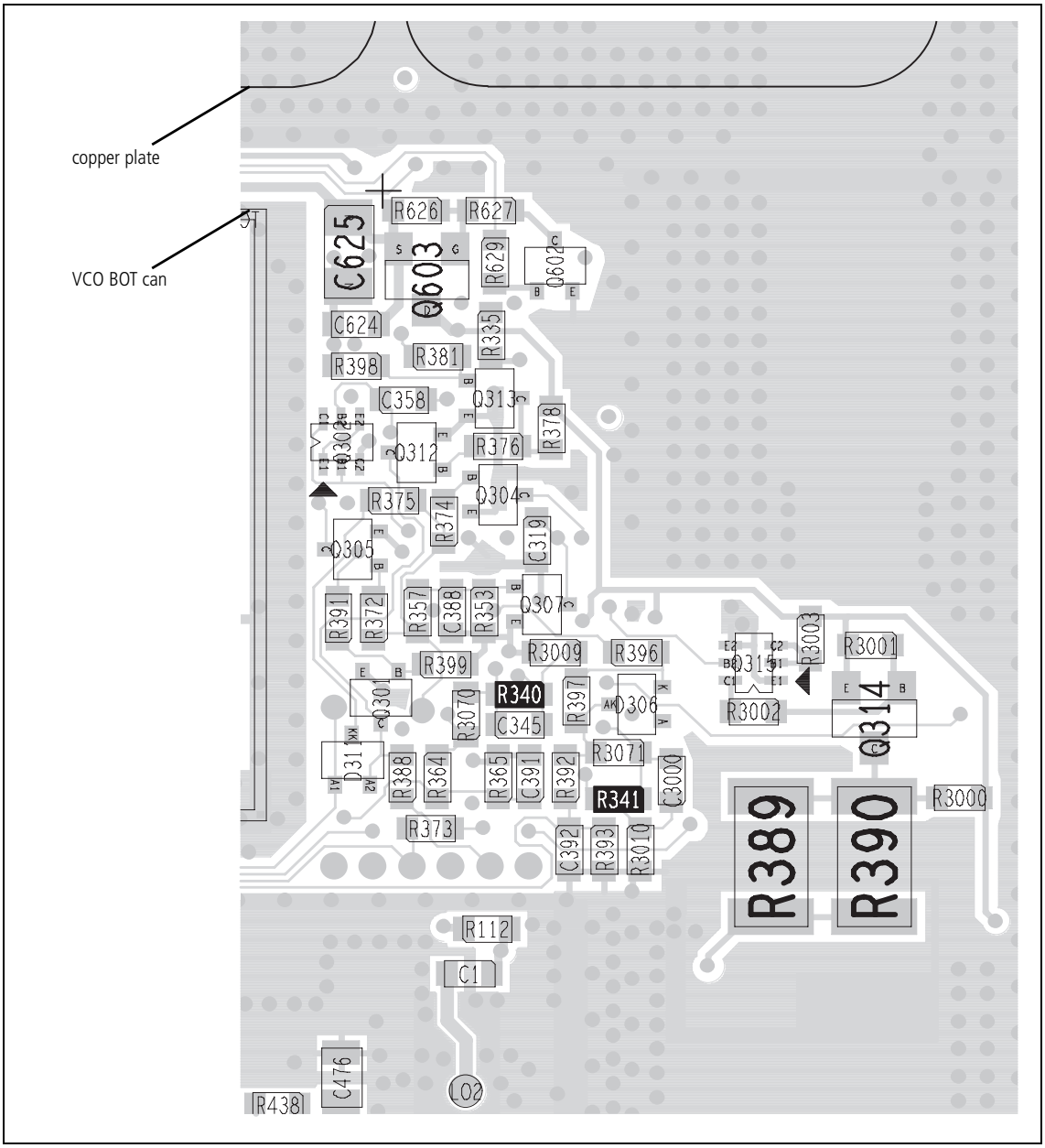

© Tait Electronics Limited November 2007

Task 24 — Power Control

In this task any faults in the power-control circuitry will be located:

1. Measure the voltage at pin 8 of **IC303** (see **Figure 11.9** and **Figure 11.10**) in the power-control circuit. The voltage should be:

pin 8 of IC303: 7.4 ± 0.5V

2. If the voltage is correct, go to Step 3. If it is not, enter the CCTM command *32* and return to Task 23.

3. Measure the voltage at pin 10 of **IC303** in the power-control circuit. The voltage should be:

pin 10 of IC303: 4.8 ± 0.5V

4. If the voltage is correct, go to Step 5. If it is not, go to Task 25.

5. Enter the CCTM command *32* to place the radio in receive mode.

6. Check **C322**, **C324**, **R342**, **R347** (see **Figure 11.9** and **Figure 11.10**) and **R396** (see **Figure 11.17** and **Figure 11.18**) in the power-control circuit. Repair any fault. Replace **IC303** if none of the other components is faulty.

7. Confirm the removal of the fault and go to "Final Tasks" on page 163. If the repair failed, replace the board and go to "Final Tasks" on page 163.

© Tait Electronics Limited November 2007

Task 25 — Shaping Filter

In this task any faults in the shaping-filter circuitry will be located.

1. With the radio still in transmit mode, measure the voltage at pin 1 of **IC301** (see **Figure 11.9** and **Figure 11.10**) in the shaping-filter circuit. The voltage should be:

pin 1 of IC301: 4.8 ± 0.5V

2. Enter the CCTM command *32* to place the radio in receive mode.

3. If the voltage measured in Step 1 is correct, go to Step 4. If it is not, go to Step 5.

4. Check the components **R334** (see **Figure 11.9** and **Figure 11.10**) and **C319** (see **Figure 11.17** and **Figure 11.18**) and go to Step 6.

5. Check the components between the **PWR test point** and pin 1 of **IC301** (see **Figure 11.9** and **Figure 11.10**) and go to Step 6.

6. Repair any fault revealed by the checks in Step 4 and Step 5. Replace **IC301** if none of the other components is faulty.

7. Confirm the removal of the fault and go to "Final Tasks" on page 163. If the repair failed, replace the board and go to "Final Tasks" on page 163.

© Tait Electronics Limited November 2007

11.4 RF Signal Path

Introduction

The RF signal path extends from the output of the frequency synthesizer to the LPF. This section of circuitry will require investigation either following certain checks in "Transmitter RF Power" or if the biasing checks of "Biasing of PA Driver and PAs" reveal no fault. The procedure is divided into ten tasks grouped as follows:

- Task 26 to Task 30: initial RF signal path
- Task 31 and Task 32: directional coupler
- Task 33 and Task 34: PIN switch
- Task 35: LPF

The initial signal path includes the exciter and PA driver. The directional coupler, PIN switch, and LPF make up the final signal path.
The measurement points for diagnosing faults in the signal path are summarized in Figure 11.20.

Figure 11.20 Measurement points for diagnosing faults in the RF signal path

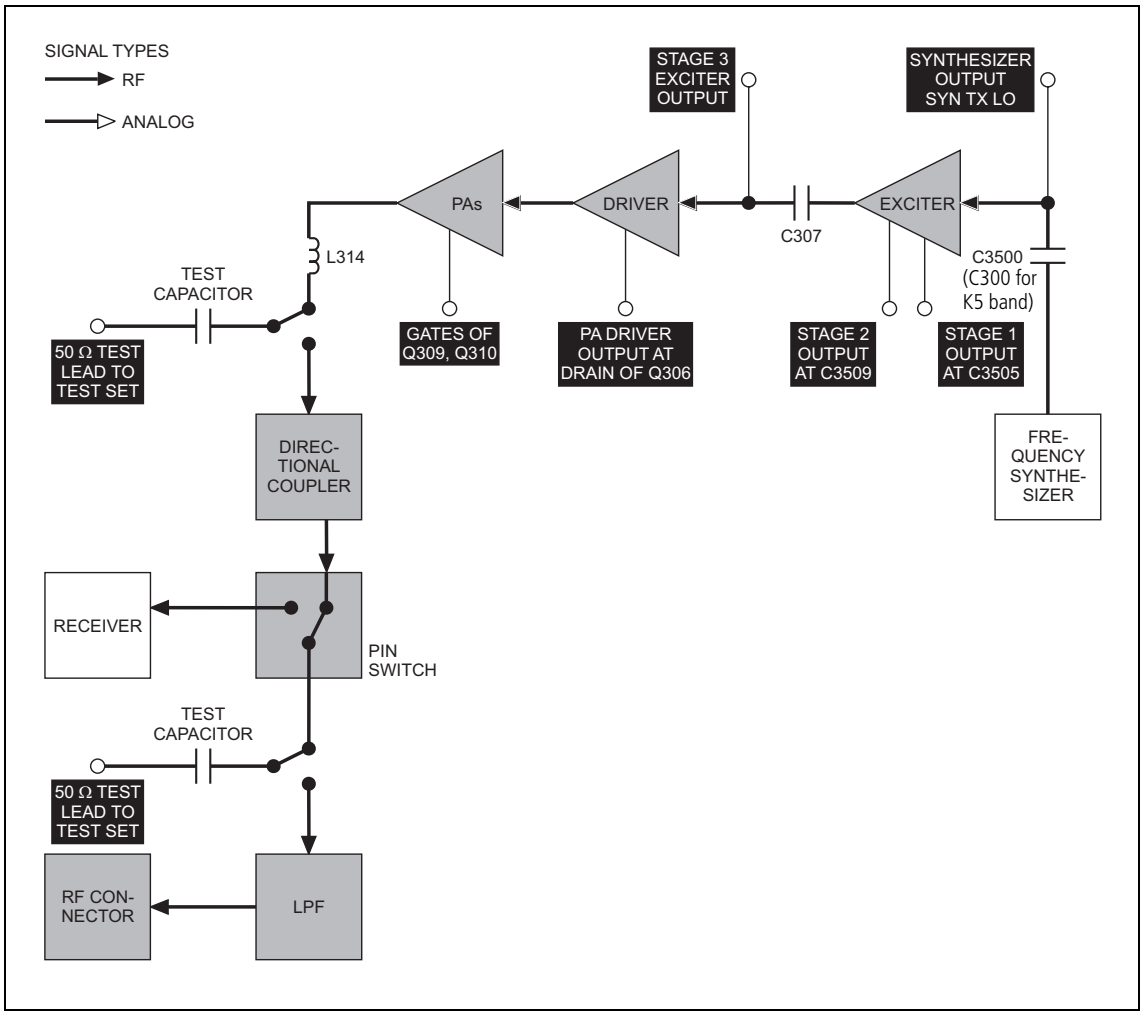

Task 26 — Output of Frequency Synthesizer

The first point to check in the initial RF signal path is the output SYN TX LO from the frequency synthesizer. This signal is input to the exciter at C300.

1. For test purposes select a representative power level and frequency from **Table 11.8** (B1), **Table 11.9** (G2), **Table 11.10** (H5) or **Table 11.11** (H7). (Note that the data for these tables were obtained using an RFP5401A RF probe.)

2. To set the power level, enter the CCTM command *326* ***x***, where ***x*** defines the level. To set the frequency, enter the CCTM command *101* ***x x*** *0*, where ***x*** is the frequency in hertz.

3. Enter the CCTM command *33* to place the radio in transmit mode.

4. Use an RFP5401A RF probe or the equivalent to measure the RF voltage after **C3500** (see **Figure 11.21**). Earth the probe to the FCL TOP can adjacent to the PA driver circuitry. The required voltage should be as given in **Table 11.8** (B1), **Table 11.9** (G2), **Table 11.10** (H5) or **Table 11.11** (H7).

5. Enter the CCTM command *32* to place the radio in receive mode.

6. If the voltage measured above is correct, go to Task 27. If it is not, go to Step 7.

7. Check **C3500** for VHF and UHF (see **Figure 11.21**) or C300 for the K5 band (see **Figure 11.22**). If this component is not faulty, go to "Frequency Synthesizer Fault Finding" on page 185. If this component is faulty, replace it and return to Step 2.

© Tait Electronics Limited November 2007

Figure 11.21 PA driver circuitry under the PAD TOP can (UHF and VHF)

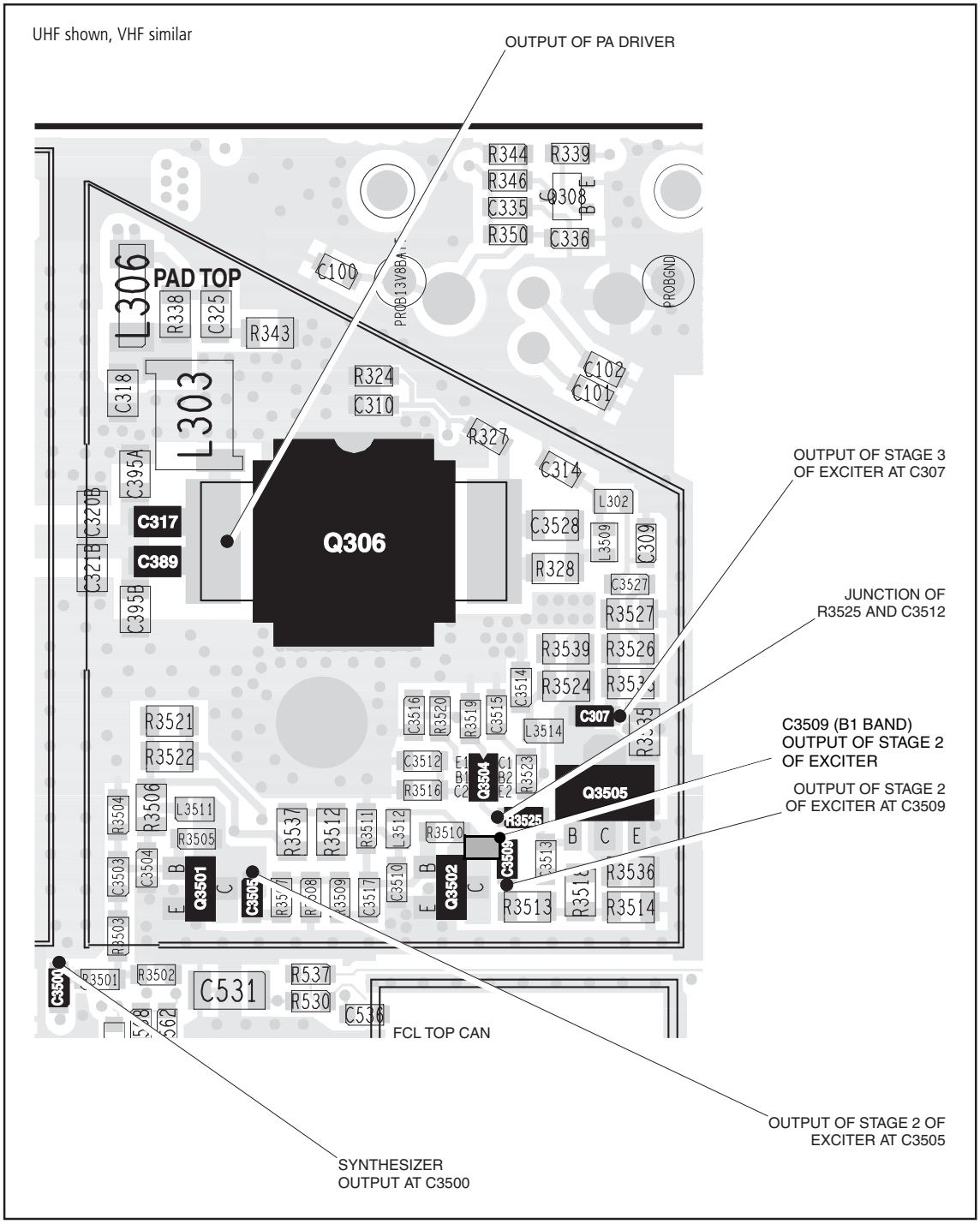

Figure 11.22 PA driver circuitry under the PAD TOP can (K5 band)

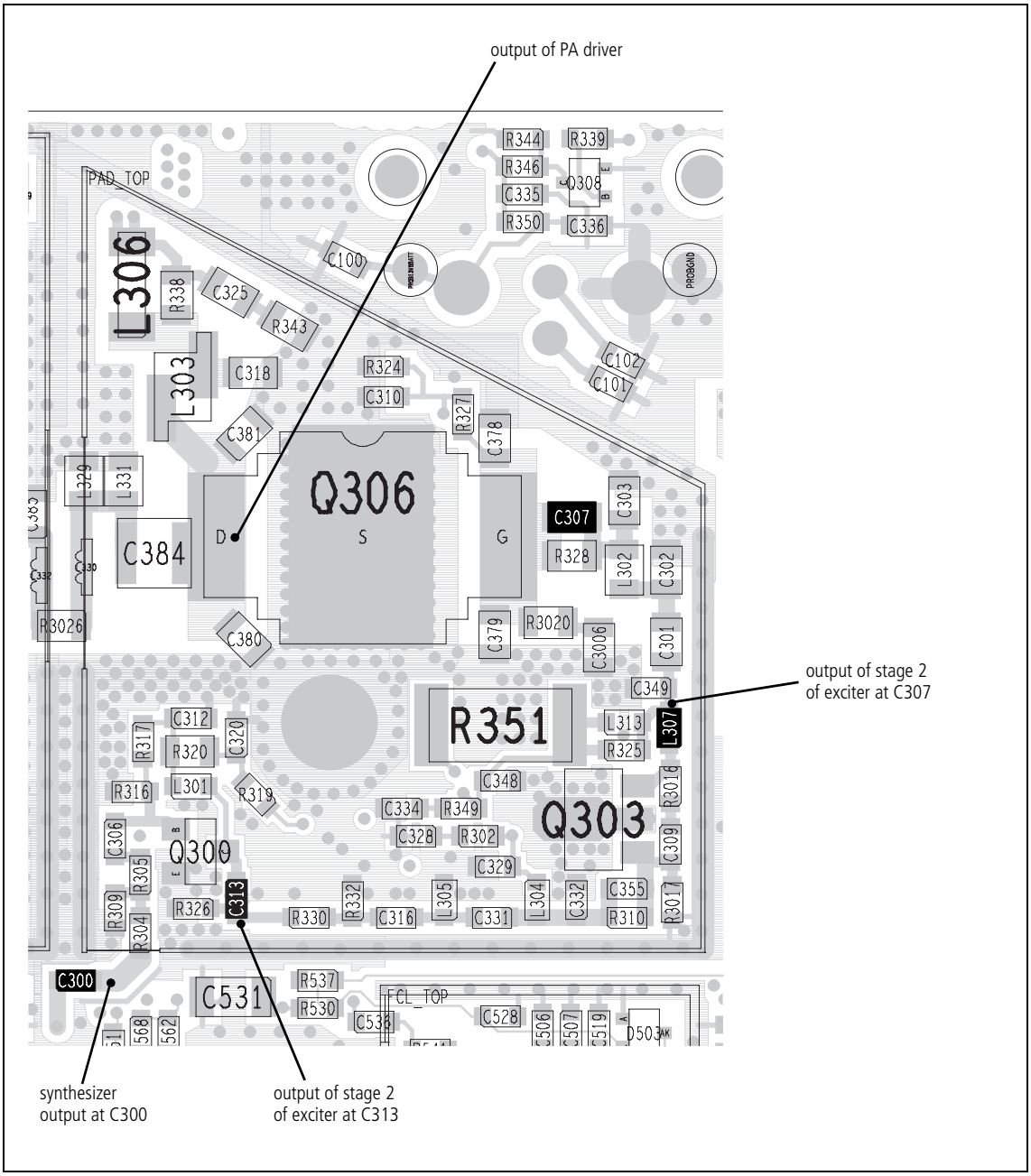

© Tait Electronics Limited November 2007

Table 11.8 RF voltages along the initial RF signal path of the VHF radio (B1 band)

Power level (W)	Frequency (MHz)	RF voltages (V)				
		Synthesizer output	Exciter stage 1	Exciter stage 2	Exciter stage 3	Driver output
10	136 155 174	0.3 ± 0.1 0.3 ± 0.1 0.2 ± 0.1	0.6 ± 0.2 0.6 ± 0.2 0.7 ± 0.2	2.7 ± 0.5 2.2 ± 0.5 1.7 ± 0.5	4.0 ± 0.5 3.7 ± 0.5 4.0 ± 0.5	9.9 ± 0.5 8.4 ± 0.5 8.4 ± 0.5
15	136 155 174	0.3 ± 0.1 0.2 ± 0.1 0.2 ± 0.1	0.6 ± 0.2 0.6 ± 0.2 0.7 ± 0.2	2.7 ± 0.5 2.2 ± 0.5 1.7 ± 0.5	4.0 ± 0.5 3.7 ± 0.5 4.0 ± 0.5	11.8 ± 0.5 10.0 ± 0.5 10.0 ± 0.5
25	136 155 174	0.3 ± 0.1 0.2 ± 0.1 0.2 ± 0.1	0.6 ± 0.2 0.6 ± 0.2 0.7 ± 0.2	2.7 ± 0.5 2.2 ± 0.5 1.7 ± 0.5	4.0 ± 0.5 3.7 ± 0.5 4.0 ± 0.5	14.3 ± 0.5 13.5 ± 0.5 14.7 ± 0.5
50	136 155 174	0.3 ± 0.1 0.2 ± 0.1 0.2 ± 0.1	0.6 ± 0.2 0.6 ± 0.2 0.7 ± 0.2	2.7 ± 0.5 2.2 ± 0.5 1.7 ± 0.5	4.0 ± 0.5 3.7 ± 0.5 4.0 ± 0.5	15.6 ± 0.5 15.0 ± 0.5 15.6 ± 0.5
70	136 155 174	0.3 ± 0.1 0.2 ± 0.1 0.3 ± 0.1	0.6 ± 0.2 0.6 ± 0.2 0.7 ± 0.2	2.7 ± 0.5 2.2 ± 0.5 1.7 ± 0.5	4.0 ± 0.5 3.7 ± 0.5 4.0 ± 0.5	24.5 ± 0.5 29.0 ± 0.5 22.0 ± 0.5

Table 11.9 RF voltages along the initial RF signal path of the UHF radio (G2 band)

Power level (W)	Frequency (MHz)	RF voltages (V)				
		Synthesizer output	Exciter stage 1	Exciter stage 2	Exciter stage 3	Driver output
10	350 375 400	0.3 ± 0.1 0.4 ± 0.1 0.3 ± 0.1	1.2 ± 0.2 2.4 ± 0.2 1.1 ± 0.2	4.2 ± 0.5 2.7 ± 0.5 2.1 ± 0.5	9.2 ± 0.5 6.8 ± 0.5 4.8 ± 0.5	3.0 ± 0.5 2.9 ± 0.5 2.0 ± 0.5
15	350 375 400	0.3 ± 0.1 0.3 ± 0.1 0.3 ± 0.1	1.2 ± 0.2 2.4 ± 0.2 1.1 ± 0.2	4.2 ± 0.5 2.7 ± 0.5 2.1 ± 0.5	9.2 ± 0.5 6.8 ± 0.5 4.8 ± 0.5	4.1 ± 0.5 3.8 ± 0.5 2.5 ± 0.5
20	350 375 400	0.4 ± 0.1 0.3 ± 0.1 0.3 ± 0.1	1.2 ± 0.2 2.4 ± 0.2 1.1 ± 0.2	4.2 ± 0.5 2.7 ± 0.5 2.1 ± 0.5	9.2 ± 0.5 6.8 ± 0.5 4.8 ± 0.5	4.8 ± 0.5 4.2 ± 0.5 3.0 ± 0.5
40	350 375 400	0.3 ± 0.1 0.3 ± 0.1 0.3 ± 0.1	1.2 ± 0.2 2.4 ± 0.2 1.1 ± 0.2	4.2 ± 0.5 2.7 ± 0.5 2.1 ± 0.5	9.2 ± 0.5 6.8 ± 0.5 4.8 ± 0.5	4.6 ± 0.5 4.0 ± 0.5 2.9 ± 0.5
60	350 375 400	0.3 ± 0.1 0.3 ± 0.1 0.3 ± 0.1	1.2 ± 0.2 2.4 ± 0.2 1.1 ± 0.2	4.2 ± 0.5 2.7 ± 0.5 2.1 ± 0.5	9.2 ± 0.5 6.8 ± 0.5 4.8 ± 0.5	8.1 ± 0.5 7.3 ± 0.5 5.3 ± 0.5

© Tait Electronics Limited November 2007

Table 11.10 RF voltages along the initial RF signal path of the UHF radio (H5 band)

Power level (W)	Frequency (MHz)	RF voltages (V)				
		Synthesizer output	Exciter stage 1	Exciter stage 2	Exciter stage 3	Driver output
10	400 435 470	0.3 ± 0.1 0.4 ± 0.1 0.3 ± 0.1	1.2 ± 0.2 2.4 ± 0.2 1.1 ± 0.2	4.2 ± 0.5 2.7 ± 0.5 2.1 ± 0.5	9.2 ± 0.5 6.8 ± 0.5 4.8 ± 0.5	3.0 ± 0.5 2.9 ± 0.5 2.0 ± 0.5
15	400 435 470	0.3 ± 0.1 0.3 ± 0.1 0.3 ± 0.1	1.2 ± 0.2 2.4 ± 0.2 1.1 ± 0.2	4.2 ± 0.5 2.7 ± 0.5 2.1 ± 0.5	9.2 ± 0.5 6.8 ± 0.5 4.8 ± 0.5	4.1 ± 0.5 3.8 ± 0.5 2.5 ± 0.5
20	400 435 470	0.4 ± 0.1 0.3 ± 0.1 0.3 ± 0.1	1.2 ± 0.2 2.4 ± 0.2 1.1 ± 0.2	4.2 ± 0.5 2.7 ± 0.5 2.1 ± 0.5	9.2 ± 0.5 6.8 ± 0.5 4.8 ± 0.5	4.8 ± 0.5 4.2 ± 0.5 3.0 ± 0.5
40	400 435 470	0.3 ± 0.1 0.3 ± 0.1 0.3 ± 0.1	1.2 ± 0.2 2.4 ± 0.2 1.1 ± 0.2	4.2 ± 0.5 2.7 ± 0.5 2.1 ± 0.5	9.2 ± 0.5 6.8 ± 0.5 4.8 ± 0.5	4.6 ± 0.5 4.0 ± 0.5 2.9 ± 0.5
60	400 435 470	0.3 ± 0.1 0.3 ± 0.1 0.3 ± 0.1	1.2 ± 0.2 2.4 ± 0.2 1.1 ± 0.2	4.2 ± 0.5 2.7 ± 0.5 2.1 ± 0.5	9.2 ± 0.5 6.8 ± 0.5 4.8 ± 0.5	8.1 ± 0.5 7.3 ± 0.5 5.3 ± 0.5

Table 11.11 RF voltages along the initial RF signal path of the UHF radio (H7 band)

Power level (W)	Frequency (MHz)	RF voltages (V)				
		Synthesizer output	Exciter stage 1	Exciter stage 2	Exciter stage 3	Driver output
10	450 485 520	0.2 ± 0.1 0.2 ± 0.1 0.2 ± 0.1	1.1 ± 0.2 1.0 ± 0.2 1.2 ± 0.2	2.2 ± 0.5 1.9 ± 0.5 0.9 ± 0.5	5.7 ± 0.5 3.4 ± 0.5 2.4 ± 0.5	2.5 ± 0.5 2.0 ± 0.5 0.9 ± 0.5
15	450 485 520	0.2 ± 0.1 0.2 ± 0.1 0.2 ± 0.1	1.1 ± 0.2 1.0 ± 0.2 1.2 ± 0.2	2.2 ± 0.5 1.9 ± 0.5 0.9 ± 0.5	5.7 ± 0.5 3.4 ± 0.5 2.4 ± 0.5	3.1 ± 0.5 2.4 ± 0.5 1.1 ± 0.5
20	450 485 520	0.2 ± 0.1 0.2 ± 0.1 0.2 ± 0.1	1.1 ± 0.2 1.0 ± 0.2 1.2 ± 0.2	2.2 ± 0.5 1.9 ± 0.5 0.9 ± 0.5	5.7 ± 0.5 3.4 ± 0.5 2.4 ± 0.5	3.6 ± 0.5 2.9 ± 0.5 1.4 ± 0.5
40	450 485 520	0.2 ± 0.1 0.1 ± 0.1 0.1 ± 0.1	1.1 ± 0.2 1.0 ± 0.2 1.2 ± 0.2	2.2 ± 0.5 1.9 ± 0.5 0.9 ± 0.5	5.7 ± 0.5 3.4 ± 0.5 2.4 ± 0.5	3.8 ± 0.5 3.2 ± 0.5 1.5 ± 0.5
60	450 485 520	0.2 ± 0.1 0.2 ± 0.1 0.2 ± 0.1	1.1 ± 0.2 1.0 ± 0.2 1.2 ± 0.2	2.2 ± 0.5 1.9 ± 0.5 0.9 ± 0.5	5.7 ± 0.5 3.4 ± 0.5 2.4 ± 0.5	7.8 ± 0.5 4.8 ± 0.5 2.8 ± 0.5

© Tait Electronics Limited November 2007

Table 11.12 RF voltages along the initial RF signal path of the radio (K5 band)

Power level (W)	Frequency (MHz)	RF voltages (V)			
		Synthesizer output	Exciter stage 1	Exciter stage 2	Driver output
10	450 485 520	0.2 ± 0.1 0.2 ± 0.1 0.2 ± 0.1	1.1 ± 0.2 1.0 ± 0.2 1.2 ± 0.2	2.2 ± 0.5 1.9 ± 0.5 0.9 ± 0.5	2.5 ± 0.5 2.0 ± 0.5 0.9 ± 0.5
15	450 485 520	0.2 ± 0.1 0.2 ± 0.1 0.2 ± 0.1	1.1 ± 0.2 1.0 ± 0.2 1.2 ± 0.2	2.2 ± 0.5 1.9 ± 0.5 0.9 ± 0.5	3.1 ± 0.5 2.4 ± 0.5 1.1 ± 0.5
20	450 485 520	0.2 ± 0.1 0.2 ± 0.1 0.2 ± 0.1	1.1 ± 0.2 1.0 ± 0.2 1.2 ± 0.2	2.2 ± 0.5 1.9 ± 0.5 0.9 ± 0.5	3.6 ± 0.5 2.9 ± 0.5 1.4 ± 0.5
40	450 485 520	0.2 ± 0.1 0.1 ± 0.1 0.1 ± 0.1	1.1 ± 0.2 1.0 ± 0.2 1.2 ± 0.2	2.2 ± 0.5 1.9 ± 0.5 0.9 ± 0.5	3.8 ± 0.5 3.2 ± 0.5 1.5 ± 0.5
60	450 485 520	0.2 ± 0.1 0.2 ± 0.1 0.2 ± 0.1	1.1 ± 0.2 1.0 ± 0.2 1.2 ± 0.2	2.2 ± 0.5 1.9 ± 0.5 0.9 ± 0.5	7.8 ± 0.5 4.8 ± 0.5 2.8 ± 0.5

© Tait Electronics Limited November 2007

Task 27 — Output of First Stage of Exciter

If the synthesizer output is correct, check the output at C3505 for the VHF/UHF bands or C313 for the K5 band of the first stage of the exciter circuit.

1. If not already done, remove the PAD TOP can.
2. Enter the CCTM command *326 **x***, where ***x*** defines the power level selected in Task 26.
3. Enter the CCTM command *101 **x** **x** 0*, where ***x*** is the frequency selected in Task 26.
4. Enter the CCTM command *33* to place the radio in transmit mode.
5. Measure the RF voltage after **C3505** for the VHF/UHF bands (see **Figure 11.21**) or **Q300** for the K5 band (see Figure 11.22). (Use an RFP5401A RF probe or the equivalent.) The required voltage should be as given in **Table 11.8** (B1), **Table 11.9** (G2), **Table 11.10** (H5), **Table 11.11** (H7), or **Table 11.12** (K5).
6. Enter the CCTM command *32* to place the radio in receive mode.
7. If the voltage measured above is correct, go to Task 29. If it is not, go to Step 8.
8. Check the components around **Q3501** for the VHF/UHF bands (see **Figure 11.21**) or **Q300** for the K5 band (see Figure 11.22).
9. Repair any fault revealed by the above checks. Replace **Q3501** for the VHF/UHF bands (see **Figure 11.21**) or **Q300** for the K5 band (see Figure 11.22) if none of the other components is faulty.
10. Confirm the removal of the fault and go to "Final Tasks" on page 163. If the repair failed, replace the board and go to "Final Tasks" on page 163.

© Tait Electronics Limited November 2007

Task 28 — Output of Second Stage of Exciter

If the output of the first stage of the exciter circuit is correct, check that of the second stage at C3509 for the VHF/UHF bands or L307 for the K5 band:

1. With the radio still in transmit mode, measure the RF voltage after **C3509** for the VHF/UHF bands (see **Figure 11.21**) or L307 for the K5 band (see Figure 11.22). (Use an RFP5401A RF probe or the equivalent.) The required voltage should be as given in **Table 11.8** (B1), **Table 11.9** (G2), **Table 11.10** (H5), **Table 11.11** (H7), or **Table 11.12** (K5).

2. If the voltage is correct, go to Task 30. If it is not, go to Step 3.

3. Enter the CCTM command *32* to place the radio in receive mode.

4. Check the components around **Q3502** for the VHF/UHF bands (see **Figure 11.21**) or Q303 for the K5 band (see Figure 11.22).

5. For the K5 band: Since the second stage of the exciter is also the final stage, check the voltage across resistor R351:

Voltage across R351: 1.0V to 4.2V

   Also check that the resistance of the resistor is 15Ω.

6. Repair any fault revealed by the above checks. **Q3502** for the VHF/UHF bands (see **Figure 11.21**) or Q303 for the K5 band (see Figure 11.22) if none of the other components is faulty.

7. Confirm the removal of the fault and go to "Final Tasks" on page 163. If the repair failed, replace the board and go to "Final Tasks" on page 163.

© Tait Electronics Limited November 2007

Task 29 — Output of Third Stage of Exciter (VHF/UHF bands only)

If the output of the second stage of the exciter circuit is correct, check that of the third and final stage at C307.

1. With the radio still in transmit mode, measure the RF voltage after **C307** (see **Figure 11.21**). (Use an RFP5401A RF probe or the equivalent.) The required voltage should be as given in **Table 11.8** (B1), **Table 11.9** (G2), **Table 11.10** (H5) or **Table 11.11** (H7).

2. If the voltage is correct, go to Task 30. If it is not, go toStep 3.

3. With the radio still in transmit mode, measure the RF voltage at the junction of **R3525** and **C3512** (see **Figure 11.21**). The voltage should be:

junction of R3525 and C3512: 1.3 ± 0.2V (VHF) 1.8 ± 0.2V (UHF)

4. Enter the CCTM command *32* to place the radio in receive mode.

5. If the voltage measured in Step 3 is correct, go to Step 7. If it is not, go to Step 6.

6. Check the components around **Q3504** (see **Figure 11.21**). Repair any fault. Replace Q3504 if none of the other components is faulty. Conclude with Step 8.

7. Check the components around **Q3505** (see **Figure 11.21**). Repair any fault. Replace Q3505 if none of the other components is faulty.

8. Confirm the removal of the fault and go to "Final Tasks" on page 163. If the repair failed, replace the board and go to "Final Tasks" on page 163.

© Tait Electronics Limited November 2007

Task 30 — Output of PA Driver

If the exciter output is correct, check the output of the PA driver at the drain of Q306. If necessary, also check the signal at the gates of the PAs Q309 and Q310. This is the last point in the initial RF signal path.

1. With the radio still in transmit mode, measure the RF voltage at the drain of **Q306** (B1) or after **C317** and **C389** (other bands). See **Figure 11.21** and use an RFP5401A RF probe or the equivalent.) The required voltage should be as given in **Table 11.8** (B1), **Table 11.9** (G2), **Table 11.10** (H5), **Table 11.11** (H7), or **Table 11.12** (K5).

2. Enter the CCTM command *32* to place the radio in receive mode.

3. If the voltage measured above is correct, go to Step 7. If it is not, go to Step 4.

4. Check the components between **C307** and **Q306** (see **Figure 11.21** for VHF and UHF, and **Figure 11.21** for the K5 band).

5. If the above checks reveal a fault, go to Step 6. If they do not, go to Task 12 in "Biasing of PA Driver and PAs" on page 290.

6. Repair the fault. Confirm the removal of the fault and go to "Final Tasks" on page 163. If the repair failed, replace the board and go to "Final Tasks" on page 163.

7. If not already done, remove the PAF TOP can.

8. Enter the CCTM command *326 5* to set the power level to the maximum, and then the command *33* to place the radio in transmit mode.

9. Measure the RF voltage at the gates of the PAs **Q309** and **Q310** (see **Figure 11.23** to **Figure 11.25**).

10. Enter the CCTM command *32* to place the radio in receive mode.

11. If an RF voltage is present, there is no fault in the initial RF signal path; go to Task 31. If there is no RF voltage, go to Step 12.

12. Check the components of the interstage matching circuitry between the PA driver **Q306** and the gates of the PAs **Q309** and **Q310** (see **Figure 11.23** to **Figure 11.25**).

13. If a fault is found, repair it, confirm the removal of the fault, and go to "Final Tasks" on page 163. If the repair failed or the fault could not be found, replace the board and go to "Final Tasks" on page 163.

© Tait Electronics Limited November 2007

Figure 11.23 Components of the interstage matching circuitry between the PA driver Q306 and the PAs Q309 and Q310 (VHF)

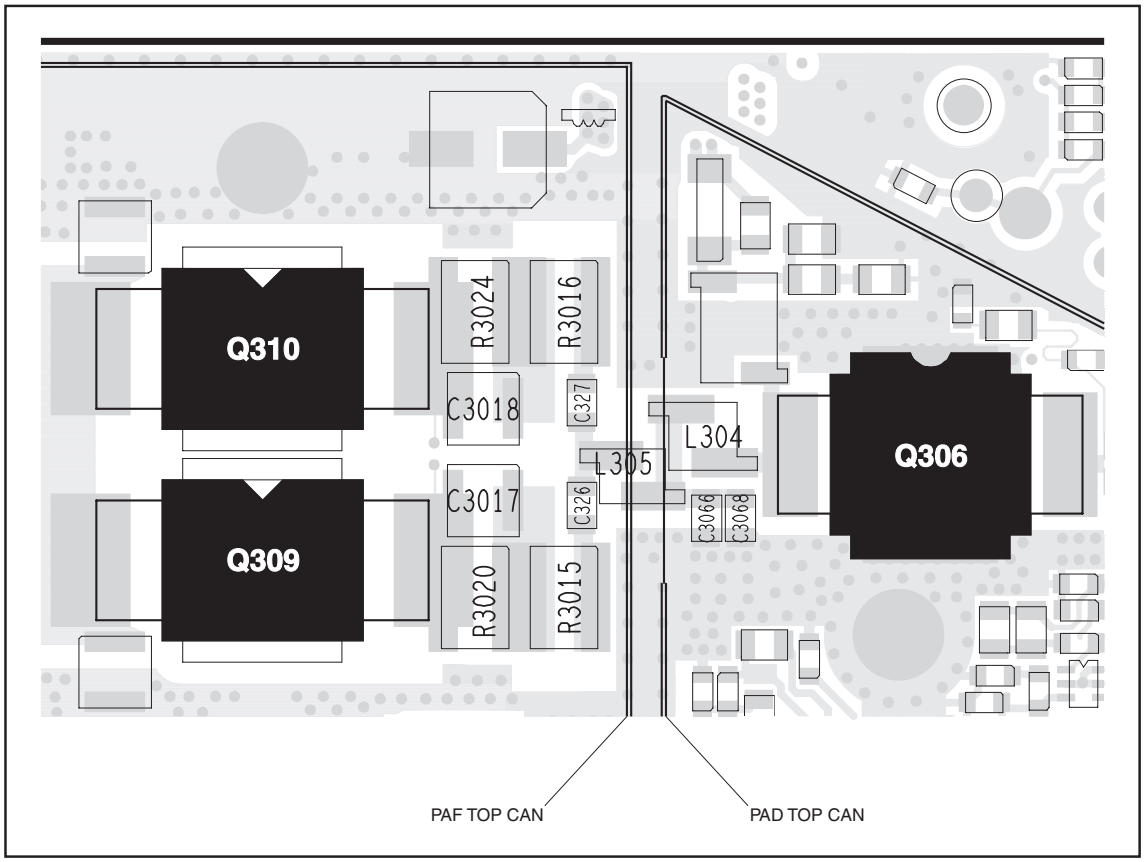

© Tait Electronics Limited November 2007

Figure 11.24 Components of the interstage matching circuitry between the PA driver Q306 and the PAs Q309 and Q310 (UHF)

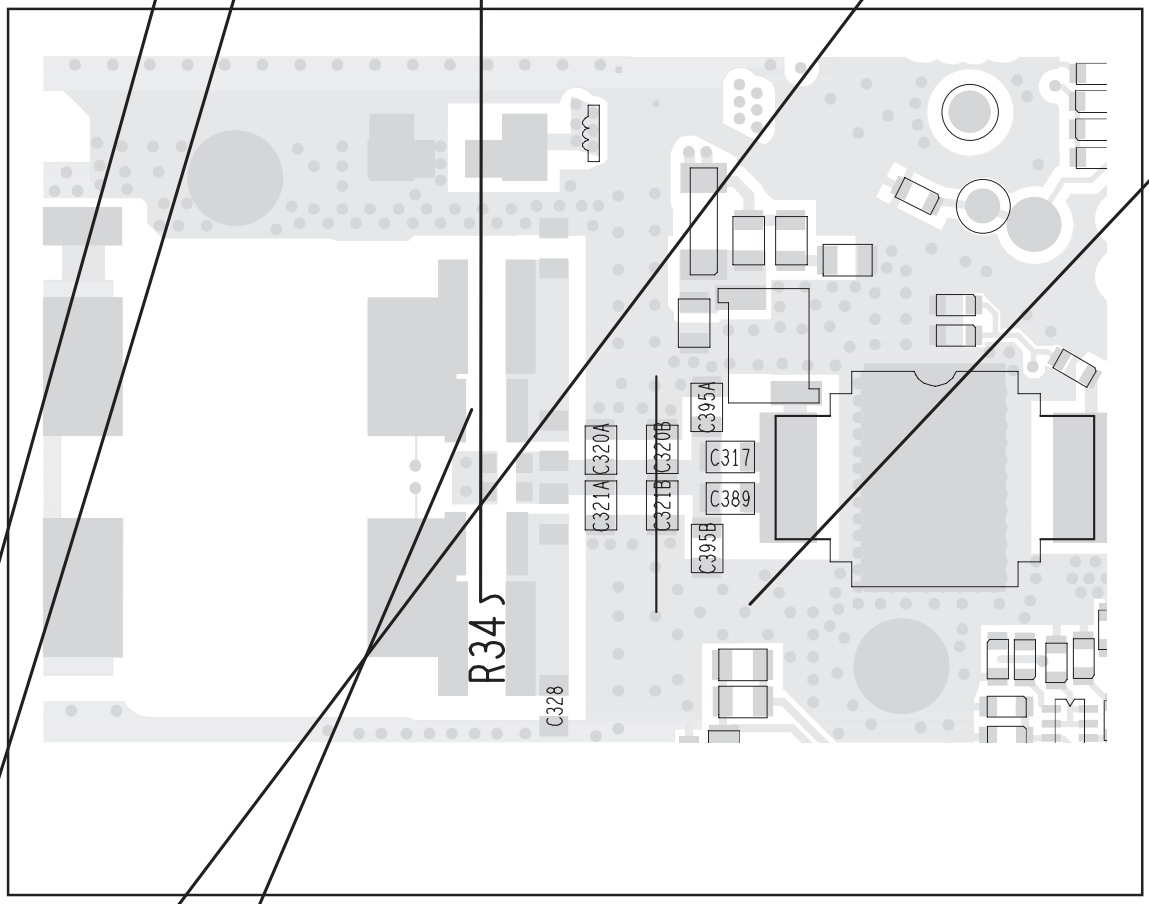

© Tait Electronics Limited November 2007

4. If the slide locks are closed, open them by inserting the slide lock key into the keyhole. Rotate the key 90° (it will slip into a detent), and pull.

   Two slide lock keys are supplied so that you can either use them both at once, or so that you can keep one as a spare.

5. Place the radio over the security bracket base so that the feet of the mounting rails fit securely into the base.

6. Close the slide locks by pressing them into the base. You should hear an audible click as the internal spring lock mechanism engages.

Warning!! **For continued safe operation, replace and do not re-use Security Bracket once it has been involved in a crash greater than 50km/h.**

24.3 Removing a Radio from the Security Bracket

Remove the radio from the security bracket as follows:

1. Open the slide locks by inserting the slide lock key into the keyhole. Rotate the key 90° (it will slip into a detent), and pull. The pull will be need to be quite firm to open each slide lock.

2. Remove the radio and its mounting rails by lifting it up and out of the security bracket base.

3. If required, remove the mounting rails from the radio body base by unscrewing them.

24.4 Replacing the Radio in the Security Bracket

To replace the radio in a security bracket, first follow the steps in "Removing a Radio from the Security Bracket" on page 527, and then follow from step 2 in "Installing the Security Bracket and Radio" on page 526.

24.5 Disassembling the Security Bracket

Disassemble the security bracket as follows:

1. Remove the radio from the security bracket by following the steps in "Removing a Radio from the Security Bracket" on page 527.

2. Unscrew the four self-tapping screws holding the security bracket base in place.

© Tait Electronics Limited November 2007

24.6 Re-Ordering Extra Parts

The following parts can be re-ordered separately in case of loss, or in situations where, for example, one security bracket is installed where several different radios may be installed at different times.

Part	Part Number	Quantity
Security Crdl Key TM8 (slide lock key)	319-60004-XX[1]	2
Security Crdl Mtg Short TM8 (short mounting rails for TM8100)	319-60002-XX[a]	2
Scrw M4*25 T/T P/T ContiR (for attaching short mounting rails to TM8100 radio)	349-02063-XX[a]	4
Security Crdl Mtg Tall TM8 (tall mounting rails for TM8200)	319-60003-XX[a]	2
Scrw M4*30 T/T P/T ContiR (for attaching tall mounting rails to TM8200 radio)	349-02068-XX[a]	4

1. Contact Technical Support for the exact IPN.

© Tait Electronics Limited November 2007

25 Installing a Remote Kit

A TMAA03-16 or TMAA03-25 remote kit can be used to install the control head of a graphical-display radio remotely from the radio body. The diagram below shows the parts used for this installation.

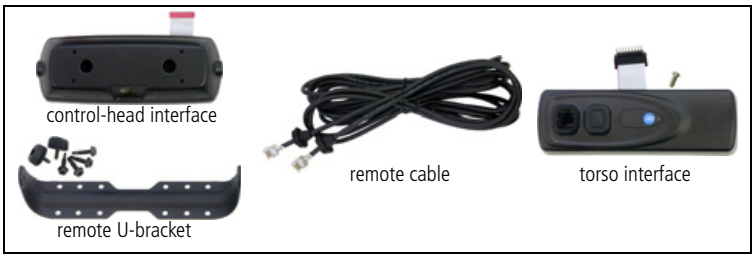

Note Although the torso interface is similar in appearance to the dual-RJ45 on the telemetry radio, the control head on the telemetry radio cannot be used for remote installation.

Note The interfaces in the TMAA03-16 or TMAA03-25 remote kit appear similar to the TMAA03-03, TMAC34-0T or TMAC34-1T. However, the interfaces in the remote kits are not compatible with TMAA03-03, TMAC34-0T or TMAC34-1T control-head interfaces.

25.1 Installation

Warning!! **Mount the remote U-bracket with the remote control-head assembly and the U-bracket with the radio body securely. These units must not break loose in the event of a collision. Unsecured radio units are dangerous to the vehicle occupants.**

Caution **Observe the installation warnings and safety regulations in the installation procedures of the radio.**

Important This equipment contains devices which are susceptible to damage from static discharges. Refer to "ESD Precautions" on page 112 for more information.

Note Torx T10 and T20 screwdrivers are required for most of the screws in this installation.

The circled numbers in the following sections refer to the items in Figure 25.1 on page 530.

© Tait Electronics Limited November 2007

25.1.1 Overview

Installing the control head remotely is done in six steps:

1. Remove the control head from the radio body, if necessary.
2. Install the torso interface ① onto the radio body.
3. Mount the remote U-bracket ③ in the required position.
4. Install the control-head interface ② onto the control head and install the remote control-head assembly in the remote U-bracket.
5. Mount the U-bracket in the required position and install the radio body in the U-bracket.
6. Route the remote cable ④ between the remote control-head assembly and the radio body.

25.1.2 Parts Required

The following diagram identifies the parts for remote control-head installation and shows how they fit together.

Figure 25.1 Parts for remote control-head installation

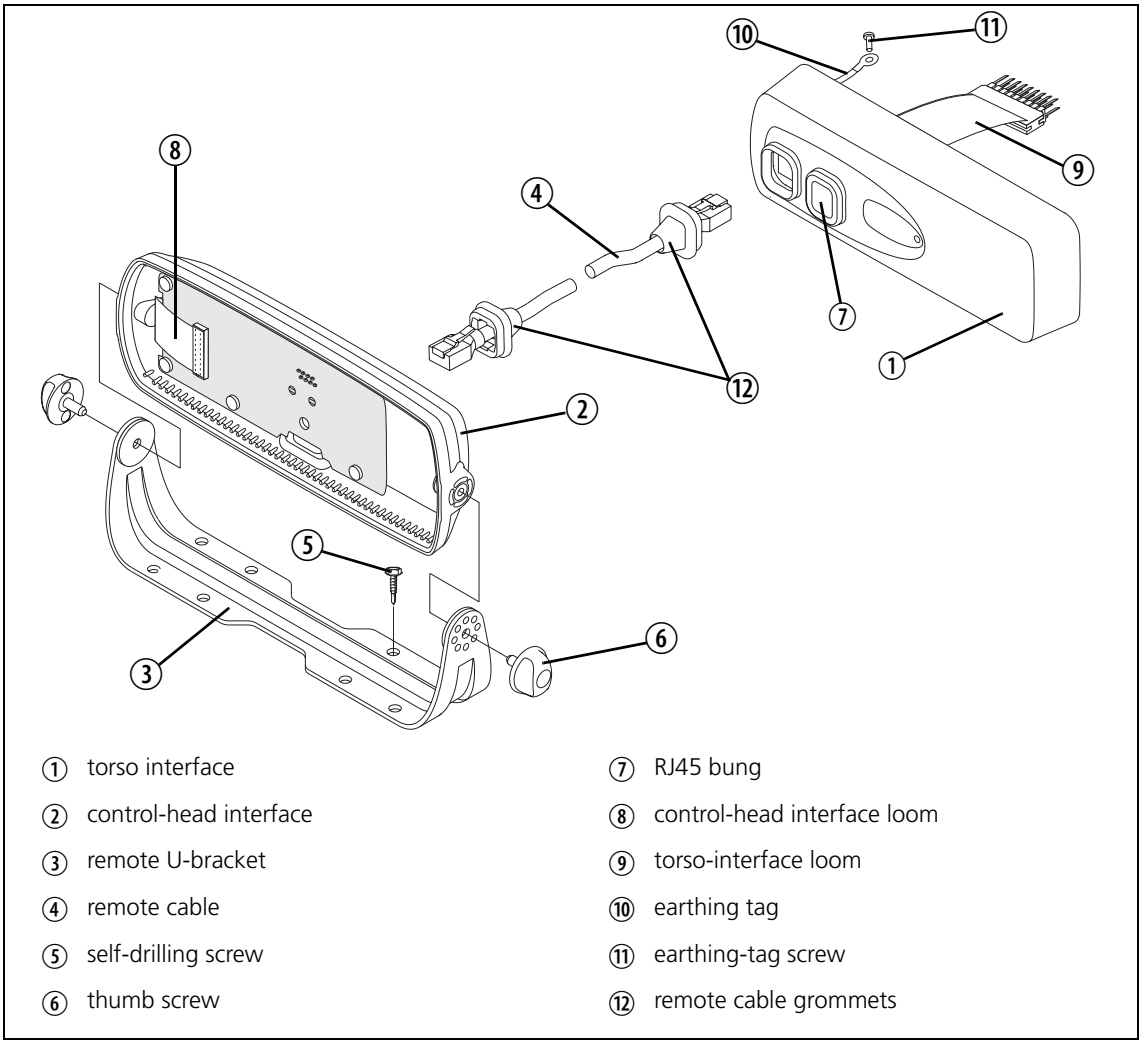

© Tait Electronics Limited November 2007

25.1.3 Removing the Control Head from the Radio Body (if necessary)

Caution **During this procedure, take care that the control-head seal is not damaged. Damage to this seal reduces environmental protection.**

1. On the underside of the radio, insert a 5mm (3/16 inch) flat-bladed screwdriver between the control head and the control-head seal, in the positions shown.

   Insertion points and are lever points and are indicated on the radio chassis by a dot-dash-dot pattern (•—•).

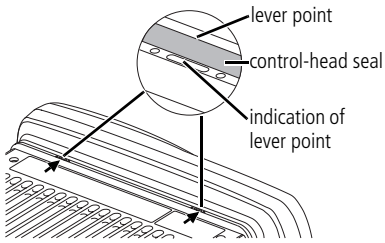

2. Use the screwdriver to lift the control head off the chassis clip, then repeat in the other position.

3. Unplug the control-head loom from the radio body.

   The control head is now separate from the radio body.

25.1.4 Installing the Torso Interface

The torso interface must be installed onto the radio body, in place of the control head.

1. Screw the solder tag ⑩ onto one of the screw bosses on the radio chassis.

2. Plug the torso-interface loom ⑨ onto the control-head connector.

3. Insert the bottom edge of the torso interface ① onto the two clips in the front of the radio chassis, then snap into place.

4. Remove the bung ⑦ covering the outer RJ45 connector. The remote cable ④ will plug into this connector once the installation is complete.

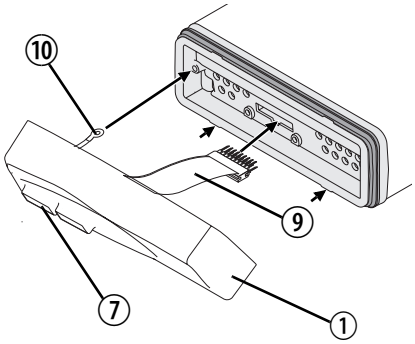

Important The inner RJ45 cavity is not used and has no connector installed so the RJ45-cavity bung must be installed at all times.

This ensures that the torso interface is sealed against water, dust and other environmental hazards.

© Tait Electronics Limited November 2007

25.1.5 Mounting the Remote U-Bracket

The remote U-bracket with its self-drilling screws, is used to install the remote control-head assembly on the dashboard or on any sufficiently flat surface.

Caution **When drilling holes in the vehicle, check that drilling at the selected points will not damage existing wiring.**

Important Check that the remote U-bracket is not distorted when the screws are tightened.

1. Drill any holes required for cables and install suitable grommets or bushings in the holes.
2. If precise positioning is required, predrill ∅ 3mm (1/8 inch) pilot holes for the self-drilling screws. Reduce the hole size in metal that is less than 1mm (1/32 inch) thick.
3. Screw the remote U-bracket in the chosen mounting position using the self-drilling screws provided. Use all four screws provided.

25.1.6 Installing the Control-Head Interface

With the control head separated from the radio body, the control-head interface ② must be installed on the rear of the control head.

1. Undo the two Torx T-20 screws on the adaptor flange of the control head, and remove the adaptor flange.
2. Unplug the control-head loom.

   The adaptor flange and control-head loom are not used for the remote control-head installation. Keep the two screws for step (4).
3. Plug the control-head interface loom ⑧ into the connector on the control head.

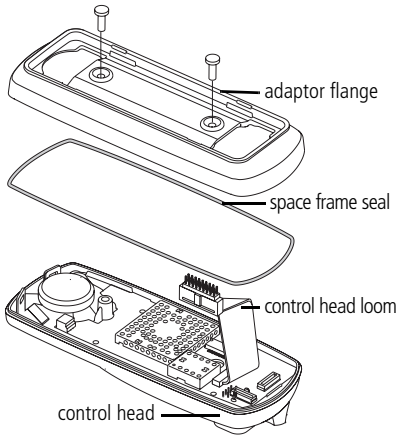

Important When fitting the control-head interface to the control-head, be careful not to damage the space frame seal.

4. Use the two screws from step (2) to fit the control-head interface to the control head through the two screw holes at the rear of the control-head interface.

© Tait Electronics Limited November 2007

Installing the Remote Control-Head Assembly in the Remote U-Bracket

1. Position the control-head assembly in the remote U-bracket and position it for a good viewing angle.

Note Adjusting the contrast on the control-head display may also improve its readability.

2. Screw the remote control-head assembly into position using the two thumb screws provided.

25.1.7 Mounting the U-Bracket and Installing the Radio Body

Mounting the U-Bracket

Install the U-bracket on any sufficiently flat surface, using self-drilling screws and washers.

Caution **When drilling holes in the vehicle, check that drilling at the selected points will not damage existing wiring, petrol tanks, fuel lines, brake pipes or battery cables.**

Important When mounting the U-bracket, check whether the mounting surface needs to be reinforced.

Important Install the U-bracket using at least four screws.

1. If the U-bracket is being mounted over a curved surface, bend the U-bracket tabs slightly, to match the surface shape.

2. Drill any holes required for cables and install suitable grommets or bushings in the holes.

Important Check that the U-bracket is not distorted when the screws are tightened.

3. If precise positioning is required, predrill ∅ 3mm (1/8 inch) pilot holes for the self-drilling screws. Reduce the hole size in metal that is less than 1mm (1/32 inch) thick.

4. Screw the U-bracket in the chosen mounting position using the self-drilling screws washers.

Installing the Radio Body in the U-Bracket

1. Connect the antenna and power cables to the rear of the radio.

2. Position the radio body in the U-bracket so that the holes in the U-bracket line up with the holes in the radio chassis.

3. Screw the radio into position using the four thumb screws.

© Tait Electronics Limited November 2007

25.1.8 Connecting the Remote Cable

Caution **When drilling holes in the vehicle, check that drilling at the selected points will not damage existing wiring, petrol tanks, fuel lines, brake pipes or battery cables.**

1. Drill any holes required for cables and install suitable grommets or bushings in the holes.
2. Plug one end of the remote cable into the control-head interface.
3. Run the remote cable to the torso interface and plug it into the RJ45 connector without a bung.

Installing the Remote-Cable Grommets

Install both the remote cable grommets, using the following procedure.

Important The remote cable grommets must be installed whenever the remote cable is plugged into the RJ45 sockets. When installed, the grommets have two functions:

- to prevent damage to the RJ45 sockets when there is movement of the remote cable, and
- to ensure that the radio and remote control-head assembly is sealed against water, dust and other environmental hazards.

1. Slide the grommet along the remote cable and push two adjacent corners of the grommet into the RJ45 socket cavity.
2. Squeeze the grommet and push the remaining corners into position.
3. Check that the grommet is seated correctly in the cavity.

Figure 25.2 Correct remote cable grommet seating

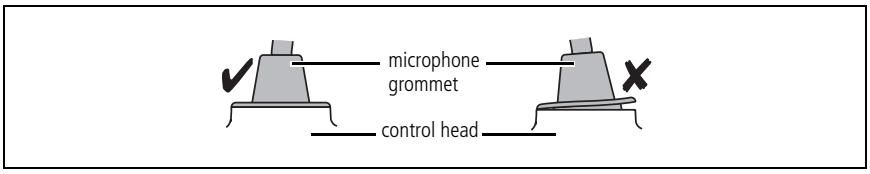

© Tait Electronics Limited November 2007

25.2 Circuit Description

Figure 25.3 shows a block diagram of the remote control-head installation. The control heads contain circuit boards with RS-485 driver components and an audio amplifier or attenuator.

Figure 25.3 Block diagram of remote control-head installation

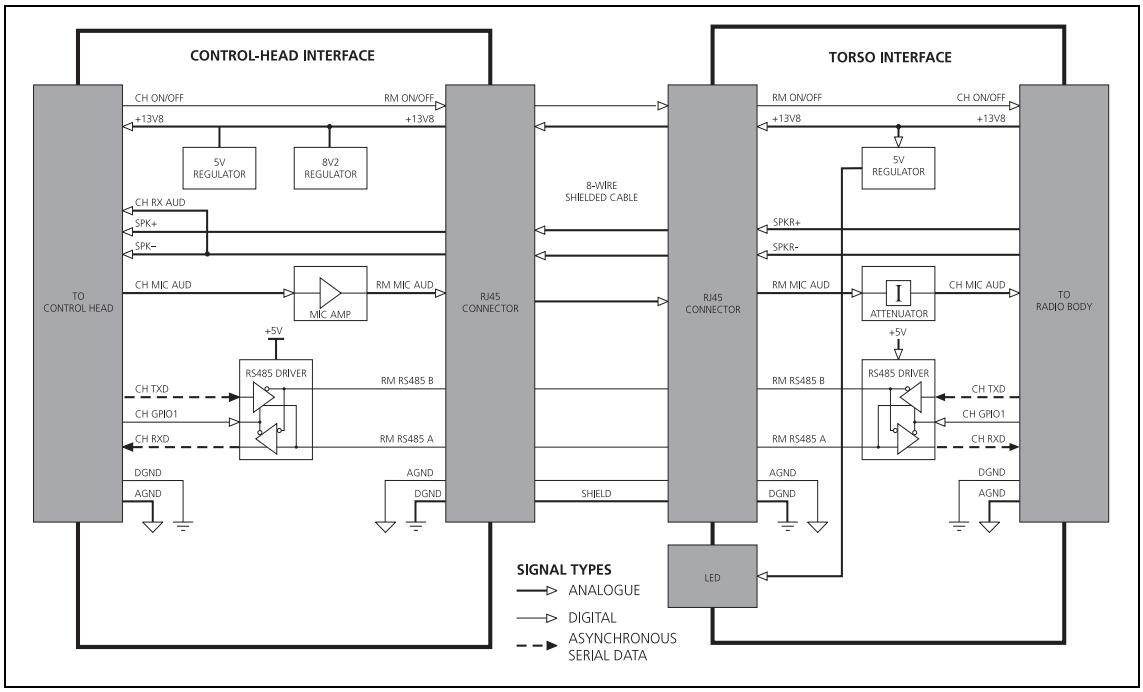

25.3 Servicing the Remote Kit Parts

25.3.1 Disassembling the Torso Interface

Disassemble only as much as is necessary to replace the defective parts. Re-assembly is carried out in reverse order of disassembly.

1. Remove the remote cable from the RJ45 connector.
2. Release the clips of the PCB bracket ④ and remove the control-head board ①.
3. Disconnect the torso-interface loom ②.
4. Unscrew the four PT type screws ③ and remove the PCB bracket ④.

Figure 25.4 Parts of the torso interface

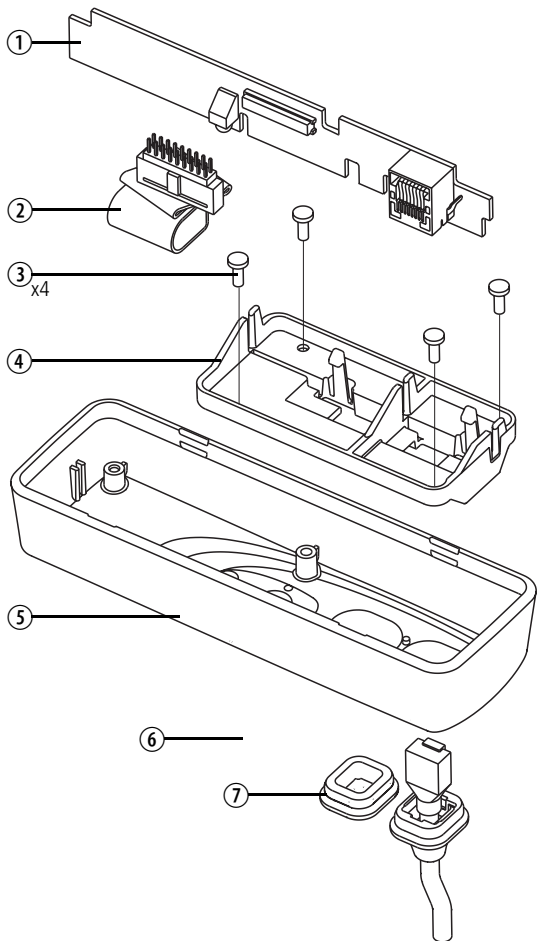

	Description	IPN
①	control-head board	
②	torso-interface loom	219-02882-00
③	3 x 8 PT screw (x4)	346-10030-XX[a]
④	PCB bracket	302-10063-XX[a]
⑤	front panel	316-06843-XX[a]
⑥	label	365-01751-XX[a]
⑦	RJ45 bung	302-50002-XX[a]

[a] Contact Technical Support for the exact IPN.

© Tait Electronics Limited November 2007

25.3.2 Disassembling the Control-Head Interface

Disassemble only as much as necessary to replace the defective parts or to swap the Micromatch connector loom. Re-assembly is carried out in reverse order of disassembly.

1. Remove the remote cable from the RJ45 connector.
2. Unscrew the seven PT type screws ① and remove the PCB ②.
3. Remove the control-head interface loom (not illustrated).

Figure 25.5 Parts of the control-head interface

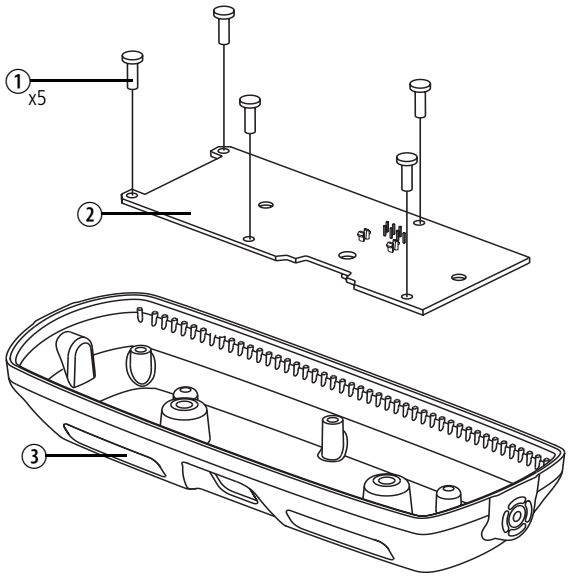

	Description	IPN
①	3 x 8 PT screw (x5)	346-10030-XX[a]
②	control-head interface PCB	
③	control-head interface	316-06842-XX[a]
	control-head interface loom	219-02914-00

[a] Contact Technical Support for the exact IPN.

© Tait Electronics Limited November 2007

25.4 PCB Information

25.4.1 Control-Head Interface (PCB IPN 220-02122-02)

Parts List

Ref.	IPN	Description
C101	015-06470-01	Cap Cer 1206 470n X7r 20% 50v
C102	018-16100-00	Cap 0603 100n 16v x7r + - 10%
C103	015-07220-08	Cap Cer 1206 2u2 16v X7r
C104	015-07220-08	Cap Cer 1206 2u2 16v X7r
C105	015-26220-18	CAP CER 0805 220N 10% X7R 50V
C106	018-14470-00	Cap 0603 4n7 50v X7r±10%
C107	015-23270-05	Cap 0805 270p 1% 200v Grm40
C108	015-23270-05	Cap 0805 270p 1% 200v Grm40
C109	018-14470-00	Cap 0603 4n7 50v X7r±10%
C110	015-23270-05	Cap 0805 270p 1% 200v Grm40
C111	015-23270-05	Cap 0805 270p 1% 200v Grm40
C112	015-07220-08	Cap Cer 1206 2u2 16v X7r
C113	018-14470-00	Cap 0603 4n7 50v X7r±10%
C114	018-16100-00	Cap 0603 100n 16v x7r + - 10%
C115	018-16100-00	Cap 0603 100n 16v x7r + - 10%
C116	015-07220-08	Cap Cer 1206 2u2 16v X7r
C117	015-07470-20	CAP Cer 1206 4u7 10% 25V X7R
D101	001-10000-99	Diode SMD BAV99 D-Sw SOT23
D102	001-10000-99	Diode SMD BAV99 D-Sw SOT23
D103	001-10153-00	Diode SMD SM15T30a TranSll Smc
D104	001-00010-47	Diode 1SMA5923 8v2 1.5w Zen
D105	001-10000-99	Diode SMD BAV99 D-Sw SOT23
D106	001-10000-99	Diode SMD BAV99 D-Sw SOT23
D107	001-10084-33	Diode SMD BZX84C3V3 Zen SOT23
E101	057-10020-02	Ind 0603 BlM18pg300 Emi Supr
E102	057-10020-02	Ind 0603 BlM18pg300 Emi Supr
E103	057-10600-05	Ind 0603 Blm11p600s .5a F/Bead
E104	057-10600-05	Ind 0603 Blm11p600s .5a F/Bead
E105	057-10020-02	Ind 0603 BlM18pg300 Emi Supr
E106	057-10020-02	Ind 0603 BlM18pg300 Emi Supr
E107	057-10020-02	Ind 0603 BlM18pg300 Emi Supr
E108	057-10600-05	Ind 0603 Blm11p600s .5a F/Bead
E109	057-10600-05	Ind 0603 Blm11p600s .5a F/Bead
F101	265-10150-00	Fuse SMD 1A 50V 0805 UL Cert
J100	240-00016-00	Conn RJ45 Shld 8P8C LP RA TH
J101	240-10000-11	Conn SMD 18w Skt M/Match
Q101	000-10084-73	Xstr BC847BPNNPN/PNP SOT363
R101	038-10000-00	Res 0603 Zero 0hm 1/16w ± 5%
R102	036-03100-10	Res 2512 100R 5% 1W
R103	036-03100-10	Res 2512 100R 5% 1W
R104	038-13100-10	Res 0603 100R 1/10w 1%
R105	038-15100-10	Res 0603 10k 1/10w 1%
R106	038-14220-00	Res 0603 2k2 1/10w 5%
R107	038-15100-10	Res 0603 10k 1/10w 1%
R108	038-13560-10	Res 0603 560R 1/10w 1%
R109	038-13100-10	Res 0603 100R 1/10w 1%
R110	036-02270-10	Res 1206 27.0e 1%
R111	036-02270-10	Res 1206 27.0e 1%
R112	038-13100-10	Res 0603 100R 1/10w 1%
R113	038-12100-10	Res 0603 10e 1%
R114	038-15100-10	Res 0603 10k 1/10w 1%
R115	038-16150-10	Res 0603 150k 1%
R116	038-16330-10	Res 0603 330k 1/10w 1%
R117	038-14270-00	Res 0603 2k7 1/10w 5%
R118	038-13560-10	Res 0603 560R 1/10w 1%
R119	038-16100-10	Res 0603 100k 1/10w 1%
R120	038-14220-00	Res 0603 2k2 1/10w 5%
R121	038-13560-10	Res 0603 560R 1/10w 1%
R122	038-13390-10	Res 0603 390R 1/10w 1%
R123	038-16100-10	Res 0603 100k 1/10w 1%
U101	002-10078-00	IC SMD MC78M05CDT5v Reg0.5a
U102	002-10014-85	IC ADM1485 RS485 Transc S08
	220-02122-02	PCB MFx Single Rmt Head I/F

Mechanical Parts for the Control-Head Interface and the Torso Interface

219-02882-00	Loom Control Head TMA
219-02914-00	Loom MFX Remote Head
219-02918-00	Cbl Rmt Ctrl Hd Kit
302-10062-00	Brkt Remote Head TM8200
302-10063-00	Brkt PCB Remote TM8200 Body
316-06842-00	Pnl Rear TM8200 MF2
316-06843-00	Pnl Frt Remote TM8200 MF0
349-02062-00	Scrw M3*8 T/T P/T ContiR
402-00020-00	F/Inst TMAA03-16 Sngl Hd Rmt
302-05263-00	Brkt U Thumb Scrw TMA
302-50002-00	Bung RJ45 MFO
353-05007-00	Wshr Rubber M4*19*1.0 S/A
354-01052-00	Fsnr Bush PSM SHK-B-M4 Ins
349-00060-00	Scrw 10GX20 SLFDRL Hex/Poz TMA

Remote Cable Parts

219-02918-00	**Cbl Rmt Ctrl Hd Kit, comprising:**
240-02158-00	Conn Shld RJ45 Shortbody Plg
360-02022-00	Grommet Mic TMA

© Tait Electronics Limited November 2007

Grid Reference List

Ref.	PCB	Circuit
C101	F3	1D2
C102	F2	1D3
C103	K1	1D5
C104	F4	1E3
C105	E4	1D3
C106	G1	1C4
C107	F1	1C2
C108	G1	1C3
C109	E4	1C3
C110	F4	1B2
C111	F4	1B2
C112	M3	1E5
C113	M3	1D5
C114	M3	1E6
C115	M3	1D6
C116	M4	1D6
C117	M4	1D6
D101	J2	1C4 1C5
D102	J1	1C4
D103	G4	1E2
D104	J4	1E3
D105	F4	1D4 1D3
D106	D4	1B2
D107	M4	1D7
E101	F3	1B2
E102	F4	1B3
E103	G1	1C3
E104	G1	1C3
E105	K3	1D1
E106	D3	1D1
E107	E4	1D2
E108	E4	1C2
E109	K1	1D5
F101	F3	1D2
J100	E4	1C1
J101	L2	1C7
MT100	A3	1E1
MT101	J3	1E1
Q101	M2	1E5
R101	K3	1D1
R102	G4	1E3
R103	G4	1E3
R104	D4	1B3
R105	K1	1B6
R106	K2	1C5
R107	K2	1B5
R108	M2	1B6
R109	E4	1D3
R110	G2	1C4
R111	G1	1C4

Ref.	PCB	Circuit
R112	G1	1C4
R113	M2	1E4
R114	M3	1E5
R115	M3	1E6
R116	M3	1E6
R117	M2	1D5
R118	M3	1D5
R119	M3	1D6
R120	M3	1D6
R121	M4	1E7
R122	L4	1D6
R123	K2	1B6
U101	G3	1D3
U102	K1	1C5

Ref.	PCB	Circuit

© Tait Electronics Limited November 2007

Board Layout

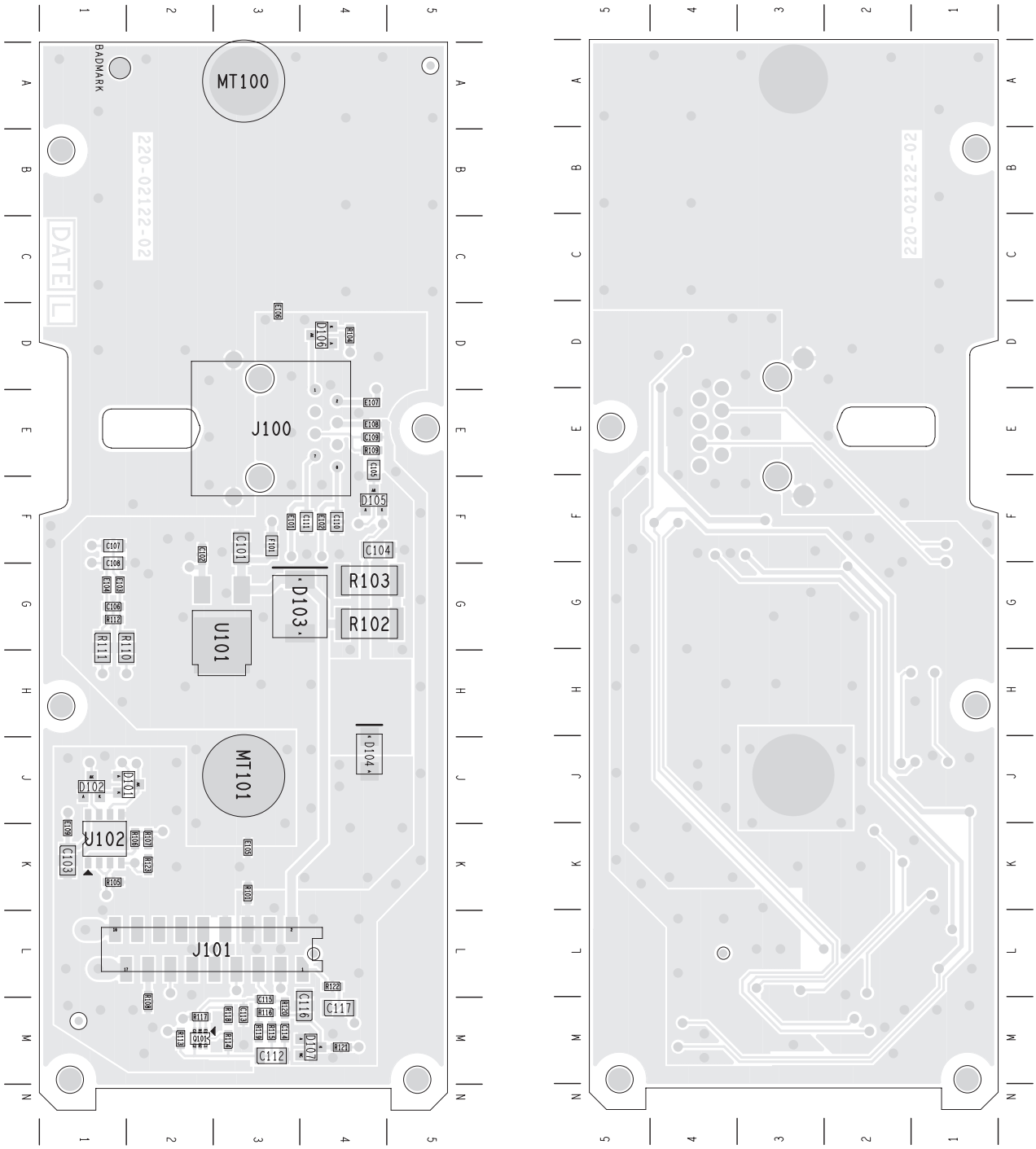

IPN 220-02122-02

© Tait Electronics Limited November 2007

Circuit Diagram

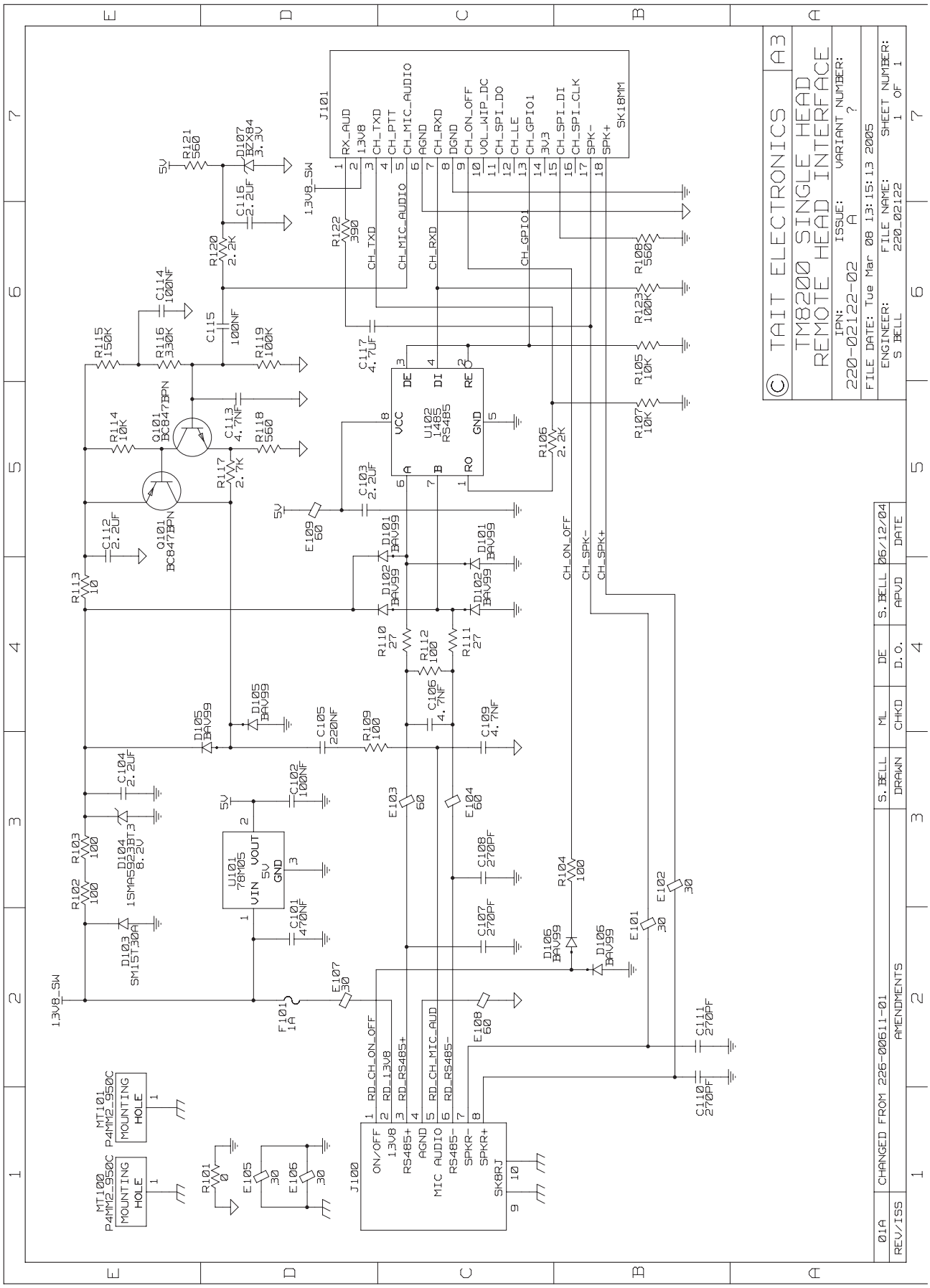

25.4.2 RJ-45 Control Head (PCB IPN 220-02123-01)

Parts List

Ref.	IPN	Description
C1	015-06470-01	Cap Cer 1206 470n X7r 20% 50v
C2	018-14470-00	Cap 0603 4n7 50v X7r±10%
C3	015-07220-08	Cap Cer 1206 2u2 16v X7r
C4	018-13470-00	Cap 0603 470p 50v X7r±10%
C5	018-13470-00	Cap 0603 470p 50v X7r±10%
C6	018-14470-00	Cap 0603 4n7 50v X7r±10%
C7	015-23270-05	Cap 0805 270p 1% 200v Grm40
C8	015-23270-05	Cap 0805 270p 1% 200v Grm40
C9	018-15330-00	Cap 0603 33n 50v X7r10%
C10	015-23270-05	Cap 0805 270p 1% 200v Grm40
C11	015-23270-05	Cap 0805 270p 1% 200v Grm40
D1	001-10000-99	Diode SMD BAV99 D-Sw SOT23
DS1	008-00014-74	LED Hp Red Rang PCB Mtg
D2	001-10000-99	Diode SMD BAV99 D-Sw SOT23
D3	001-10000-99	Diode SMD BAV99 D-Sw SOT23
E1	057-10600-05	Ind 0603 Blm11p600s .5a F/Bead
E2	057-10600-05	Ind 0603 Blm11p600s .5a F/Bead
E3	057-10600-05	Ind 0603 Blm11p600s .5a F/Bead
E4	057-10600-05	Ind 0603 Blm11p600s .5a F/Bead
E5	057-10020-02	Ind 0603 BlM18pg300 Emi Supr
J1	240-10000-11	Conn SMD 18w Skt M/Match
J3	240-00016-00	Conn RJ45 Shld 8P8C LP RA TH
Q1	000-10561-60	XSTR BCX56-16 AF NPN SOT89
R1	038-13100-10	Res 0603 100R 1/10w 1%
R3	038-15100-10	Res 0603 10k 1/10w 1%
R4	038-13100-10	Res 0603 100R 1/10w 1%
R5	038-16100-10	Res 0603 100k 1/10w 1%
R6	038-14220-00	Res 0603 2k2 1/10w 5%
R7	038-15100-10	Res 0603 10k 1/10w 1%
R8	038-13560-10	Res 0603 560R 1/10w 1%
R9	038-13560-10	Res 0603 560R 1/10w 1%
R10	036-02270-10	Res 1206 27.0e 1%
R11	036-02270-10	Res 1206 27.0e 1%
R12	038-13120-00	Res 0603 120R 1/10w 5%
R13	038-16100-10	Res 0603 100k 1/10w 1%
R14	036-05100-01	Res M/F 1206 10k 5%
U1	002-10078-00	IC SMD MC78M05CDT5v Reg0.5a
U2	002-10014-85	IC ADM1485 RS485 Transc S08
	220-02123-01	PCB Single Rmt Radio I/F

Grid Reference List

Ref.	PCB	Circuit
C1	F2	1B1
C10	M2	1B6
C11	M2	1B7
C2	H2	1D3
C3	J1	1D4
C4	J2	1D5
C5	L2	1D5
C6	L2	1C6
C7	M2	1C6
C8	M2	1C6
C9	N2	1C6
D1	K2	1C4 1D4
D2	K1	1C5 1D5
D3	L2	1D6 1E6
DS1	F2	1B1
E1	L2	1C5
E2	M2	1B6
E3	M2	1D6
E4	L2	1C6
E5	N2	1D6
J1	H2	1D1
J3	N2	1C7
MT1	R2	1B4
Q1	F2	1B1
R1	F2	1B1
R10	L2	1D5
R11	L2	1C5
R12	L2	1C5
R13	L2	1D5
R14	M2	1E6
R2	H2	1D2
R3	G2	1D3
R4	H2	1D3
R5	K2	1D3
R6	J2	1D4
R7	J2	1D4
R8	K1	1D5
R9	L2	1C5
TP2	M1	1B4
U1	D2	1B2
U2	K1	1C4

© Tait Electronics Limited November 2007

Board Layout

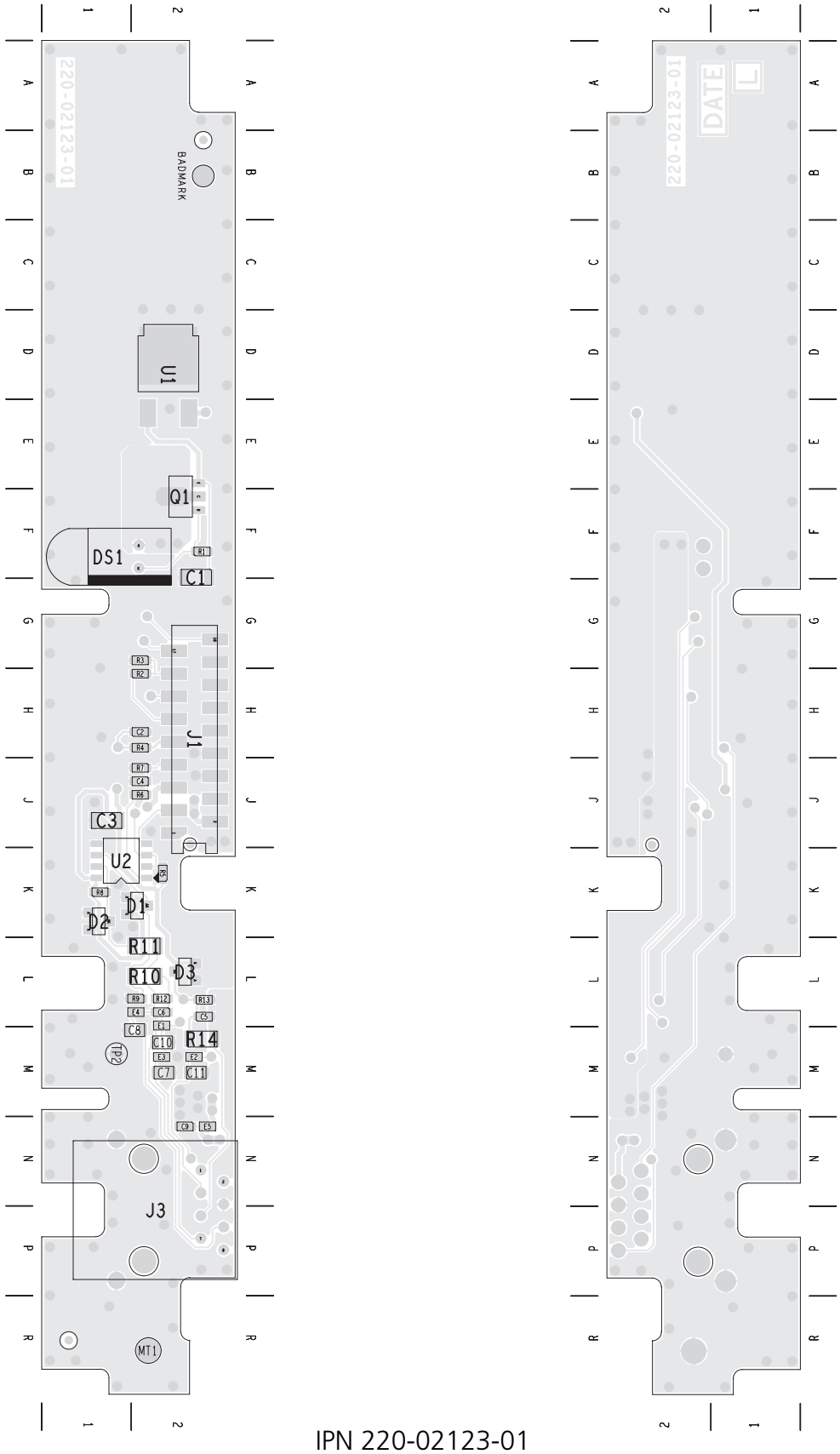

IPN 220-02123-01

Circuit Diagram

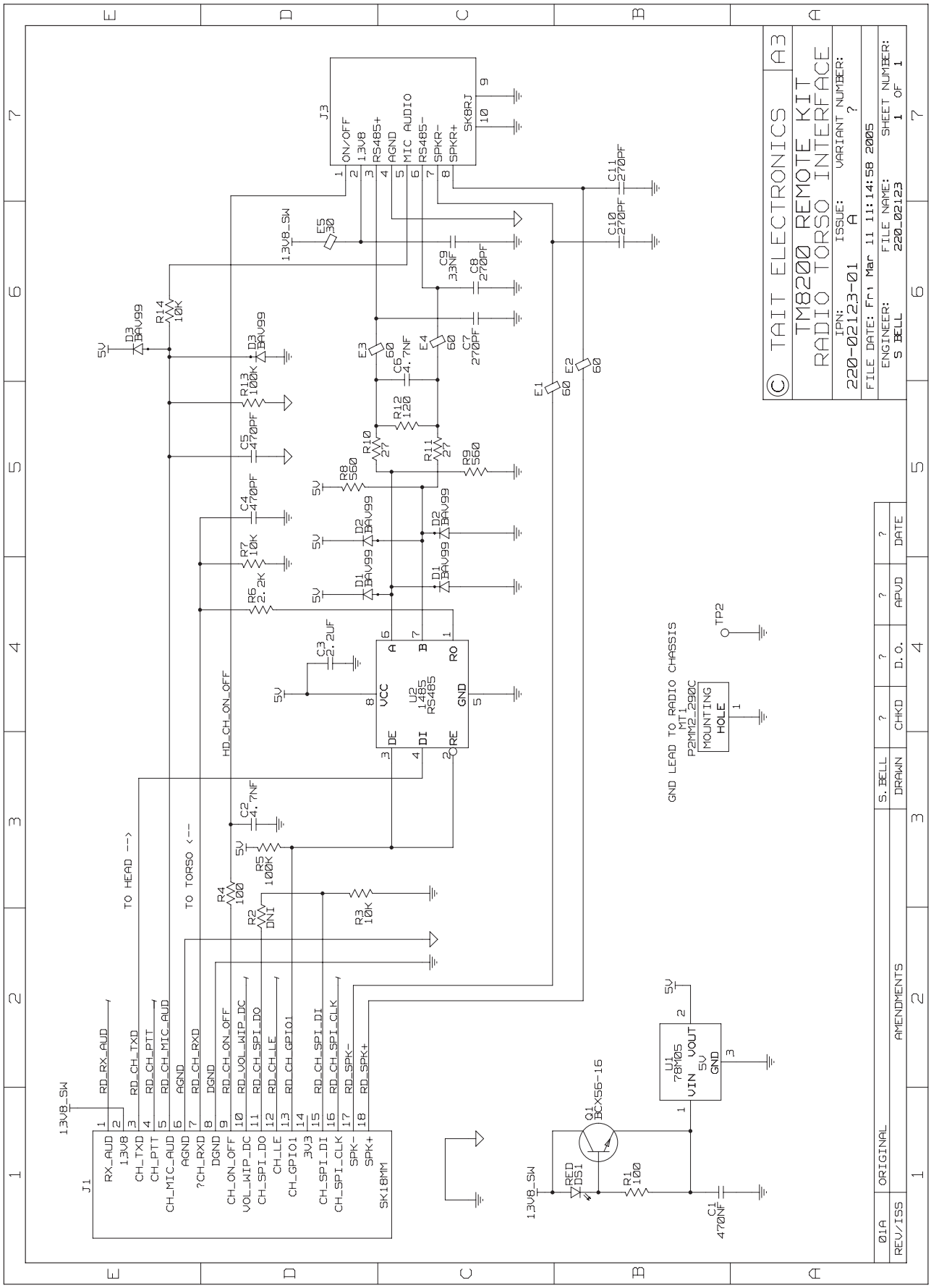

© Tait Electronics Limited November 2007

26 Installing an Enhanced Remote Kit

The control head of a graphical-display radio can be installed remotely from the radio body. The diagram below shows the parts used for this installation.

TMAA03-03 remote control-head back (includes remote U-bracket)	TMAA04-01 remote cable	TMAC34-0T (TM8200) or TMAC34-1T(TM9100) torso interface

Note Although the torso interface is similar in appearance to the RJ45 control head on the telemetry radio, the control head on the telemetry radio cannot be used for remote installation.

26.1 Installation

Warning!! **Mount the remote U-bracket with the remote control-head assembly and the U-bracket with the radio body securely. These units must not break loose in the event of a collision. Unsecured radio units are dangerous to the vehicle occupants.**

Caution **Observe the installation warnings and safety regulations in the installation procedures of the radio.**

Important This equipment contains devices which are susceptible to damage from static discharges. Refer to "ESD Precautions" on page 112 for more information.

Note Torx T10 and T20 screwdrivers are required for most of the screws in this installation.

The circled numbers in the following sections refer to the items in Figure 26.1 on page 546.

© Tait Electronics Limited November 2007

26.1.1 Overview

Installing the control head remotely is done in six steps:

1. Remove the control head from the radio body, if necessary.
2. Install the torso interface ① onto the radio body.
3. Mount the remote U-bracket ③ in the required position.
4. Install the control-head interface ② onto the control head and install the remote control-head assembly in the remote U-bracket.
5. Mount the U-bracket in the required position and install the radio body in the U-bracket.
6. Route the remote cable ④ between the remote control-head assembly and the radio body.

26.1.2 Parts Required

The following diagram identifies the parts for remote control-head installation and shows how they fit together.

Figure 26.1 Parts for remote control-head installation

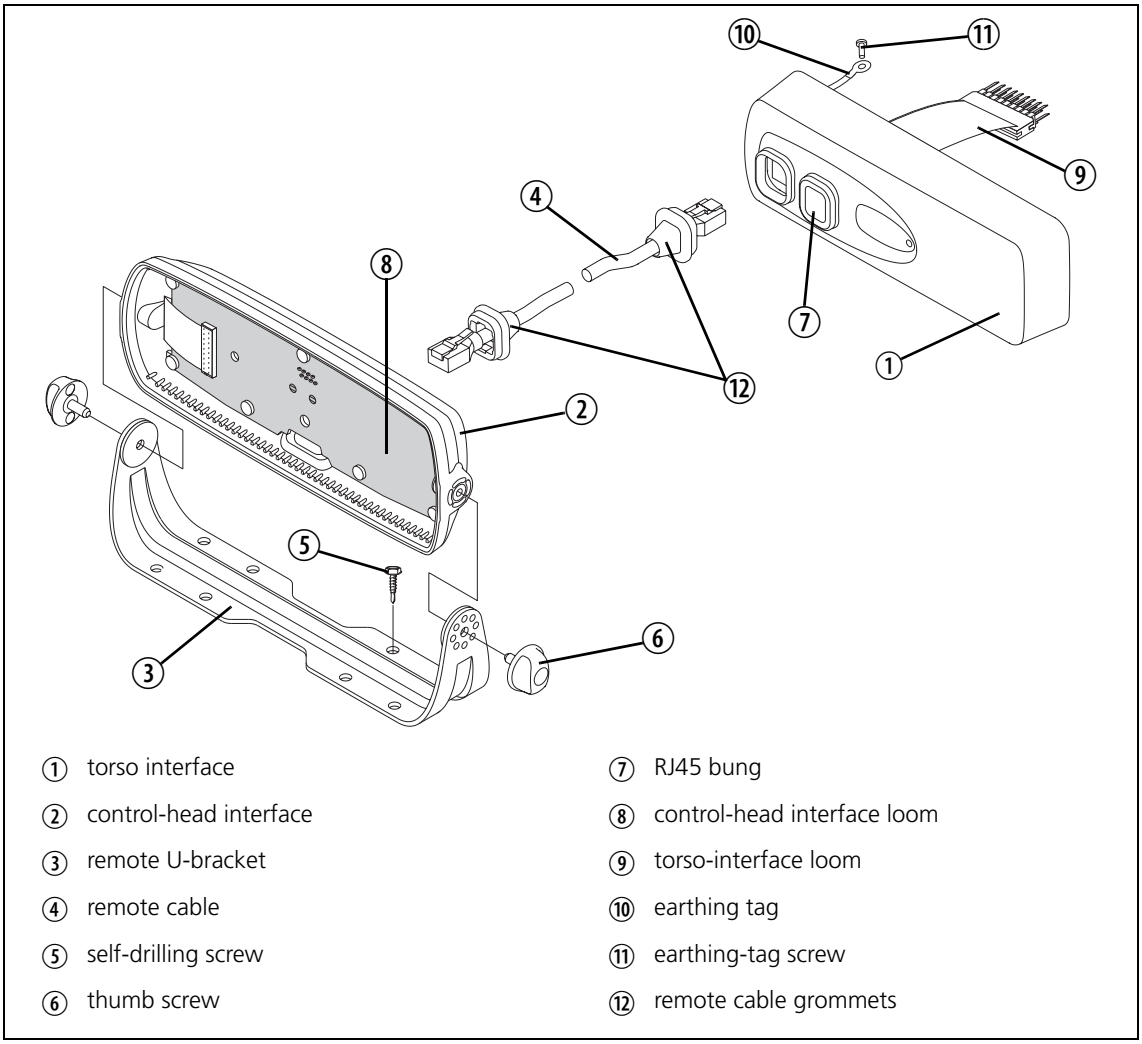

© Tait Electronics Limited November 2007

26.1.3 Removing the Control Head from the Radio Body (if necessary)

Caution **During this procedure, take care that the control-head seal is not damaged. Damage to this seal reduces environmental protection.**

1. On the underside of the radio, insert a 5mm (3/16 inch) flat-bladed screwdriver between the control head and the control-head seal, in the positions shown.

   Insertion points and are lever points and are indicated on the radio chassis by a dot-dash-dot pattern (•—•).

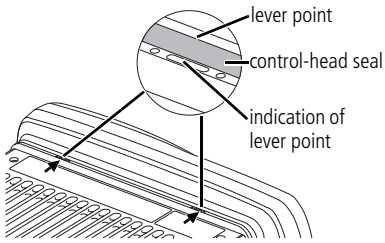

2. Use the screwdriver to lift the control head off the chassis clip, then repeat in the other position.

3. Unplug the control-head loom from the radio body.

   The control head is now separate from the radio body.

26.1.4 Installing the Torso Interface

The torso interface must be installed onto the radio body, in place of the control head.

1. Screw the solder tag ⑩ onto one of the screw bosses on the radio chassis.

2. Plug the torso-interface loom ⑨ onto the control-head connector.

3. Insert the bottom edge of the remote control head ① onto the two clips in the front of the radio chassis, then snap into place.

4. Remove one of the bungs ⑦ covering the RJ45 connectors. The remote cable ④ will plug into this connector once the installation is complete.

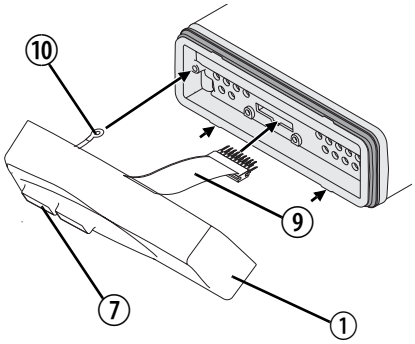

If the remote cable is not installed in the RJ45 cavity, then the RJ45 bung must be installed. This ensures that the torso interface is sealed against water, dust and other environmental hazards.

© Tait Electronics Limited November 2007

26.1.5 Mounting the Remote U-Bracket

The remote U-bracket with its self-drilling screws, is used to install the remote control-head assembly on the dashboard or on any sufficiently flat surface.

Caution **When drilling holes in the vehicle, check that drilling at the selected points will not damage existing wiring.**

Important Check that the remote U-bracket is not distorted when the screws are tightened.

1. Drill any holes required for cables and install suitable grommets or bushings in the holes.
2. If precise positioning is required, predrill ∅ 3mm (1/8 inch) pilot holes for the self-drilling screws. Reduce the hole size in metal that is less than 1mm (1/32 inch) thick.
3. Screw the remote U-bracket in the chosen mounting position using the self-drilling screws provided. Use all four screws provided.

26.1.6 Installing the Control-Head Interface

With the control head separated from the radio body, the control-head interface ② must be installed on the rear of the control head.

1. Undo the two Torx T-20 screws on the adaptor flange of the control head, and remove the adaptor flange.
2. Unplug the control-head loom.

   The adaptor flange and control-head loom are not used for the remote control-head installation. Keep the two screws for step (4).
3. Plug the control-head interface loom ⑧ into the connector on the control head.

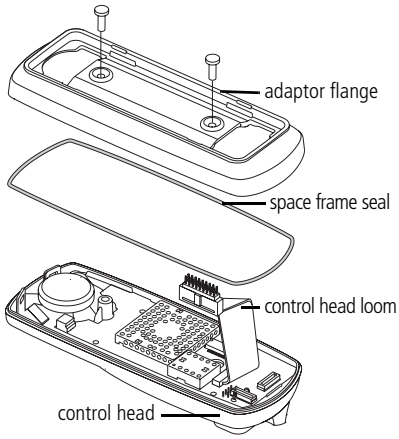

Important When fitting the control-head interface to the control-head, be careful not to damage the space frame seal.

4. Use the two screws from step (2) to fit the control-head interface to the control head through the two screw holes at the rear of the control-head interface.

Changing the Remote U-Bracket Orientation

The control-head interface is configured for installation with the RJ45 socket facing downwards (U-bracket below control head, as in Figure 26.1). If the RJ45 socket is required to face upwards (control head hanging from

© Tait Electronics Limited November 2007

U-bracket), the control-head interface loom ⑧ must be moved, so that it can reach the control head connector.

To move the control-head interface loom:

1. Undo the seven Torx T-10 screws on the control-head board, and remove the control-head interface board from the control-head interface.
2. Change the control-head interface loom ⑧ to the opposite connector.
3. Reinstall the control-head interface board.

Installing the Remote Control-Head Assembly in the Remote U-Bracket

1. Position the control-head assembly in the remote U-bracket and position it for a good viewing angle.

Note Adjusting the contrast on the control-head display may also improve its readability.

2. Screw the remote control-head assembly into position using the two thumb screws provided.

26.1.7 Mounting the U-Bracket and Installing the Radio Body

Mounting the U-Bracket

Install the U-bracket on any sufficiently flat surface, using self-drilling screws and washers.

Caution **When drilling holes in the vehicle, check that drilling at the selected points will not damage existing wiring, petrol tanks, fuel lines, brake pipes or battery cables.**

Important When mounting the U-bracket, check whether the mounting surface needs to be reinforced.

Important Install the U-bracket using at least four screws.

1. If the U-bracket is being mounted over a curved surface, bend the U-bracket tabs slightly, to match the surface shape.
2. Drill any holes required for cables and install suitable grommets or bushings in the holes.

Important Check that the U-bracket is not distorted when the screws are tightened.

3. If precise positioning is required, predrill ∅ 3mm (1/8 inch) pilot holes for the self-drilling screws. Reduce the hole size in metal that is less than 1mm (1/32 inch) thick.

© Tait Electronics Limited November 2007

4. Screw the U-bracket in the chosen mounting position using the self-drilling screws washers.

Installing the Radio Body in the U-Bracket

1. Connect the antenna and power cables to the rear of the radio.
2. Position the radio body in the U-bracket so that the holes in the U-bracket line up with the holes in the radio chassis.
3. Screw the radio into position using the four thumb screws.

26.1.8 Connecting the Remote Cable

Caution **When drilling holes in the vehicle, check that drilling at the selected points will not damage existing wiring, petrol tanks, fuel lines, brake pipes or battery cables.**

1. Drill any holes required for cables and install suitable grommets or bushings in the holes.
2. Plug one end of the remote cable into the control-head interface.
3. Run the remote cable to the torso interface and plug it into the RJ45 connector without a bung.

Installing the Remote-Cable Grommets

Install both the remote cable grommets, using the following procedure.

Important The remote cable grommets must be installed whenever the remote cable is plugged into the RJ45 sockets. When installed, the grommets have two functions:

- to prevent damage to the RJ45 sockets when there is movement of the remote cable, and
- to ensure that the radio and remote control-head assembly is sealed against water, dust and other environmental hazards.

1. Slide the grommet along the remote cable and push two adjacent corners of the grommet into the RJ45 socket cavity.
2. Squeeze the grommet and push the remaining corners into position.
3. Check that the grommet is seated correctly in the cavity.

Figure 26.2 Correct remote cable grommet seating

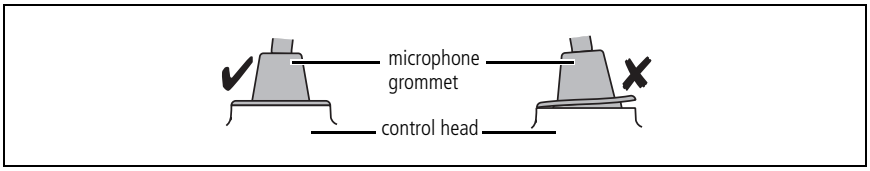

© Tait Electronics Limited November 2007

26.2 Circuit Description

Figure 26.3 shows a block diagram of the remote control-head installation. Both control heads contain a circuit board with audio amplifiers and RS-485 driver components.

Figure 26.3 Block diagram of remote control-head installation

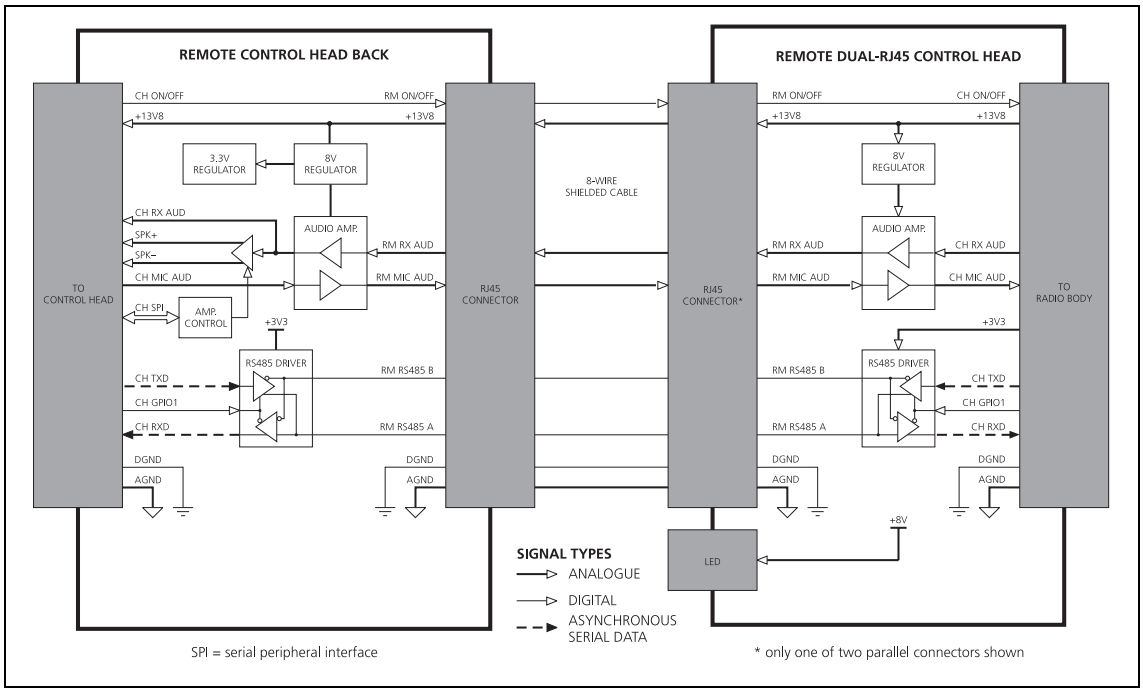

26.3 Servicing the Remote Control-Head Installation Parts

26.3.1 Disassembling the Torso Interface

Disassemble only as much as is necessary to replace the defective parts. Re-assembly is carried out in reverse order of disassembly.

1. Release the clip of the PCB bracket ④ and remove the control-head board ①.
2. Disconnect the torso-interface loom ②.
3. Unscrew the four PT type screws ③ and remove the PCB bracket ④.

Figure 26.4 Parts of the torso interface

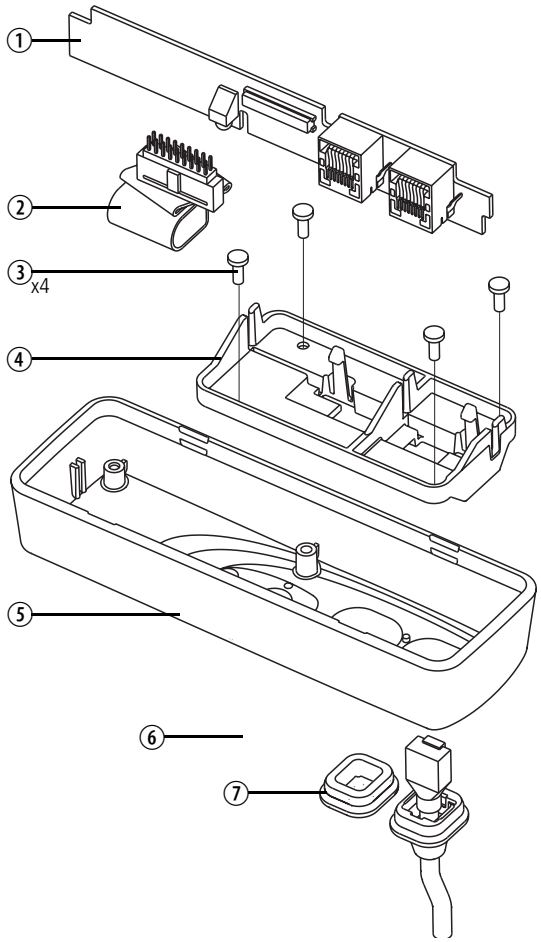

	Description	IPN
①	control-head board	
②	torso-interface loom	219-02882-XX[a]
③	3 x 8 PT screw (x4)	346-10030-XX[a]
④	PCB bracket	302-10063-XX[a]
⑤	front panel	316-06843-XX[a]
⑥	label	365-01751-XX[a]
⑦	RJ45 bung	302-50002-XX[a]

[a] Contact Technical Support for the exact IPN.

© Tait Electronics Limited November 2007

26.3.2 Disassembling the Control-Head Interface

Disassemble only as much as necessary to replace the defective parts or to swap the Micromatch connector loom. Re-assembly is carried out in reverse order of disassembly.

1. Unscrew the seven PT type screws ① and remove the PCB ②.
2. Remove the control-head interface loom (not illustrated).

Figure 26.5 Parts of the control-head interface

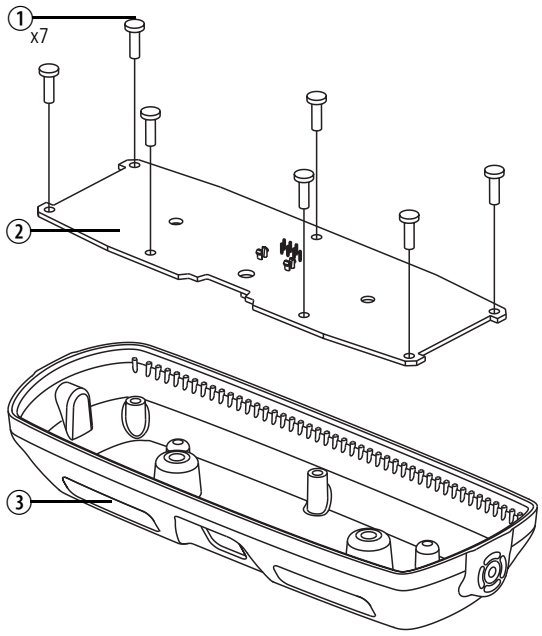

	Description	IPN
①	3 x 8 PT screw (x7)	346-10030-XX[a]
②	control-head interface PCB	
③	control-head interface	316-06842-XX[a]
	control-head interface loom	219-02914-XX[a]

[a] Contact Technical Support for the exact IPN.

© Tait Electronics Limited November 2007

26.4 PCB Information

26.4.1 TMAA03-03 Control-Head Interface (PCB IPN 220-01721-04)

Parts List

Ref.	IPN	Description
C1	016-08100-03	Cap Elec SMD 10uF 35V 105/2000
C100	018-14100-00	Cap 0603 1n 50v X7r ±10%
C101	018-14100-00	Cap 0603 1n 50v X7r ±10%
C102	015-02470-06	Cap Cer 1210 47p NPO 500v
C103	015-02470-06	Cap Cer 1210 47p NPO 500v
C110	018-16100-00	Cap 0603 100n 16v x7r + - 10%
C300	015-06470-01	Cap Cer 1206 470n X7r 20% 50v
C301	016-07470-01	Cap Elec SMD 4u7 6*4 16v 20%
C310	015-26100-08	Cap Cer 0805 100n 10% X7r 50v
C312	014-07470-05	Cap Tant SMD 4u7 16v 10% A
C320	016-08100-03	Cap Elec SMD 10uF 35V 105/2000
C400	018-16100-00	Cap 0603 100n 16v x7r + - 10%
C401	015-07220-08	Cap Cer 1206 2u2 16v X7r
C410	018-16100-00	Cap 0603 100n 16v x7r + - 10%
C411	018-13100-00	Cap 0603 100p 50v NPO ±5%
C420	018-16100-00	Cap 0603 100n 16v x7r + - 10%
C421	018-13100-00	Cap 0603 100p 50v NPO ±5%
C422	015-07220-08	Cap Cer 1206 2u2 16v X7r
C423	015-07220-08	Cap Cer 1206 2u2 16v X7r
C430	015-07220-08	Cap Cer 1206 2u2 16v X7r
C500	015-26100-08	Cap Cer 0805 100n 10% X7r 50v
C600	015-26100-08	Cap Cer 0805 100n 10% X7r 50v
C601	015-26100-08	Cap Cer 0805 100n 10% X7r 50v
C610	015-26100-08	Cap Cer 0805 100n 10% X7r 50v
C611	015-07220-08	Cap Cer 1206 2u2 16v X7r
C612	015-07220-08	Cap Cer 1206 2u2 16v X7r
C700	015-26100-08	Cap Cer 0805 100n 10% X7r 50v
C701	015-07220-35	Cap Cer 1210 2u2 X5R 35v
C702	015-07220-35	Cap Cer 1210 2u2 X5R 35v
C703	015-06470-01	Cap Cer 1206 470n X7r 20% 50v
C704	018-16100-00	Cap 0603 100n 16v x7r + - 10%
C705	018-16100-00	Cap 0603 100n 16v x7r + - 10%
C706	018-13220-00	Cap 0603 220p 50v NPO±5%
C707	015-06470-01	Cap Cer 1206 470n X7r 20% 50v
C708	015-07220-35	Cap Cer 1210 2u2 X5R 35v
C710	015-07220-35	Cap Cer 1210 2u2 X5R 35v
C711	015-07220-35	Cap Cer 1210 2u2 X5R 35v
C712	015-07220-35	Cap Cer 1210 2u2 X5R 35v
C730	015-26220-18	CAP CER 0805 220N 10% X7R 50V
C731	015-26220-18	CAP CER 0805 220N 10% X7R 50V
C732	018-14100-00	Cap 0603 1n 50v X7r ±10%
C733	018-14100-00	Cap 0603 1n 50v X7r ±10%
C734	015-07220-08	Cap Cer 1206 2u2 16v X7r
C735	015-07220-08	Cap Cer 1206 2u2 16v X7r
D100	001-10000-99	Diode SMD BAV99 D-Sw SOT23
D101	001-10000-99	Diode SMD BAV99 D-Sw SOT23
D102	001-10000-99	Diode SMD BAV99 D-Sw SOT23
D103	001-10000-99	Diode SMD BAV99 D-Sw SOT23
D104	001-10000-99	Diode SMD BAV99 D-Sw SOT23
D110	001-10084-91	Diode SMD BZX84C9V1 Zen SOT23
D201	001-10000-99	Diode SMD BAV99 D-Sw SOT23
D211	001-10000-99	Diode SMD BAV99 D-Sw SOT23
D300	001-10000-99	Diode SMD BAV99 D-Sw SOT23
D720	001-10841-10	Diode SMD BZX84C11v ZEN SOT23
D730	001-10014-03	Diode SMD MBRS140T3 Sch
D731	001-10014-03	Diode SMD MBRS140T3 Sch

Ref.	IPN	Description
E100	057-10081-06	Ind 1806 Blm41p750s Emi Supr
E101	057-10081-06	Ind 1806 Blm41p750s Emi Supr
E102	057-10600-05	Ind 0603 Blm11p600s .5a F/Bead
E103	057-10600-05	Ind 0603 Blm11p600s .5a F/Bead
E105	057-10081-06	Ind 1806 Blm41p750s Emi Supr
E710	057-10600-05	Ind 0603 Blm11p600s .5a F/Bead
E711	057-10081-06	Ind 1806 Blm41p750s Emi Supr
E730	057-10081-06	Ind 1806 Blm41p750s Emi Supr
E731	057-10081-06	Ind 1806 Blm41p750s Emi Supr
J100	240-00016-00	Conn RJ45 Shld 8P8C LP RA TH
J200	240-10000-11	Conn SMD 18w Skt M/Match
J201	240-10000-11	Conn SMD 18w Skt M/Match
L712	057-10100-65	Ind SMD Pwr Cdrh6D38 100UH .65
L730	057-10470-10	Ind SMD Pwr CDRH104R 47uH 1A
L731	057-10470-10	Ind SMD Pwr CDRH104R 47uH 1A
Q610	000-10084-71	Xstr BC847BW NPN SOT323
Q720	000-10084-71	Xstr BC847BW NPN SOT323
Q721	000-10442-71	Xstr SI4427BDY PCH MOSFET SO8
R100	038-13100-10	RES 0603 100R 1% 1/10W
R110	038-15100-10	RES 0603 10k 1% 1/10W
R200	038-13100-10	RES 0603 100R 1% 1/10W
R201	038-13100-10	RES 0603 100R 1% 1/10W
R202	038-13100-10	RES 0603 100R 1% 1/10W
R210	038-13100-10	RES 0603 100R 1% 1/10W
R211	038-13100-10	RES 0603 100R 1% 1/10W
R212	038-13100-10	RES 0603 100R 1% 1/10W
R320	036-00000-01	RES 1206 0R 5% 0.25W
R401	038-15820-10	RES 0603 82k 1% 1/10W
R402	038-15820-10	RES 0603 82k 1% 1/10W
R410	038-15150-10	RES 0603 15k 1% 1/10W
R411	038-16150-10	RES 0603 150k 1% 1/10W
R412	038-13100-10	RES 0603 100R 1% 1/10W
R420	038-15330-10	RES 0603 33k 1% 1/10W
R421	038-15220-10	RES 0603 22k 1% 1/10W
R422	038-12470-00	RES 0603 47R 5% 1/10W
R430	038-14220-00	RES 0603 2k2 5% 1/10W
R431	038-14220-00	RES 0603 2k2 5% 1/10W
R441	038-14470-10	Res 0603 4k7 1% 100ppm
R442	038-14470-10	Res 0603 4k7 1% 100ppm
R501	038-15100-10	RES 0603 10k 1% 1/10W
R510	038-13120-00	RES 0603 120R 5% 1/10W
R511	038-10000-00	RES 0603 0R
R600	038-15100-10	RES 0603 10k 1% 1/10W
R601	038-16470-00	RES 0603 470k 5% 1/10W
R602	038-10000-00	RES 0603 0R
R603	038-10000-00	RES 0603 0R
R604	038-10000-00	RES 0603 0R
R605	038-10000-00	RES 0603 0R
R606	038-15100-10	RES 0603 10k 1% 1/10W
R607	038-15100-10	RES 0603 10k 1% 1/10W
R608	038-15100-10	RES 0603 10k 1% 1/10W
R609	038-15100-10	RES 0603 10k 1% 1/10W
R611	038-15100-10	RES 0603 10k 1% 1/10W
R612	038-14470-10	Res 0603 4k7 1% 100ppm

© Tait Electronics Limited November 2007

Ref.	IPN	Description
R701	038-16120-10	RES 0603 120k 1% 1/10W
R710	036-13100-10	RES 0805 100R 1% 1/8W
R720	038-15100-10	RES 0603 10k 1% 1/10W
R721	038-14220-00	RES 0603 2k2 5% 1/10W
R722	038-14470-10	Res 0603 4k7 1% 100ppm
R730	038-12470-00	RES 0603 47R 5% 1/10W
R731	038-12470-00	RES 0603 47R 5% 1/10W
U300	002-10800-00	IC LDO REG LF80C 8V@1A PPAKT/R
U310	002-14931-00	IC L4931CD33 3.3v 250Ma Regso8
U400	002-19120-00	IC TS912ID Cmos R2R Opamp
U500	002-13483-00	IC XCVR RS485 LTD SLEW RATE 3V
U600	002-15595-00	IC 74AHC595 8bit Shiftreg Tsop
U610	002-10126-71	IC SMD DS1868 Dgtl Pot Tsop20
U700	002-13001-00	IC TPA3001 20W Mono PA TSSOP24
	220-01721-04	PCB MFX Head Remote
	219-02914-00	LOOM MFX Remote Head

Ref.	IPN	Description
	302-05263-00	Brkt U Thumb Scrw TMA
	302-10062-00	Brkt Remote Head TM8200
	316-06842-00	Pnl Rear TM8200 MF2
	346-10030-08	Scrw P/T Wn1412 Kc30x08 Zbc
	349-00060-00	Scrw 10G*20 SLFDRL Hex/Poz TMA
	353-05007-00	Wshr Rubber M4*19*1.0 S/A
	354-01052-00	Fsnr Bush PSM SHK-B-M4 Ins
	402-00015-00	MANL f/instr TMAA03-05
	410-01183-02	Pkg Box 220x82x65 TMA
	410-01197-01	Pkg Ins Lg Ctrl Hd TMA

TMAA04-01 Remote Cable Parts

219-02918-00	Cbl Rmt Ctrl Hd Kit, comprising:
219-00025-00	loom 6m shld Bonded+Drain
240-02158-00	Conn Shld RJ45 Shortbody Plg
360-02022-00	Grommet Mic TMA

Grid Reference List

Ref.	PCB	Circuit
C1	D1	D7
C100	J3	E3
C101	L4	E3
C102	J4	E3
C103	J4	E3
C110	L4	F4
C300	M5	G2
C301	N5	G3
C310	M2	G4
C311	N2	G4
C312	M2	G5
C320	P4	D8
C400	L3	G10
C401	L3	G10
C410	M3	G8
C411	M3	G8
C420	L3	G5
C421	L3	G6
C422	K3	F7
C423	K3	F7
C430	M2	G9
C500	L4	F6
C600	L2	C3
C601	L2	B2
C610	K1	C5
C611	K1	C4
C612	J2	C5
C700	F2	C6
C701	G3	C7
C702	E3	C7
C703	E2	C6
C704	G2	C6
C705	F2	B6
C706	E3	B6
C707	E2	B6
C708	G2	A6
C710	E2	D6
C711	F2	D7
C712	E2	D7
C720	F1	D2
C721	G1	D2
C730	E3	B8
C731	G3	A8
C732	F4	B9
C733	G4	B9
C734	F4	B10
C735	F4	B9
D100	K3	F4
		E4
D101	K4	E4

Ref.	PCB	Circuit
		F4
D102	K4	F4
		E4
D103	K4	E5
		F5
D104	K5	E5
D110	L5	F3
D201	K5	E8
D211	K5	C9
D300	N5	G3
D301	M5	G2
D720	G1	D2
D730	F3	B7
D731	G3	B7
E100	J5	E2
E101	H5	E2
E102	K4	F3
E103	K4	E4
E105	H5	F2
E710	F2	D7
E711	E2	D7
E730	E4	B8
E731	G4	B8
J100	H4	E1
J200	P3	E10
J201	B4	C10
L712	D2	D8
L730	E4	B9
L731	G4	B9
MT800	D3	B5
MT801	M3	B5
Q610	K1	D4
Q720	F1	D2
Q721	G2	D3
R100	J3	F2
R110	L4	F3
R200	N4	F8
R201	R3	E8
R202	R2	E8
R203	J5	E1
R210	C3	D9
R211	B3	C9
R212	B4	C9
R213	J5	D1
R320	N4	E8

Ref.	PCB	Circuit
R321	M4	E8
R401	L3	G10
R402	L3	G10
R410	M3	G8
R411	M3	G7
R412	L4	G7
R420	L3	G6
R421	L3	G6
R422	K3	F7
R430	M2	G9
R431	M2	G9
R440	K3	E5
R441	K3	D5
R442	J3	D5
R501	M4	E7
R510	K4	F6
R511	K4	F6
R600	L2	B1
R601	L2	B2
R602	L1	C1
R603	L2	C1
R604	L2	B1
R605	L2	B3
R606	M2	B3
R607	M2	B3
R608	M2	B3
R609	M2	B4
R610	J2	B5
R611	K1	C4
R612	K1	D4
R701	E3	B6
R710	F2	D6
R720	F1	D1
R721	F1	D2
R722	G1	D2
R730	E3	B7
R731	G3	A7
U300	P5	G3
U310	N2	G4
U400	L3	F6
		G7
		1G9
U500	L4	F7
U600	L2	B2
U610	K2	B4
U700	F3	B7

© Tait Electronics Limited November 2007

Board Layout

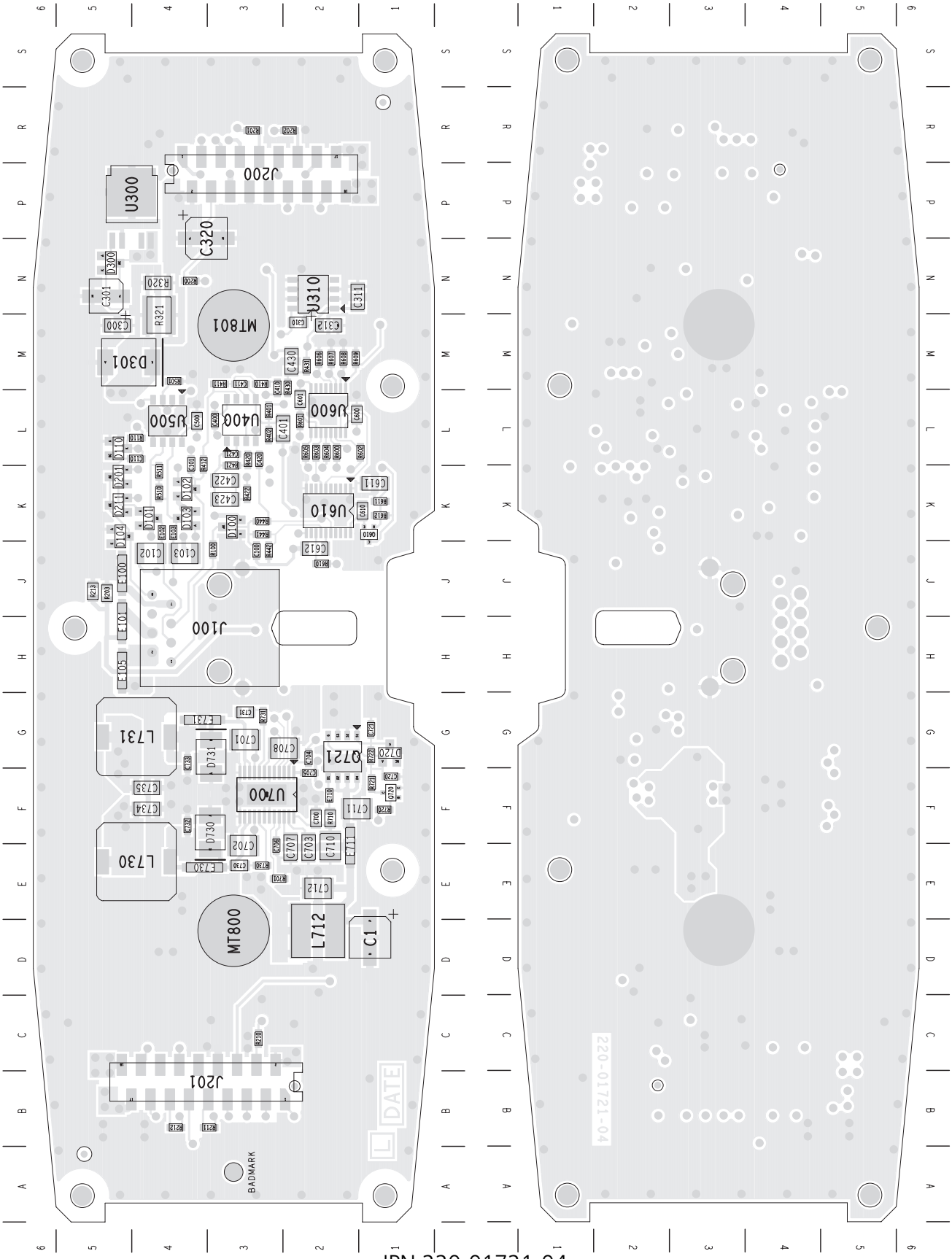

IPN 220-01721-04

© Tait Electronics Limited November 2007

Circuit Diagram

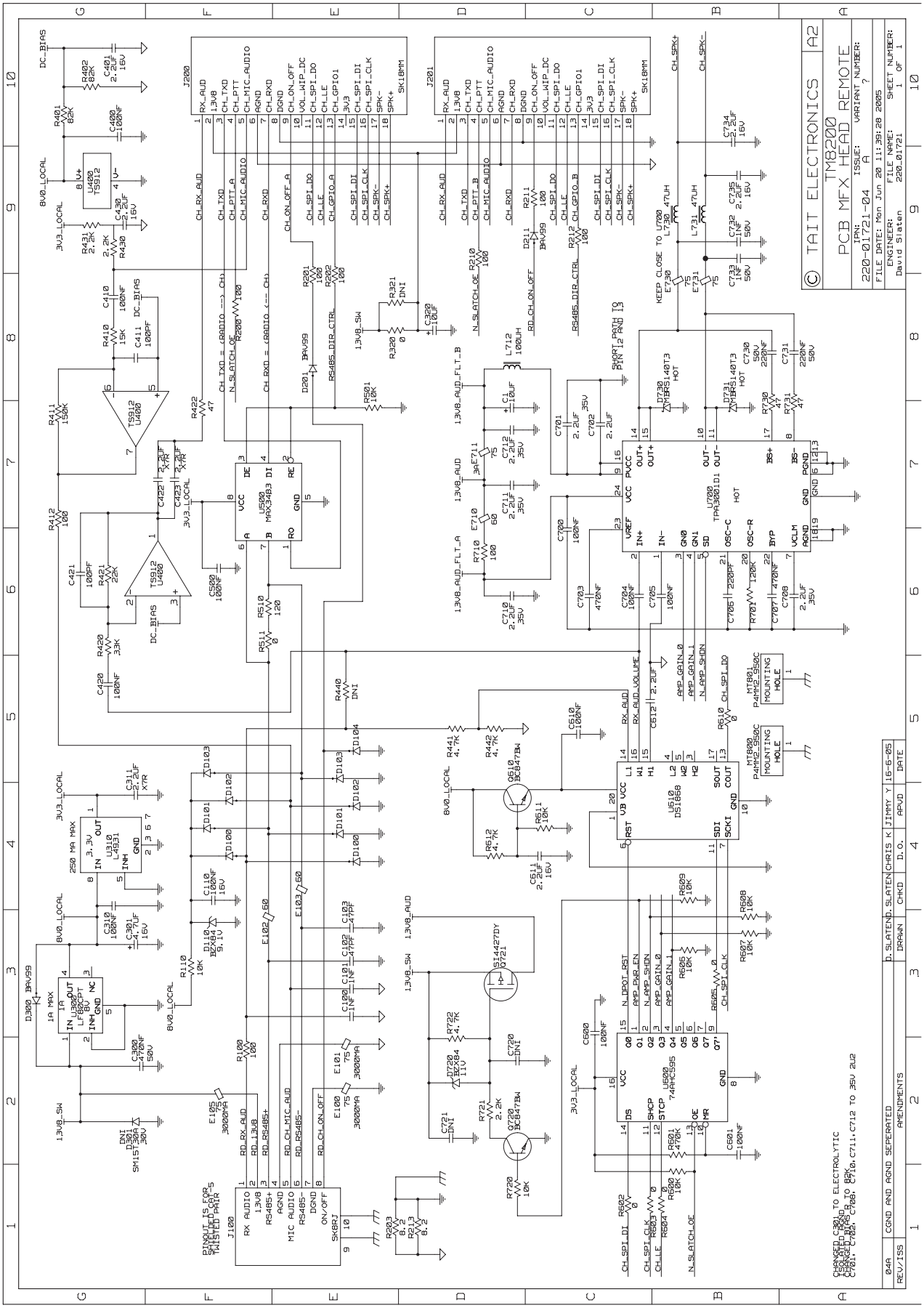

26.4.2 TMAC34-0T Torso Interface (PCB IPN 220-01720-05)

Parts List

Ref.	IPN	Description
C1	018-16100-00	Cap 0603 100n 16v x7r + - 10%
C2	015-07470-20	CAP Cer 1206 4u7 10% 25V X7R
C3	015-06470-01	Cap Cer 1206 470n X7r 20% 50v
C4	018-13100-00	Cap 0603 100p 50v NPO ±5%
C7	015-27100-08	Cap Cer 0805 X7R 1uF 16V 10%
C9	018-13100-00	Cap 0603 100p 50v NPO ±5%
C10	018-16100-00	Cap 0603 100n 16v x7r + - 10%
C13	018-16100-00	Cap 0603 100n 16v x7r + - 10%
C15	018-16100-00	Cap 0603 100n 16v x7r + - 10%
C17	018-16100-00	Cap 0603 100n 16v x7r + - 10%
C101	018-16100-00	Cap 0603 100n 16v x7r + - 10%
C102	015-07470-20	CAP Cer 1206 4u7 10% 25V X7R
C103	015-07470-20	CAP Cer 1206 4u7 10% 25V X7R
C203	018-13270-00	Cap 0603 270p 50v NPO±5%
C207	018-13270-00	Cap 0603 270p 50v NPO±5%
C209	018-13270-00	Cap 0603 270p 50v NPO±5%
C213	018-13270-00	Cap 0603 270p 50v NPO±5%
DS1	008-00014-73	LED Hp Grn Rang PCB Mtg
J1	240-10000-11	Conn SMD 18w Skt M/Match
J2	240-00016-00	Conn RJ45 Shld 8P8C LP RA TH
J3	240-00016-00	Conn RJ45 Shld 8P8C LP RA TH
R1	038-13120-00	RES 0603 120R 5% 1/10W
R2	038-10000-00	RES 0603 0R
R3	038-15820-10	RES 0603 82k 1% 1/10W
R4	038-15820-10	RES 0603 82k 1% 1/10W
R6	038-15220-10	RES 0603 22k 1% 1/10W
R7	038-15100-10	RES 0603 10k 1% 1/10W
R8	038-15820-10	RES 0603 82k 1% 1/10W
R9	038-13100-10	RES 0603 100R 1% 1/10W
R10	038-15100-10	RES 0603 10k 1% 1/10W
R12	038-16100-10	RES 0603 100k 1% 1/10W
R13	038-16100-10	RES 0603 100k 1% 1/10W
R14	036-13560-10	RES 0805 560R 1% 1/8W
R15	038-15820-10	RES 0603 82k 1% 1/10W
R16	038-15100-10	RES 0603 10k 1% 1/10W
R17	038-15220-10	RES 0603 22k 1% 1/10W
R18	038-13220-10	RES 0603 220R 1% 1/10W
R19	038-14120-10	RES 0603 1k2 1% 1/10W
R20	038-10000-00	RES 0603 0R
R21	038-10000-00	RES 0603 0R
R30	038-13390-10	RES 0603 390R 1% 1/10W
R31	038-13390-10	RES 0603 390R 1% 1/10W
R40	036-00000-01	RES 1206 0R 5% 0.25W
R103	038-12100-10	RES 0603 10R 1% 1/10W
R104	038-15100-10	RES 0603 10k 1% 1/10W
R203	038-13100-10	RES 0603 100R 1% 1/10W
R207	038-13100-10	RES 0603 100R 1% 1/10W
R209	038-13100-10	RES 0603 100R 1% 1/10W
R213	038-13100-10	RES 0603 100R 1% 1/10W
R911	036-00000-01	RES 1206 0R 5% 0.25W
R915	036-00000-01	RES 1206 0R 5% 0.25W
R917	038-10000-00	RES 0603 0R
U1	002-19120-00	IC TS912ID Cmos R2R Opamp
U2	002-12523-17	IC LM317l Reg T0252 0.5a
U3	002-13483-00	IC XCVR RS485 LTD SLEW RATE 3V
	219-02882-00	Loom Control Head TMA
	219-02950-00	CBL MFX Remote Kit Gnd Lead
	220-01720-05	PCB MFX Radio Remote
	302-10063-01	Brkt PCB Remote TM8200 Body
	302-50002-01	Bung RJ45 MFO
	316-06843-00	Pnl Frt Remote TM8200 MF0
	346-10030-08	Scrw P/T Wn1412 Kc30x08 Zbc
	349-02062-00	Scrw M3*8 T/T P/T ContiR

Grid Reference List

Ref.	PCB	Circuit
C1	1:J2	H7
C2	1:K1	J6
C3	1:D2	H3
C4	1:J1	H8
C5	2:J2	G7
C6	1:K1	J7
C7	1:J2	G7
C8	2:K2	J9
C9	1:K2	G8
C10	1:N2	G9
C13	1:N2	G9
C15	2:L2	H10
C17	2:L2	H8
C102	1:D1	H4
C103	1:E2	D7
C203	1:J2	D6
C207	1:H2	D5
C213	1:H1	D6
DS1	1:F2	J5
D1	2:J2	G4
D2	1:H2	E5
D3	2:H2	G3
J1	1:H2	E3
J2	1:N2	E12
J3	1:L2	G12
J4	1:M2	D9
MT1	1:R2	F12
Q1	2:G2	G4
Q2	2:G2	F5
R1	2:N2	E10
R2	2:J2	G7
R3	1:J1	J6
R4	1:J1	J6
R5	2:H2	G4
R6	1:J1	H7
R7	1:G2	E5
R8	1:J1	J8
R9	2:L2	J9
R10	1:K2	G8
R11	2:G2	F4
R12	1:N2	G9
R13	1:N2	G9
R14	1:F2	H5
R15	2:L2	H9
R16	1:H2	D5
R17	2:L2	H9
R18	1:D2	H4
R19	1:E2	H4
R20	2:L2	J10
R21	1:N2	G10
R22	2:H2	G4
R23	2:G2	G5
R24	2:G2	F5
R30	1:F2	D10
R31	1:E2	E9
R40	2:N2	F11
R103	1:G2	E7
R104	1:G2	E7
R203	1:J2	E6
R207	1:J2	E6
R209	1:H2	E6
R213	1:H2	E6
R820	2:L2	H10
R821	1:N2	G10
R900	1:F2	E9
R901	1:E2	E9
R910	2:J2	E10
R911	2:L2	F11
R912	1:H2	E5
R915	2:M2	G12
R916	2:N2	F11
R917	1:N2	F11
R918	2:M2	G11
R920	1:D2	J4
U1	1:K1	G8
		J8
		J5
U2	1:D2	J4
U3	1:F2	E8

© Tait Electronics Limited November 2007

Board Layout

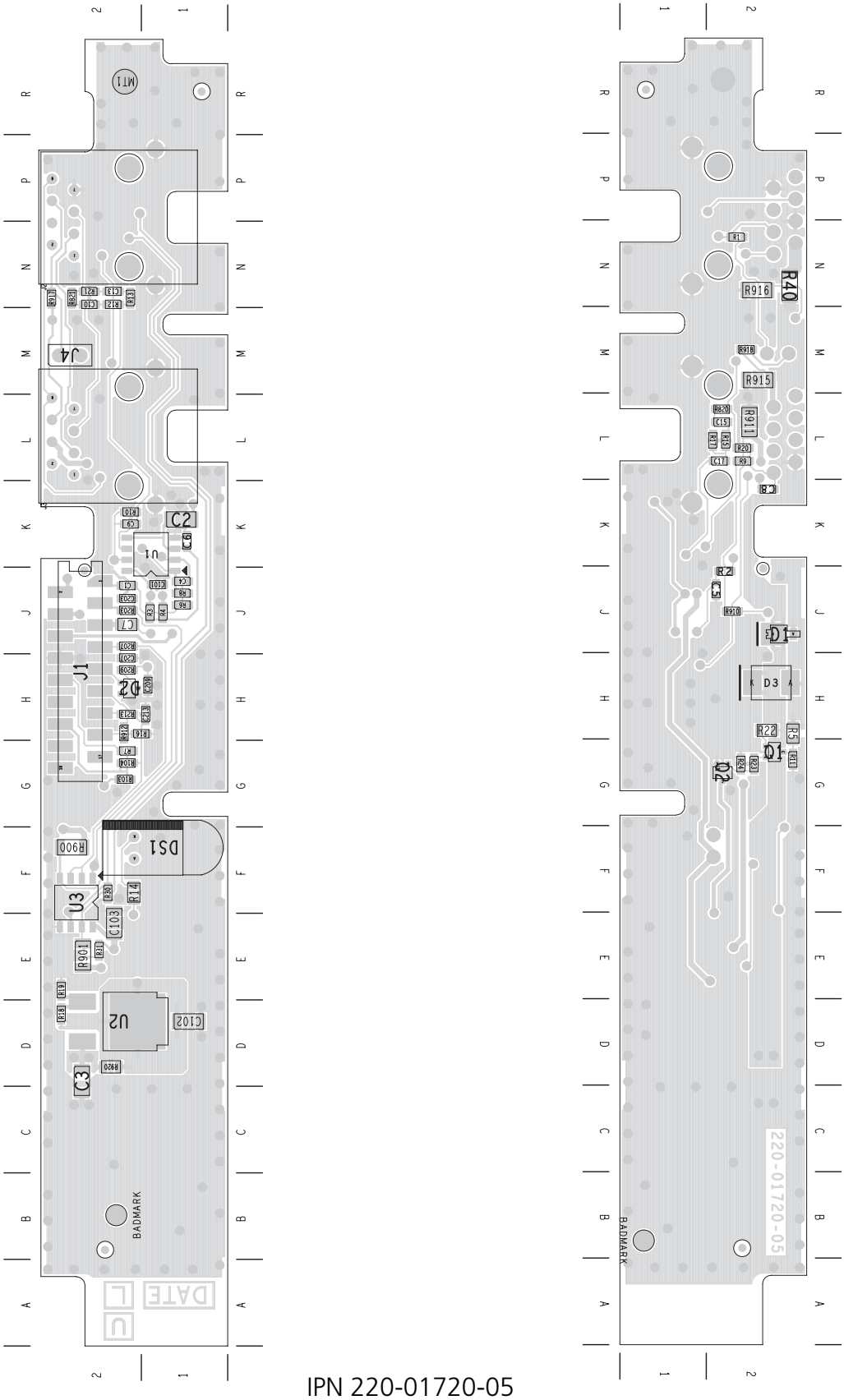

IPN 220-01720-05

Circuit Diagram

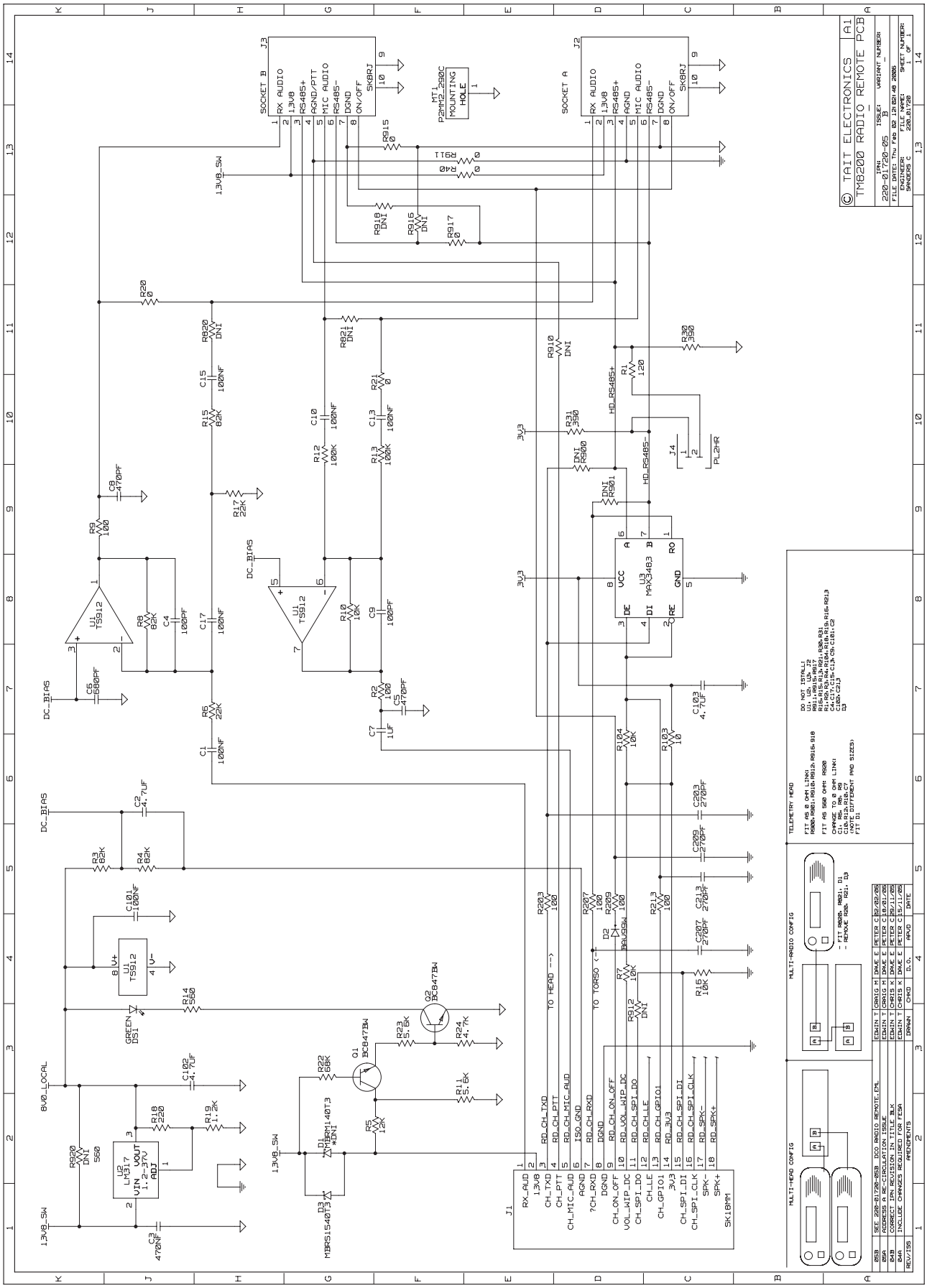

© Tait Electronics Limited November 2007

27 TMAA03-31 Control Head Interface Box

The TMAA03-31 control head interface box is used as part of the installation of dual-head radio systems.

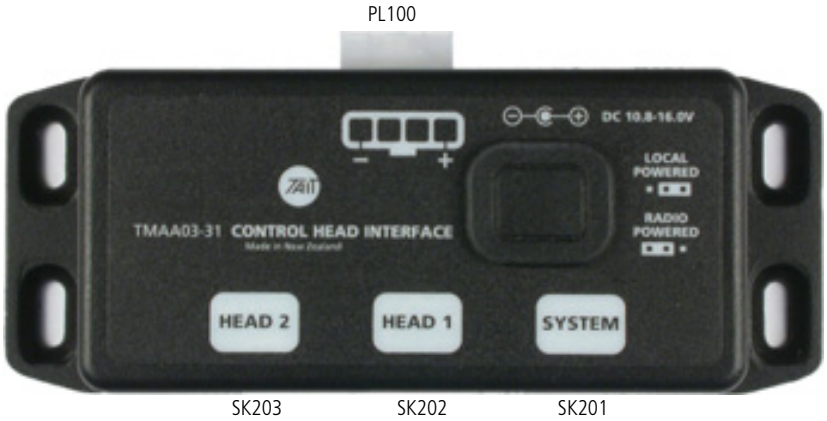

Not illustrated
Interface box mounting washers and screws

The TMAA03-31interface box is used with the following kits:

- TMAA11-06 TM8250/TM8255 extended remote upgrade kit (installation instructions 402-00047-**xx**)
- TMAA11-07 TM8250/TM8255 extended remote dual-head upgrade kit, with a standard microphone (installation instructions 402-00052-**xx**)
- TMAA11-08 TM8250/TM8255 extended remote dual-head upgrade kit, with a keypad microphone (installation instructions 402-00052-**xx**)
- TMAA11-09 TM8260 dual-head upgrade kit, with a keypad microphone (installation instructions 402-00043-**xx**).

© Tait Electronics Limited November 2007

27.1 Interface Specification

The following table and diagram summarizes the signals used for all the connectors on the control head interface box.

Table 27.1 Power connector PL100—pins and signals

Pinout	Pin	Signal name	Description
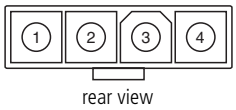	1	AGND	Analog ground
	2	—	Not connected
	3	—	Not connected
	4	13V8_BATT	13V8 power input

Table 27.2 Sockets SK201, SK202, SK203—pins and signals

	Pin	Signal name	Description
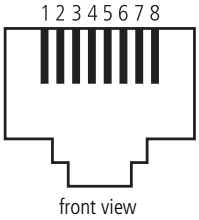	1	RD_RX_AUD	Receive audio
	2	RD_13V8_SW	Switched 13V8 supply from radio
	3	RD_RS485+	Data
	4	AGND	Analog ground
	5	MIC_AUD	Microphone audio
	6	RD_RS485-	Data
	7	DGND	Digital ground
	8	RD_CHC_ON_OFF	Radio control head on/off

© Tait Electronics Limited November 2007

27.2 PCB Information

27.2.1 TMAA03-31 Parts List (PCB IPN 220-02174-03)

Ref.	IPN	Description
C1	018-13100-00	CAP 100p 50V NPO ±5% 0603
C2	015-06470-01	CAP cer 470n 50V 20% 1206 X7R
C3	015-27220-05	CAP cer 2u2 25V 10% 0805 X7R
C4	018-14100-00	CAP 1n 50V ±10% 0603 X7R
C5	018-14100-00	CAP 1n 50V ±10% 0603 X7R
C7	015-06470-01	CAP cer 470n 50V 20% 1206 X7R
C8	018-16100-00	CAP 100n 16V ±10% 0603 X7R
C11	018-14100-00	CAP 1n 50V ±10% 0603 X7R
C12	014-07470-05	CAP tant 4u7 16V 10% A
C13	018-14100-00	CAP 1n 50V ±10% 0603 X7R
C14	018-14100-00	CAP 1n 50V ±10% 0603 X7R
C15	018-16100-00	CAP 100n 16V ±10% 0603 X7R
C16	018-16100-00	CAP 100n 16V ±10% 0603 X7R
C20	015-27100-08	CAP cer 1uF 16V 10% 0805 X7R
C24	018-14100-00	CAP 1n 50V ±10% 0603 X7R
C25	018-14100-00	CAP 1n 50V ±10% 0603 X7R
C27	018-13100-00	CAP 100p 50V NPO ±5% 0603
C30	018-13100-00	CAP 100p 50V NPO ±5% 0603
C31	018-14100-00	CAP 1n 50V ±10% 0603 X7R
C32	018-13100-00	CAP 100p 50V NPO ±5% 0603
C36	018-16100-00	CAP 100n 16V ±10% 0603 X7R
C38	018-16100-00	CAP 100n 16V ±10% 0603 X7R
C40	018-13100-00	CAP 100p 50V NPO ±5% 0603
C41	018-13100-00	CAP 100p 50V NPO ±5% 0603
C50	018-13100-00	CAP 100p 50V NPO ±5% 0603
D1	001-10153-00	DIODE SM15T30A Transil SMC
D2	001-10054-02	DIODE BAT54AW SOT323
D4	001-10084-51	DIODE BZX84C5V1 Zen SOT23
D5	001-10000-99	DIODE BAV99 dual sw SOT23
D6	001-10841-50	DIODE BZX84C15V Zen SOT23
D8	001-10084-91	DIODE BZX84C9V1 Zen SOT23
D10	001-10208-60	DIODE DALSC208SC6 Array
E1	057-10081-06	IND 1806 BLM41P750S EMI suppn
E2	057-10081-06	IND 1806 BLM41P750S EMI suppn
E4	057-10081-06	IND 1806 BLM41P750S EMI suppn
E8	057-10081-06	IND 1806 BLM41P750S EMI suppn
E9	057-10081-06	IND 1806 BLM41P750S EMI suppn
F1	265-10300-10	FUSE 1206 3A 63V
IC1	000-10409-00	XSTR SMD BTS409L Mfet sw
IC2	002-10800-00	IC LF80C 8V@1A LDO rgltr
IC7	002-19120-00	IC TS912ID CMOS R2R OP-Amp

Ref.	IPN	Description
IC1	000-10409-00	XSTR SMD BTS409L Mfet sw
IC2	002-10800-00	IC LF80C 8V@1A LDO rgltr
IC7	002-19120-00	IC TS912ID CMOS R2R OP-Amp
J1	240-02021-01	SKT DC jack 2.5mm RA 5A@16VDC
PL100	240-00027-01	CONN 4wy pwr male
Q1	000-10008-47	XSTR SMD BC847B NPN SOT23
R1	038-15470-10	RES 0603 47k 1% 1/10W
R2	038-14470-10	RES 0603 4k7 1% 1/10W
R3	038-13100-10	RES 0603 100R 1% 1/10W
R4	038-13100-10	RES 0603 100R 1% 1/10W
R5	038-15470-10	RES 0603 47k 1% 1/10W
R6	038-13100-10	RES 0603 100R 1% 1/10W
R7	038-15470-10	RES 0603 47k 1% 1/10W
R8	038-13100-10	RES 0603 100R 1% 1/10W
R9	038-14100-10	RES 0603 1k0 1% 1/10W
R10	038-16100-10	RES 0603 100k 1% 1/10W
R11	038-16100-10	RES 0603 100k 1% 1/10W
R13	038-14100-10	RES 0603 1k0 1% 1/10W
R14	038-16100-10	RES 0603 100k 1% 1/10W
R17	038-16100-10	RES 0603 100k 1% 1/10W
R23	038-16100-10	RES 0603 100k 1% 1/10W
R45	038-15220-10	RES 0603 22k 1% 1/10W
R47	036-13220-10	RES 0805 220R 1% 1/8W
R48	036-13220-10	RES 0805 220R 1% 1/8W
SA	938-10001-01	SMT Alloy Lead Free (sac)
SK201	240-00016-00	CONN RJ45 shld 8P8C lpfl RA TH
SK202	240-00016-00	CONN RJ45 shld 8P8C lpfl RA TH
SK203	240-00016-00	CONN RJ45 shld 8P8C lpfl RA TH
W1	240-00020-59	HDR 3wy 1row PCB mtg
	220-02174-03	PCB CHD I/F box
	330-02174-01	STEN top Splitter Box
	369-02054-00	TAPE slfadh 12x6.4mm 15m roll
	302-40078-00	BOX CHD interface mach Dcast
	365-01807-00	LBL control hd interface TMAA03-31
	302-50002-01	BUNG RJ45 TMA
	349-00060-00	SCRW #10x20 hex Pz blk drl
	353-00010-32	WSHR M5 sprf ext BZ
	319-30111-00	SPCR 15mm NYL M3 Fem Hex 5.5mm
	349-02062-00	SCRW M3x8 P/H T10 BZ T/T CRL

© Tait Electronics Limited November 2007

27.2.2 Control Head Interface Box Board Layouts (top side)

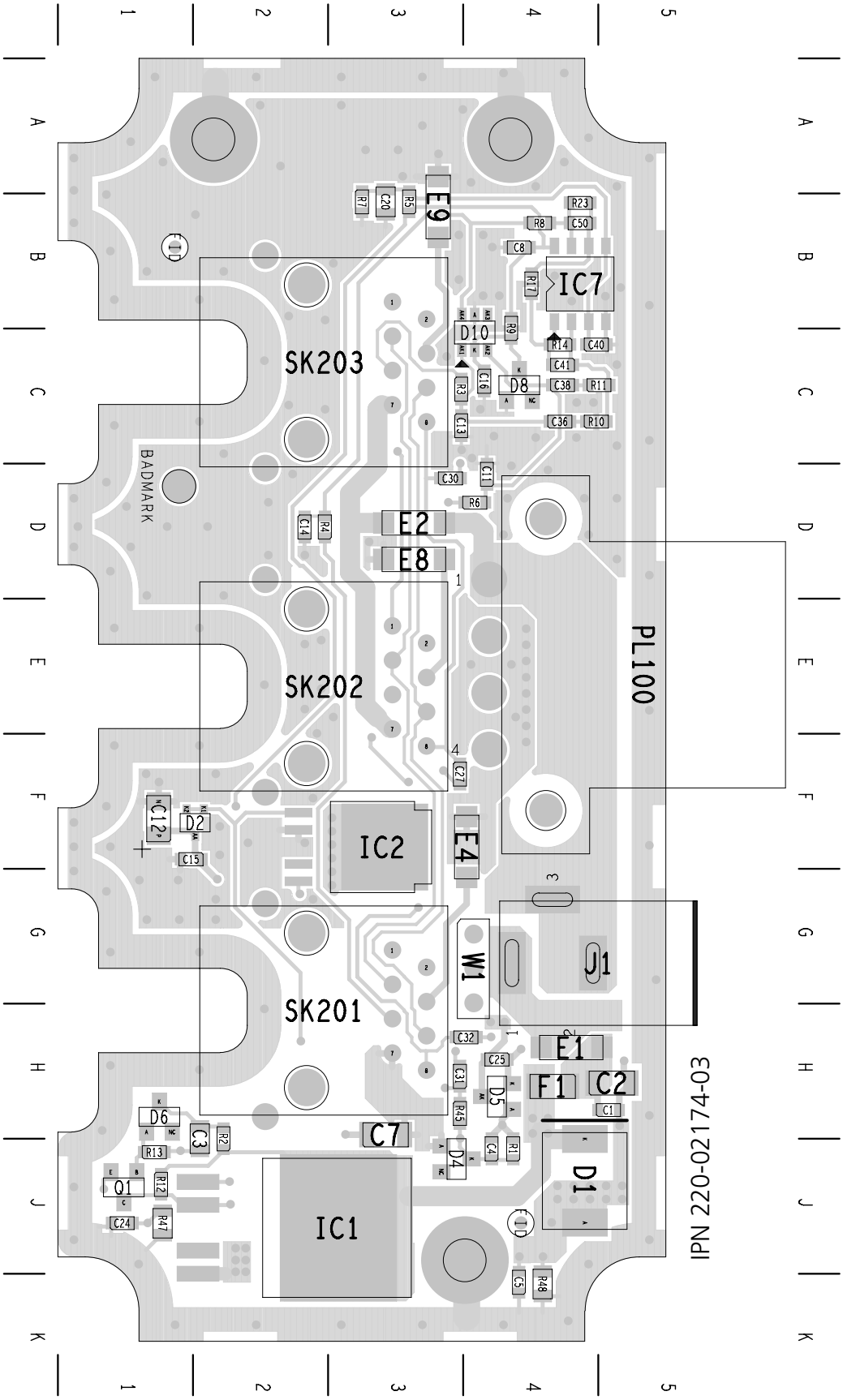

© Tait Electronics Limited November 2007

27.2.3 Control Head Interface Box Board Layouts (bottom side)

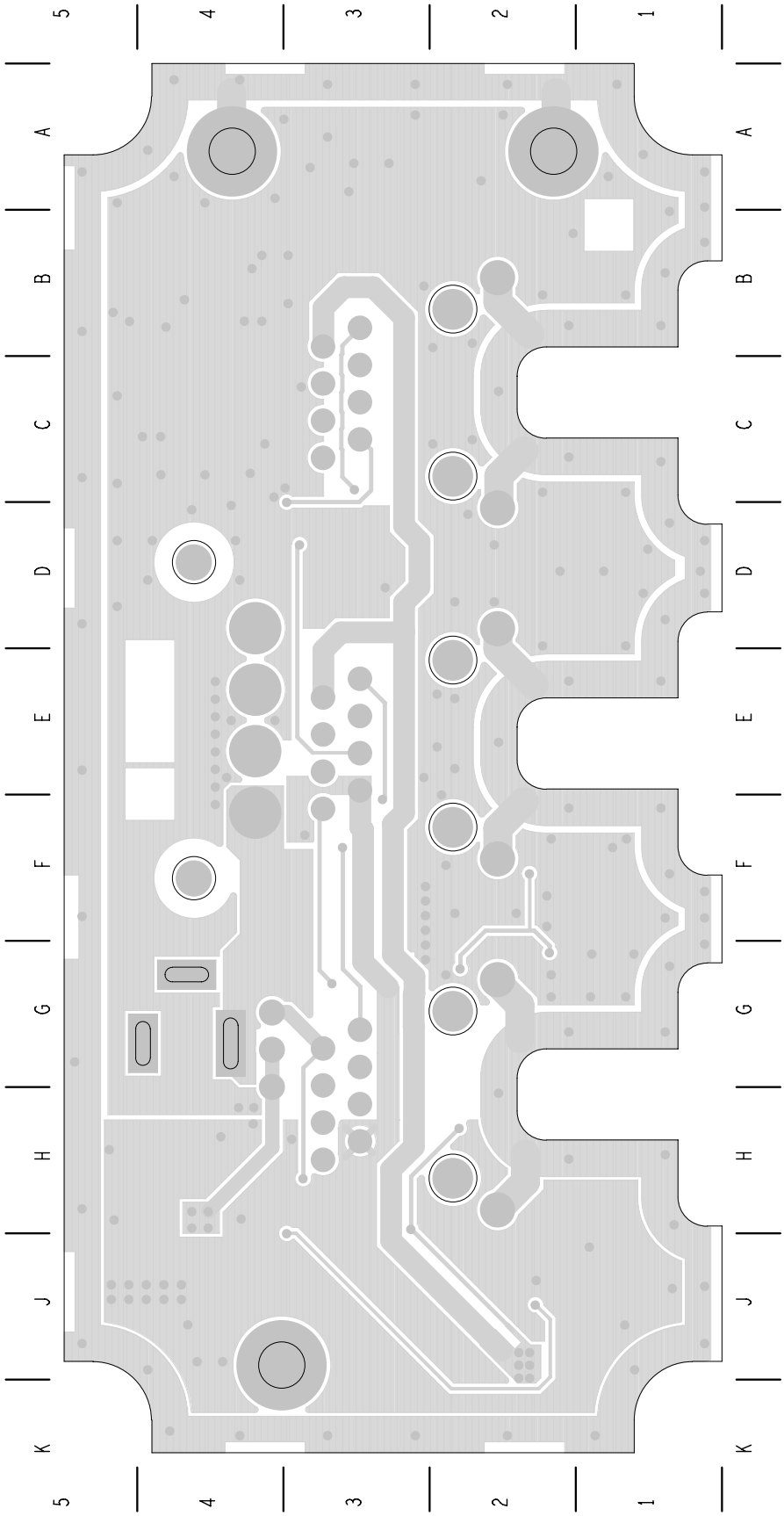

IPN 220-02174-03

27.2.4 Control Head Interface Box Circuit Diagram

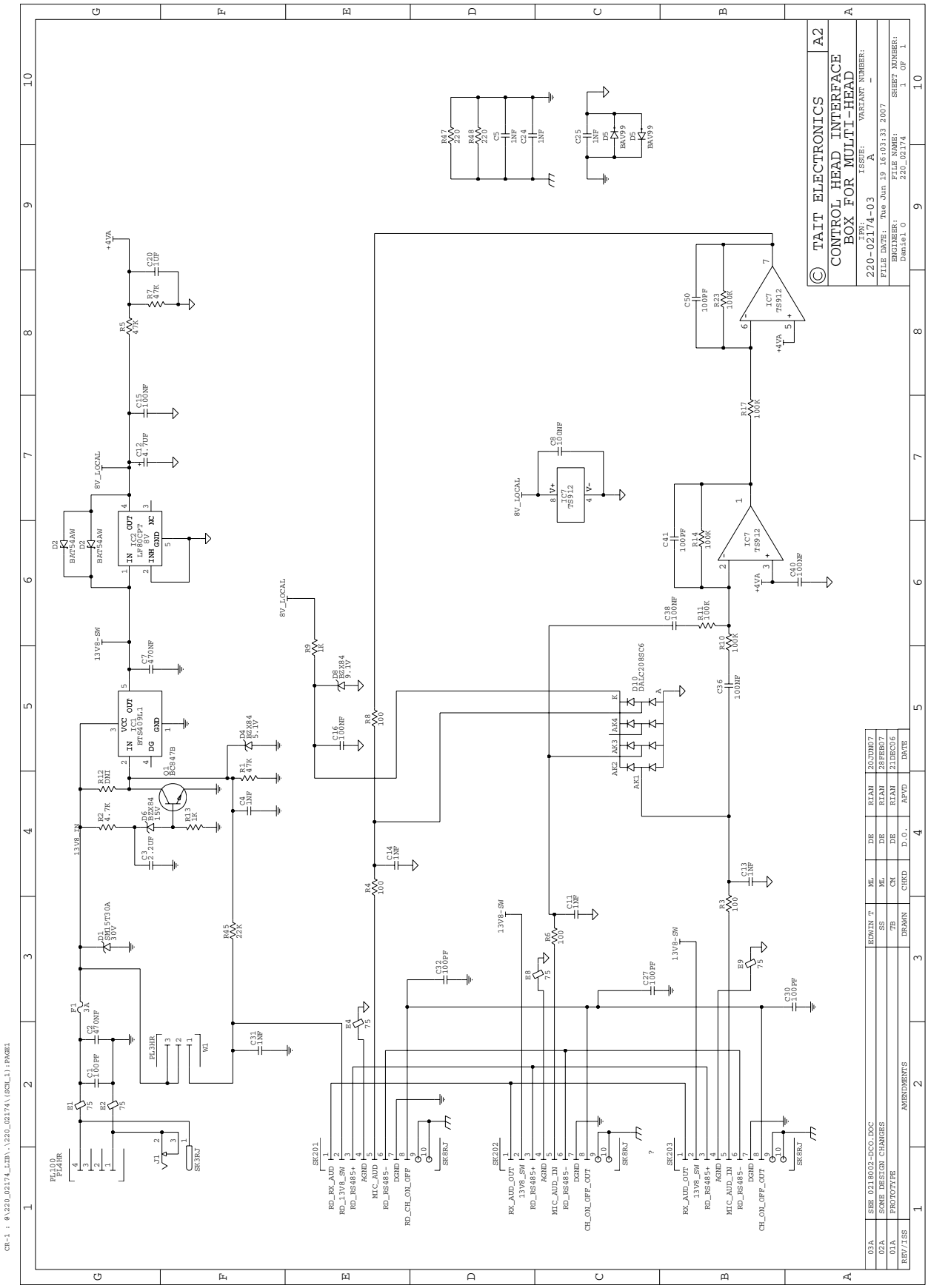

© Tait Electronics Limited November 2007

28 TMAA03-34 Extender Box

The TMAA03-34 extender box is used in the installation of extended long-run remote radio systems, and provides processing and protection of signals over long distances.

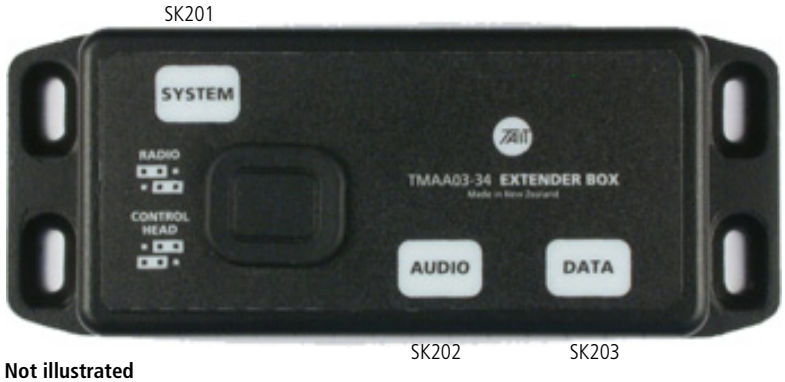

Not illustrated
Extender box mounting washers and screws

The TMAA03-34 extender box is used in the following kits:

- TMAA11-06 TM8250/TM8255 extended remote upgrade kit (installation instructions 402-00047-**xx**)
- TMAA11-07 TM8250/TM8255 extended remote dual-head upgrade kit, with a standard microphone (installation instructions 402-00052-**xx**)
- TMAA11-08 TM8250/TM8255 extended remote dual-head upgrade kit, with a keypad microphone (installation instructions 402-00052-**xx**).

28.1 Interface Specification

The following table and diagram summarizes the signals used on SK201('SYSTEM').

Table 28.1 Socket S201—pins and signals

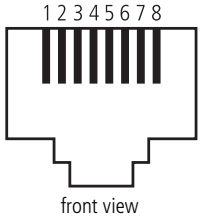

Pin	Signal name	Description
1	RD_RX_AUD	Receive audio
2	RD_13V8_SW	Switched 13V8 supply from radio
3	RD_RS485+	Data
4	AGND	Analog ground
5	MIC_AUD	Microphone audio
6	RD_RS485-	Data
7	DGND	Digital ground
8	RD_CHC_ON_OFF	Radio control head on/off

© Tait Electronics Limited November 2007

28.2 PCB Information

28.2.1 TMAA03-34 Parts List (PCB IPN 220-02180-02)

Ref.	IPN	Description
C1	018-13270-00	CAP 270p 50V NPO ±5% 0603
C2	018-13270-00	CAP 270p 50V NPO ±5% 0603
C3	015-06470-01	CAP cer 470n 50V 20% 1206 X7R
C4	018-13270-00	CAP 270p 50V NPO ±5% 0603
C5	015-06470-01	CAP cer 470n 50V 20% 1206 X7R
C6	018-13270-00	CAP 270p 50V NPO ±5% 0603
C7	018-16100-00	CAP 100n 16V ±10% 0603 X7R
C8	018-13270-00	CAP 270p 50V NPO ±5% 0603
C9	018-16100-00	CAP 100n 16V ±10% 0603 X7R
C10	018-14100-00	CAP 1n 50V ±10% 0603 X7R
C11	014-07470-05	CAP tant 4u7 16V 10% A
C12	018-16100-00	CAP 100n 16V ±10% 0603 X7R
C13	018-14220-00	CAP 2n2 50V 10% 0603 X7R
C14	018-16100-00	CAP 100n 16V ±10% 0603 X7R
C15	018-13270-00	CAP 270p 50V NPO ±5% 0603
C16	018-13270-00	CAP 270p 50V NPO ±5% 0603
C17	015-27100-08	CAP cer 1uF 16V 10% 0805 X7R
C18	018-14220-00	CAP 2n2 50V 10% 0603 X7R
C19	018-16100-00	CAP 100n 16V ±10% 0603 X7R
C20	018-13270-00	CAP 270p 50V NPO ±5% 0603
C21	018-16100-00	CAP 100n 16V ±10% 0603 X7R
C22	018-16100-00	CAP 100n 16V ±10% 0603 X7R
C23	018-13270-00	CAP 270p 50V NPO ±5% 0603
C24	018-14220-00	CAP 2n2 50V 10% 0603 X7R
C25	018-16100-00	CAP 100n 16V ±10% 0603 X7R
C26	018-16100-00	CAP 100n 16V ±10% 0603 X7R
C27	018-13270-00	CAP 270p 50V NPO ±5% 0603
C28	015-27100-08	CAP cer 1uF 16V 10% 0805 X7R
C29	018-14220-00	CAP 2n2 50V 10% 0603 X7R
C30	018-16100-00	CAP 100n 16V ±10% 0603 X7R
C31	018-13270-00	CAP 270p 50V NPO ±5% 0603
C32	018-13270-00	CAP 270p 50V NPO ±5% 0603
C33	018-16100-00	CAP 100n 16V ±10% 0603 X7R
C34	015-27100-08	CAP cer 1uF 16V 10% 0805 X7R
C35	015-27100-08	CAP cer 1uF 16V 10% 0805 X7R
C36	015-27100-08	CAP cer 1uF 16V 10% 0805 X7R
C37	015-27100-08	CAP cer 1uF 16V 10% 0805 X7R
C38	015-27100-08	CAP cer 1uF 16V 10% 0805 X7R
C39	015-27100-08	CAP cer 1uF 16V 10% 0805 X7R
C40	015-27100-08	CAP cer 1uF 16V 10% 0805 X7R
C41	015-27100-08	CAP cer 1uF 16V 10% 0805 X7R
C42	018-13270-00	CAP 270p 50V NPO ±5% 0603
C43	018-13270-00	CAP 270p 50V NPO ±5% 0603
C44	018-13270-00	CAP 270p 50V NPO ±5% 0603
C45	018-13270-00	CAP 270p 50V NPO ±5% 0603
C46	018-16100-00	CAP 100n 16V ±10% 0603 X7R
C47	018-13270-00	CAP 270p 50V NPO ±5% 0603
C49	018-14100-00	CAP 1n 50V ±10% 0603 X7R
D1	001-10000-99	DIODE BAV99 dual sw SOT23
D2	001-10054-02	DIODE BAT54AW SOT323
D3	001-10000-99	DIODE BAV99 dual sw SOT23
D4	001-10000-99	DIODE BAV99 dual sw SOT23
D5	001-10153-00	DIODE SM15T30A Transil SMC
D6	001-10084-91	DIODE BZX84C9V1 Zen SOT23
D7	001-10084-91	DIODE BZX84C9V1 Zen SOT23
D8	001-10084-91	DIODE BZX84C9V1 Zen SOT23
D9	001-10084-91	DIODE BZX84C9V1 Zen SOT23
D10	001-10084-91	DIODE BZX84C9V1 Zen SOT23
E1	057-10081-06	IND 1806 BLM41P750S EMI suppn
E2	057-10047-02	IND 0603 BLM18HD471S 0.1A
E3	057-10047-02	IND 0603 BLM18HD471S 0.1A
E4	057-10081-06	IND 1806 BLM41P750S EMI suppn
E6	057-10047-02	IND 0603 BLM18HD471S 0.1A
IC2	002-10800-00	IC LF80C 8V@1A LDO rgltr
IC6	002-19120-00	IC TS912ID CMOS R2R OP-Amp
IC7	002-19120-00	IC TS912ID CMOS R2R OP-Amp
IC8	002-19120-00	IC TS912ID CMOS R2R OP-Amp
LIN		
K1	240-00020-59	HDR 3wy 1row PCB mtg
LINK2	240-00020-59	HDR 3wy 1row PCB mtg
LINK11	240-04020-62	SKT 2wy 0.1" rcpt shorting lnk
LINK21	240-04020-62	SKT 2wy 0.1" rcpt shorting lnk
R1	038-13100-10	RES 0603 100R 1% 1/10W
R2	038-13100-10	RES 0603 100R 1% 1/10W
R3	038-13100-10	RES 0603 100R 1% 1/10W
R4	038-16100-10	RES 0603 100k 1% 1/10W
R5	038-15680-10	RES 0603 68k1 1% 1/10W
R6	038-15470-10	RES 0603 47k 1% 1/10W
R7	038-15270-20	RES 0603 27k 0.5% 1/10W
R8	038-16100-10	RES 0603 100k 1% 1/10W
R9	038-15470-10	RES 0603 47k 1% 1/10W
R10	038-15470-10	RES 0603 47k 1% 1/10W
R11	038-15470-10	RES 0603 47k 1% 1/10W
R12	038-16100-10	RES 0603 100k 1% 1/10W
R13	038-16100-10	RES 0603 100k 1% 1/10W
R14	038-16100-10	RES 0603 100k 1% 1/10W
R15	038-15470-10	RES 0603 47k 1% 1/10W
R16	038-14100-10	RES 0603 1k0 1% 1/10W
R17	038-15470-10	RES 0603 47k 1% 1/10W

© Tait Electronics Limited November 2007

Ref.	IPN	Description
R18	038-16100-10	RES 0603 100k 1% 1/10W
R19	038-15270-20	RES 0603 27k 0.5% 1/10W
R20	038-15470-10	RES 0603 47k 1% 1/10W
R21	038-15680-10	RES 0603 68k1 1% 1/10W
R22	038-14220-10	RES 0603 2K2 1% 1/10W
R23	038-15270-20	RES 0603 27k 0.5% 1/10W
R24	038-15470-10	RES 0603 47k 1% 1/10W
R25	038-14220-10	RES 0603 2K2 1% 1/10W
R26	038-16470-00	RES 0603 470k 5% 1/10W
R27	038-15470-10	RES 0603 47k 1% 1/10W
R28	038-13220-10	RES 0603 220R 1% 1/10W
R29	038-13220-10	RES 0603 220R 1% 1/10W
R30	038-16100-10	RES 0603 100k 1% 1/10W
R31	038-16100-10	RES 0603 100k 1% 1/10W
R32	038-14220-10	RES 0603 2K2 1% 1/10W
R33	038-14220-10	RES 0603 2K2 1% 1/10W
R34	038-16100-10	RES 0603 100k 1% 1/10W
R35	038-16100-10	RES 0603 100k 1% 1/10W
R36	038-16100-10	RES 0603 100k 1% 1/10W
R37	038-16100-10	RES 0603 100k 1% 1/10W
R38	038-16100-10	RES 0603 100k 1% 1/10W
R39	038-16100-10	RES 0603 100k 1% 1/10W

Ref.	IPN	Description
R40	038-13220-10	RES 0603 220R 1% 1/10W
R41	038-13220-10	RES 0603 220R 1% 1/10W
R42	038-10000-00	RES 0603 0R 5% 1/10W
SA	938-10001-01	SMT Alloy Lead Free (sac)
SK201	240-00016-00	CONN RJ45 shld 8P8C lpfl RA TH
SK202	240-00016-00	CONN RJ45 shld 8P8C lpfl RA TH
SK203	240-00016-00	CONN RJ45 shld 8P8C lpfl RA TH
U1	002-10623-00	IC AD623 OP-Amp R/R MSOP8
	220-02180-02	PCB extender box
	369-02054-00	TAPE slfadh 12x6.4mm 15m roll
	302-40079-00	BOX extender mach Dcast

© Tait Electronics Limited November 2007

28.2.2 Extender Box Board Layouts (top side)

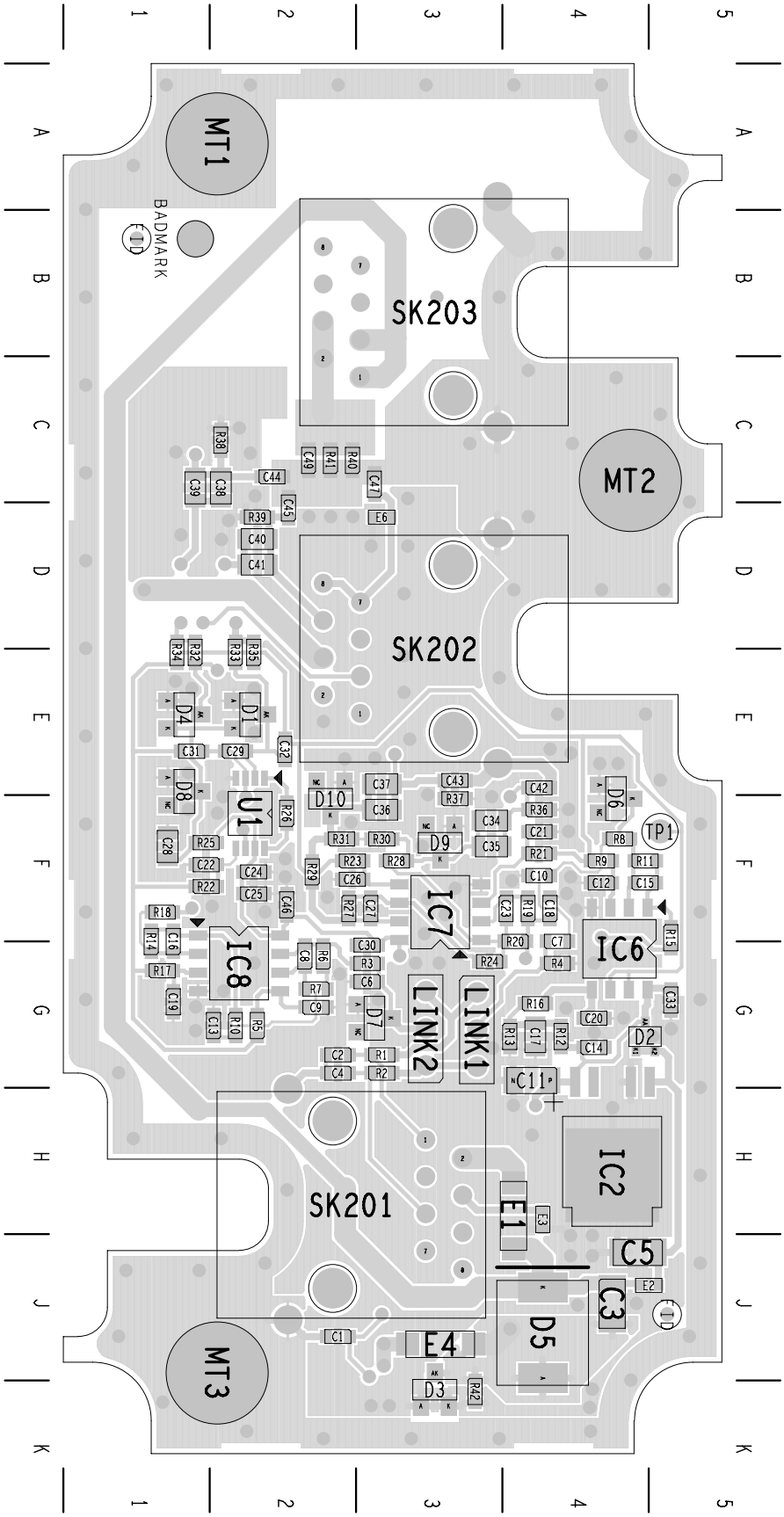

IPN 220-02180-02

© Tait Electronics Limited November 2007

28.2.3 Extender Box Board Layouts (bottom side)

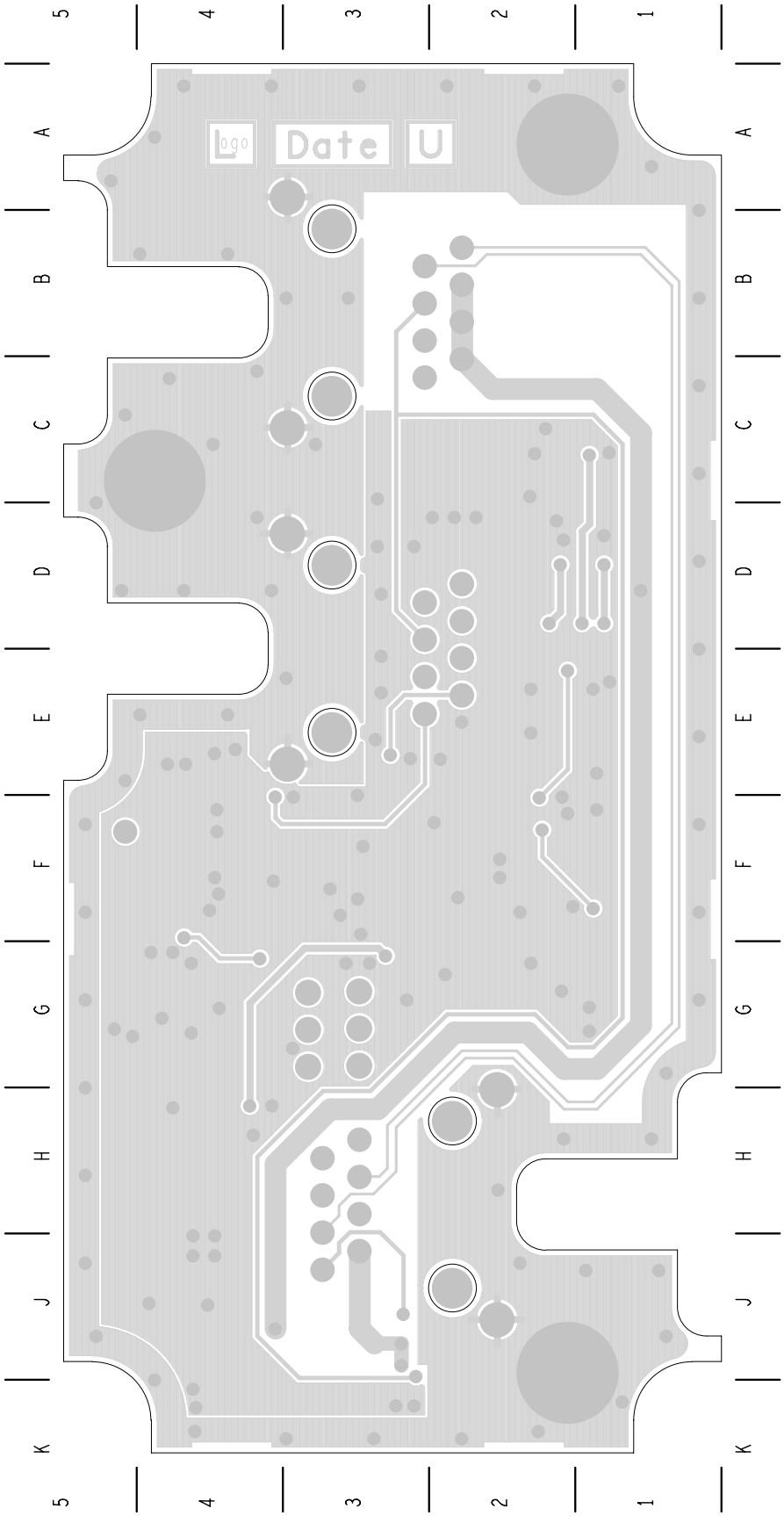

IPN 220-02180-02

28.2.4 Extender Box Circuit Diagram

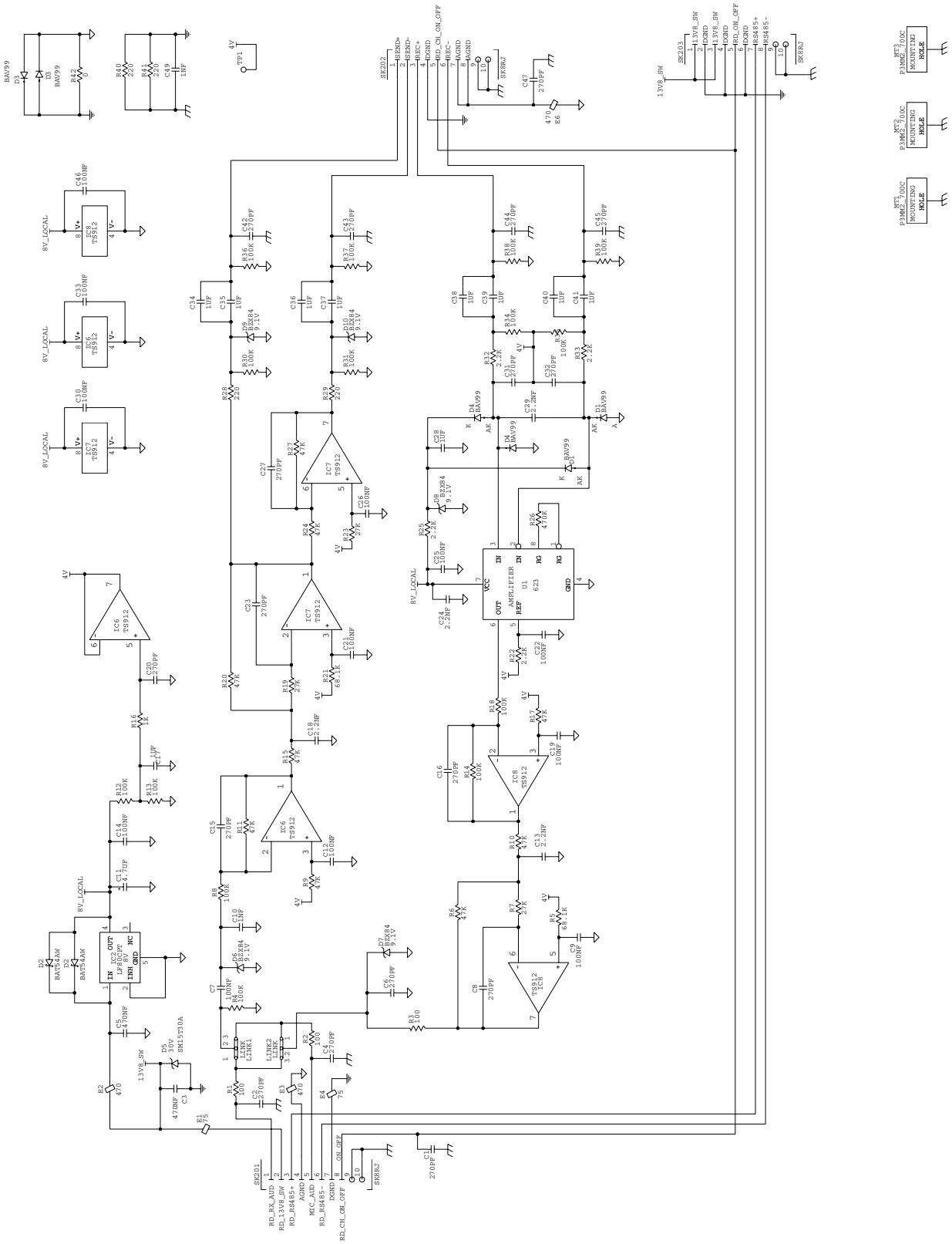

© Tait Electronics Limited November 2007

29 TMAA04-04 Crossband Linking Cable

The TMAA04-04 crossband linking cable is used to connect the auxiliary connectors of two radios configured as a crossband repeater. Components in the TMAA04-04 are optomized for voice applications.

Important The radio does not meet the IP54 protection standard once the auxiliary connector rubber bung has been removed and a crossband linking cable has been installed. Care must be taken when the radio is being operated in an environment where there is water, dust or other environmental hazards.

29.1 Installation

1. Remove the rubber bung that covers the auxiliary connector on each of the radios.
2. Plug each end of the crossband linking cable into the auxiliary connector on each radio.

29.2 Radio Programming

After the transmit and receive channels have been programmed for both radios, settings in the following forms must also be configured:

- PTT form (refer to Table 29.1)
- Programmable I/O form — Digital tab (refer to Table 29.2)
- Programmable I/O form — Audio tab (refer to Table 29.3).

If a repeater transmit tail is required, settings in the following forms must be configured in both radios:

- PTT form (TM8100 radios only) (refer to Table 29.4)
- Basic Settings form—Subaudible Signalling tab (TM8200 radios and optional for TM8100 radios) (refer to Table 29.5 and Table 29.6).

Some of the settings shown in the tables are default settings and may not need to be changed. In all cases, refer to the online help of the programming application for more information.

Crossband Settings in the PTT Form

The following table shows the crossband linking settings required in the External PTT (1) tab of the PTT form.

Table 29.1 Crossband settings in the PTT form, External PTT (1) tab

Field		Setting
Advanced EPTT1	PTT Transmission Type	Voice
	Audio Source	Audio Tap In

© Tait Electronics Limited November 2007

Programmable I/O Form—Digital Tab

The following table shows the crossband linking settings required in the Digital tab of the Programmable I/O form.

Table 29.2 Crossband settings in the Programmable I/O form, Digital tab

Pin	Direction	Label	Action	Active	Debounce	Signal State	Mirrored To
AUX_GPI1	Input	PTT_INS	External PTT 1	Low	10	None	None
AUX_GPIO5	Output	BUSY	Busy Status[1]	Low	None	None	None

1. To transmit only when the signalling is valid, set this field to **Signalling Audio Mute Status**.

Programmable I/O Form—Audio Tab

The following table shows the crossband linking settings required in the Audio tab of the Programmable I/O form.

Table 29.3 Crossband settings in the Programmable I/O form, Audio tab

Pin	Tap In	Tap In Type	Tap In Unmute	Tap Out	Tap Out Type	Tap Out Unmute
Rx	None	A-Bypass In	On PTT	R7	D-Split	Busy Detect[1]
EPTT1	T5	A-Bypass In	On PTT	None	C-Bypass 0	On PTT

1. This can be set to **Busy Detect + Sub** if the mute is to open only when valid subaudible signalling is present with the transmission.

29.2.1 Repeater Transmit Tail Settings

TM8100 Radios

If the transmitter requires a "tail", then this can be set in the External PTT (1) tab of the PTT form. During the PTT deactivation delay period, any signalling, such as CTCSS or DCS, is still present.

Table 29.4 Transmit tail settings in the PTT form, External PTT (1) tab

Field		Setting
Advanced EPTT1	PTT Deactivation Delay	up to 1000ms

If a **further** transmitter tail is required, then this can be configured in the Subaudible Signalling tab of the Basic Settings form. During the lead-out delay period, no signalling, such as CTCSS or DCS, is present.

Table 29.5 Additional Transmit tail in the Basic Settings form, Subaudible Signalling tab

Field		Setting
CTCSS Settings	Lead-Out Delay	any duration, up to 1000ms
DCS Settings	Lead-Out Delay	any duration, up to 1000ms

TM8200 Radios

If the transmitter requires a "tail", then this can be configured in the Subaudible Signalling tab of the Basic Settings form. During the lead-out delay period, no signalling, such as CTCSS or DCS, is present.

Table 29.6 Transmit tail in the Basic Settings form, Subaudible Signalling tab

Field		Setting
CTCSS Settings	Lead-Out Delay	any duration, up to 1000ms
DCS Settings	Lead-Out Delay	any duration, up to 1000ms

© Tait Electronics Limited November 2007

29.3 Operational Testing

1. On the receiving radio, inject an on-channel RF signal at a level of -70 dBm, modulated to ±3 kHz deviation (wide bandwidth channel) or ±1.5 kHz (narrow bandwidth channel), at 1 kHz AF.

2. On the transmitting radio, the resulting deviation should be:
   - ±3 kHz (with a tolerance of ±200 Hz) on a 25 kHz wide bandwidth channel.
   - ±1.5 kHz (with a tolerance of ±200 Hz) on a 12.5 kHz narrow bandwidth channel.

29.4 Interface Specification

The following table and diagram summarizes the signals used for the crossband linking cable on the radios' auxiliary connectors and shows the interface between the cable and the radios.

Figure 29.1 TMAA04-04 crossband linking cable

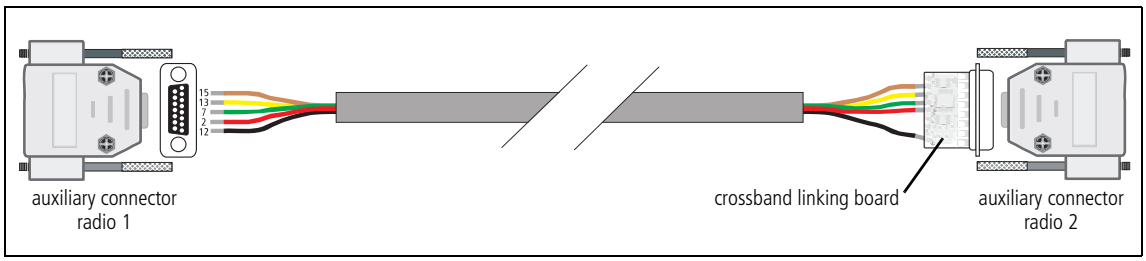

Table 29.7 Auxiliary connectors—pins and signals

	Pin	Signal name	Description
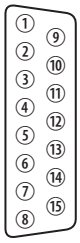 rear view	2	AUX_GPIO5	busy (output)
	7	AUD_TAP_IN	audio tap input
	12	AUX_GPI1	PTT (input)
	13	AUD_TAP_OUT	audio tap output
	15	AGND	analogue ground

© Tait Electronics Limited November 2007

29.5 PCB Information

29.5.1 TMAA04-04 Parts List (PCB IPN 220-02127-03)

Ref.	IPN	Description
C2	018-27470-00	CAP CER 0603 4U7 6V3 10% X5R
C10	018-27470-00	CAP CER 0603 4U7 6V3 10% X5R
J1	240-00031-00	PLG 15wy drng UL-CSA pnl mtg
R1	038-14120-10	RES 0603 1k2 1% 1/10W
R2	038-14120-10	RES 0603 1k2 1% 1/10W
R3	038-14120-10	RES 0603 1k2 1% 1/10W
R6	038-14120-10	RES 0603 1k2 1% 1/10W
SA	938-10001-01	SMT Alloy Lead Free (sac)

Ref.	IPN	Description
	220-02127-03	PCB TMA cross band link & RS232
	219-03005-00	CBL assy XB TMA
	330-02127-02	STEN BTM Cross Band LNK & RS232
	402-00030-xx	TMAA04-04 Crossbnd Lnking Cble Inst

29.5.2 Crossband Linking Board Layouts

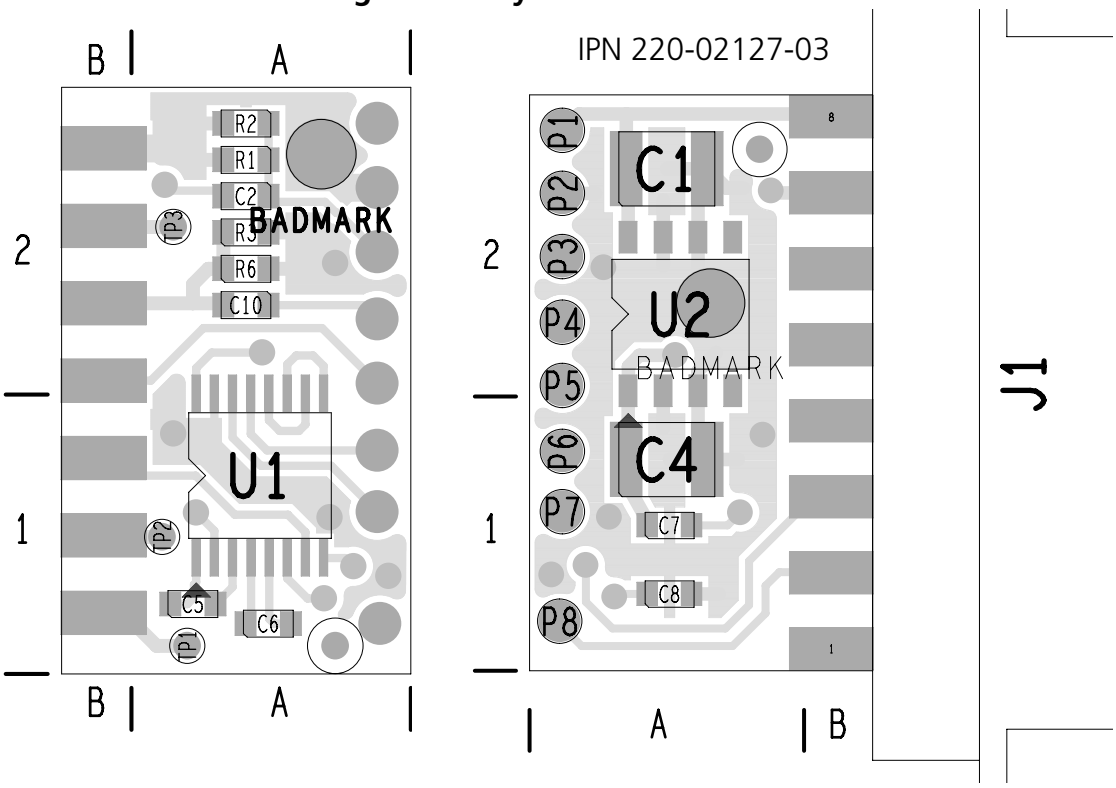

© Tait Electronics Limited November 2007

29.5.3 Crossband Linking Board Circuit Diagram

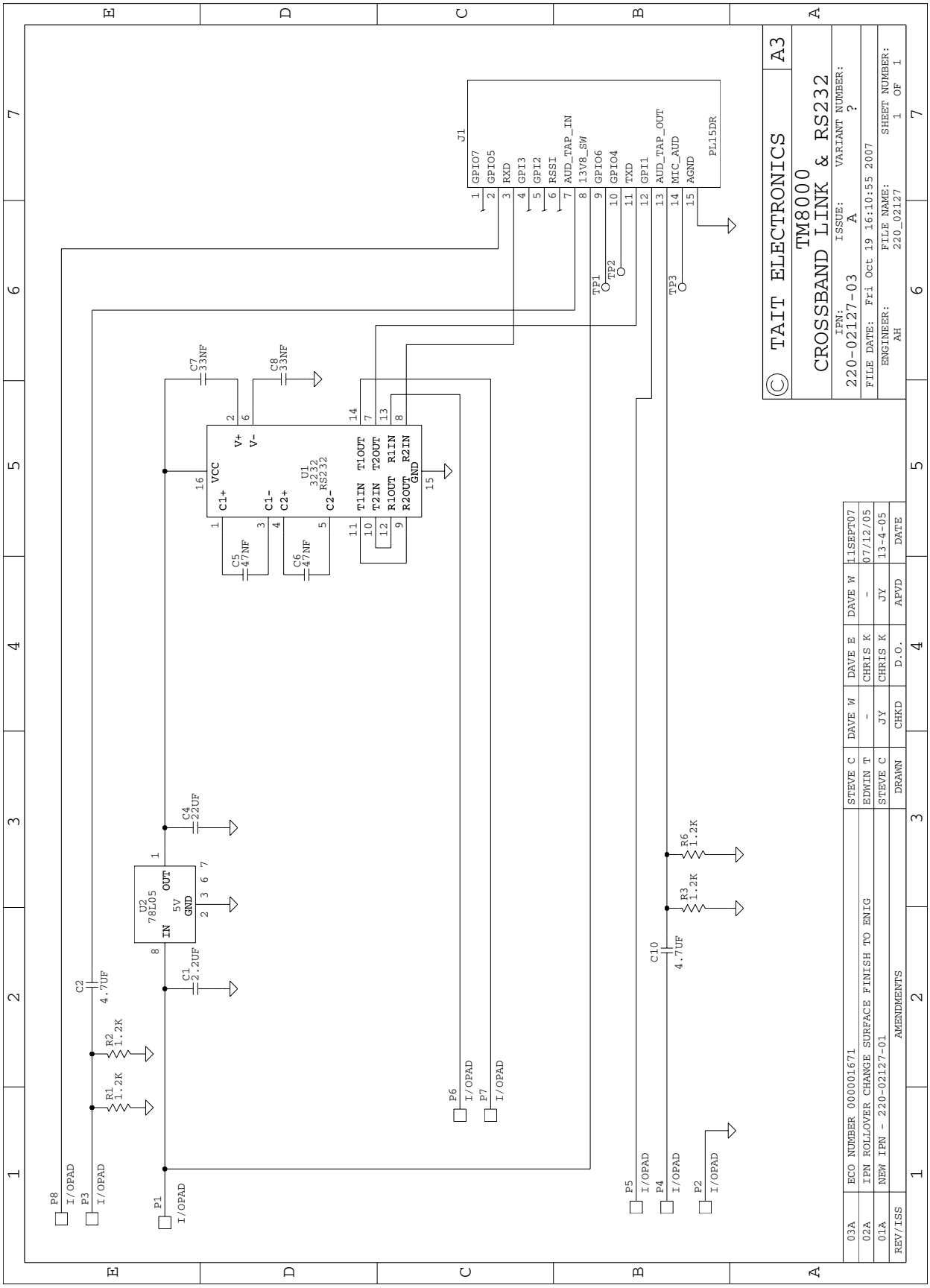

© Tait Electronics Limited November 2007

30 TMAA04-05 Ignition Sense Kit

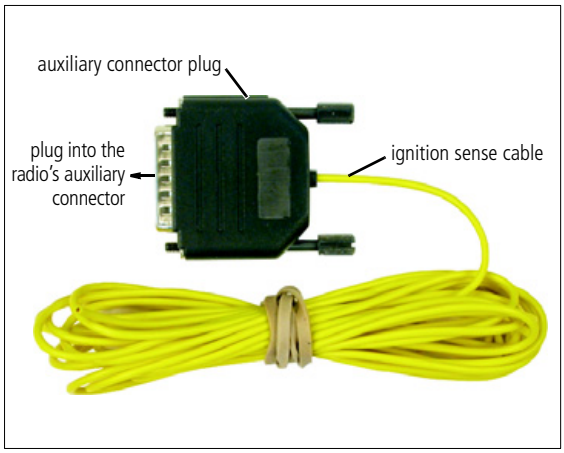

The TMAA04-05 ignition sense kit provides a mating plug for the radio's auxiliary connector. The four metre length of cable from pin 4 (AUX_GPI3) of the plug connects to the vehicle's ignition signal.

Once the kit is installed, the ignition signal is used to power up and power down the radio, so that when the vehicle ignition is turned off, the radio turns off. When the vehicle ignition is turned on, the radio is programmed to either turn on, or to return to the state that it was in when the vehicle ignition was turned off.

Important The radio does not meet the IP54 protection standard once the bung for the auxiliary connector is removed. Therefore, once the TMAA04-05 ignition sense kit is installed, mount the radio in areas where it is not exposed to water, dust or other environmental hazards.

30.1 Hardware Configuration for Ignition Sense

The radio hardware link LK2 (on the top-side of the main PCB) must be fitted for ignition sense operation. The following table and diagram describe the configuration options.

Note LK2 is fitted by default.

Table 30.1 Configuration of hardware links for ignition sense

Link required	Voltages required for TMAA04-05
LK2 in (factory default)	Ignition signal ≤ 0.9V (or floating) = off Ignition signal ≥ 5V = on Ignition-sense tolerant to 34V maximum

30.2 Installation

1. Connect the auxiliary connector plug to the radio's auxiliary connector.

2. Connect the ignition sense cable to the 13.8V signal controlled by the vehicle's ignition key.

© Tait Electronics Limited November 2007

30.3 Radio Programming

Startup/Shutdown form

In the **Power On Mode** field, set how the radio responds when the radio receives a signal to power on from the vehicle's ignition signal.

- Select either 'Power On' or 'Previous State'.

Programmable I/O form (Digital tab)

In the Digital tab, set the following fields:

- Set **AUX GPI3 line** to 'Power Sense (Ignition)'.
- Set **Active** to 'High'.

Refer to the online help of the programming application for more information.

© Tait Electronics Limited November 2007

31 TMAA04-06 Linking and Interface Cable

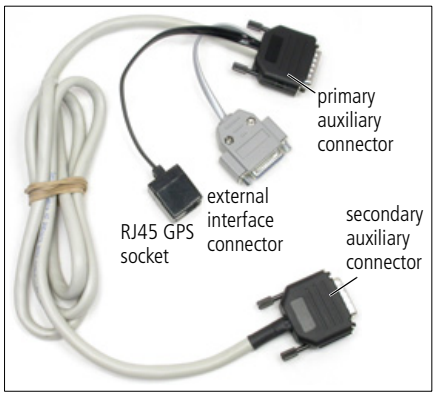

The TMAA04-06 cross-band linking, GPS, and external interface cable is used to extend the features available with TM8260 dual radio systems.

Using the cables provided in the TMAA04-06 kit, the radios can used for the following applications:

- cross-band repeater
- connection to a GPS device
- connection to a vehicle's ignition signal
- connection to an external alert device.

Note The cable does not currently support any programmable I/O actions, or connection to external devices or signals other than those described in this section.

Important The radio does not meet the IP54 protection standard once the auxiliary connector rubber bung has been removed and a crossband linking cable has been installed. Care must be taken when the radio is being operated in an environment where there is water, dust or other environmental hazards.

31.1 Cross-band Repeater Operation

The external interface cable in the TMAA04-06 kit is used to connect the auxiliary ports of two radios, allowing the radio system to be used as a cross-band repeater. Cross-band repeater mode enables a TM8260 dual radio system be used as a temporary repeater. Any activity received on one radio will be automatically transmitted on the other radio, and vice versa.

31.1.1 Installation

1. Remove the rubber bung that covers the auxiliary connector on each of the radios.
2. Plug an auxiliary connector into the auxiliary port of a radio body.
3. Plug the second auxiliary connector into the auxiliary port of the other radio body.

Note The cable can be plugged in either way—its orientation has no impact on radio performance. However, to reduce the cabling required, orient the cable so the external interface connector and GPS socket are closest to the device or devices to connect to.

4. Tightly fasten the jackscrew-type locks.

© Tait Electronics Limited November 2007

31.1.2 Radio Programming

Programmable I/O and Audio Settings

At a minimum, settings in Table 31.1, Table 31.2, and Table 31.3 must be programmed for both radios.

Table 31.1 Cross-band settings in the Programmable I/O form, Digital tab

Pin	Mode	Direction	Label	Action	Active	Debounce
AUX_GPI1	Conventional	Input	XBAND_TX	Crossband Tx Input	Low	10
AUX_GPIO5	Conventional	Output	BUSY	Busy Status[1]	Low	None
				Signalling Audio Mute Status[2]		

Table 31.2 Cross-band settings in the Programmable I/O form, Audio tab

Pin	Tap In	Tap In Type	Tap In Unmute	Tap Out	Tap Out Type	Tap Out Unmute
Rx	None	A-Bypass In	On PTT	R7	D-Split	Busy Detect[1]
						Busy Detect + Subaud[2]
EPTT1	T5	A-Bypass In	On PTT	None	C-Bypass 0	On PTT

1. Select Busy Status and Busy Detect to re-transmit any signal.
2. Select Signalling Audio Mute Status and Busy Detect + Subaud to transmit valid signalling only. This is recommended if the repeater is to operate on a scan group where member channels require valid subaudible signalling. Otherwise the radio may re-transmit short bursts of activity when a channel is busy but not captured due to invalid activity.

Table 31.3 Cross-band settings in the PTT form, External PTT (1) tab

Field		Setting
Advanced EPTT1	PTT Transmission Type	Voice
	Audio Source	Audio Tap In

Receive and Transmit Settings

The cross-band repeater receives signals based on the radio's squelch (carrier) mute, and re-transmits signals based on external PTT 1. If programmed to only re-transmit valid signals, the radio's signalling mutes are also taken into account, which are affected by the radio's monitor function (such as the hookswitch monitor when the microphone is off the hook). If monitor settings are programmed, the radio user must not enable monitor (such as having the microphone off the hook) while entering, or during, cross-band repeater mode.

The transmit timer, if enabled, limits the maximum duration of cross-band repeater transmissions. If a transmit lockout period is programmed then further repeater transmissions will also be inhibited until the lockout timer expires. However, if a valid received signal is present when the lockout timer expires then the radio does not automatically resume transmission.The received signal must first drop and return before re-transmission resumes.

Priority scanning also affects the transmit timer during cross-band repeater transmissions. If a non-priority channel in the group is captured, the radio will re-transmit that activity and the transmit timer will begin counting down. However, each time the radio samples the priority channel or

© Tait Electronics Limited November 2007

channels there is a brief break in reception, which will cause the transmit timer to restart.

Squelch override is not compatible with cross-band repeater operation. Avoid programming this feature to a function key, and consider removing the menu option.

Transmit Inhibit

If both radios are receiving activity when cross-band repeater mode is activated, the radio system can rapidly cycle between transmit and receive. Set Tx Inhibit to **Busy** to prevent this from happening by not allowing the radio system to transmit when there is another busy signal. An alternative is to set different debounce times for each radio (such as 10 and 100 ms), which will separate each radio's entry into cross-band repeater mode.

If the cross-band repeater is programmed to only re-transmit valid signals, and one radio is receiving an invalid signal (such as invalid CTCSS), the mute will stay closed and no re-transmission will occur. However, if the other radio then receives a valid signal, the radio will attempt to re-broadcast this over the other signal. Set Tx Inhibit to **Busy** or **Mute** to prevent this re-transmission occurring.

System Timing

For the cross-band repeater to operate correctly with other base stations or repeaters, system timing must be taken into account. If using subaudible signalling and the transmitter requires a "tail", then this can be configured according to Table 31.4. During the lead-out delay period, no signalling, such as CTCSS or DCS, is present.

Table 31.4 Transmit tail in the Basic Settings form, Subaudible Signalling tab

Field		Setting
CTCSS Settings	Lead-Out Delay	any duration, up to 1000 ms
DCS Settings	Lead-Out Delay	any duration, up to 1000 ms

31.1.3 Operational Testing

1. Enable cross-band repeater mode.
2. On the receiving radio, inject an on-channel RF signal at a level of -70 dBm, modulated to ±3 kHz deviation (wide bandwidth channel) or ±1.5 kHz (narrow bandwidth channel), at 1 kHz AF.
3. On the transmitting radio, the resulting deviation should be:
   - ±3 kHz (with a tolerance of ±200 Hz) on a 25 kHz wide bandwidth channel.
   - ±1.5 kHz (with a tolerance of ±200 Hz) on a 12.5 kHz narrow bandwidth channel.

© Tait Electronics Limited November 2007

31.2 Connecting to a GPS Device

The cable provides an RJ-45 socket, which is used to connect a TM8260 dual radio system to a GPS device such as a Garmin-16HVS antenna/receiver (product code TMAA05-01). GPS data is sent from the antenna to both radios.

31.2.1 Installation

Plug the GPS receiver/antenna directly into the RJ-45 socket. The socket is the correct type for the antenna, therefore the adaptor that is supplied with the GPS antenna is not required.

For information on antenna mounting, refer to the instructions provided with your GPS device.

31.2.2 Radio Programming

Program one or both radios with GPS settings as required. For detailed configuration and programming information contact your local Tait dealer.

31.3 Connecting to the Ignition Signal

The cable's external interface connector can be used to connect a TM8260 dual radio system to the vehicle's ignition signal. This will turn the radio system off when the ignition key is off to avoid draining the battery, and will turn the radio system on when the ignition key is on.

Note A TMAA04-05 ignition sense kit is available. The kit comprises a mating plug for the radio's auxiliary connector and a 13 foot (four metre) length of cable to connect to the vehicle's ignition signal.

31.3.1 Installation

Connect pin 4 of the external interface connector (AUX-GPI3) to the 13.8V signal controlled by the vehicle's ignition key.

Note Make sure the ignition switch and the radio link LK2 are properly configured to reduce the radio's power consumption. Refer to "TMAA04-05 Ignition Sense Kit" on page 581 for more information.

31.3.2 Radio Programming

Program both radios as shown in Table 31.5.

Table 31.5 Ignition sense settings in the Programmable I/O form, Digital tab

Pin	Mode	Direction	Label	Action	Active	Debounce
AUX_GPI3	All	Input	IGN_SENS	Power Sense (Ignition)	High	10

© Tait Electronics Limited November 2007

31.4 Connecting to an External Alert Device

The cable's external interface connector can be used to connect a TM8260 dual radio system to an external alert device in the vehicle. This enables both radios to drive the same external alert device.

31.4.1 Installation

The external alert lines used to connect to an external device are open collector outputs. Connect pin 9 (radio closest to connector) and pin 10 (radio furthest from connector) of the external interface connector to an input on the interface to the external alert device. Connect the pins together to drive the same external alert device. Connect the pins separately to drive separate external alert devices.

Important The high current sink capability of the radio's auxiliary lines cannot be accessed with this cable. That means you cannot connect directly to an external alert device—an interface to the external alert (such as a controller box) must be used.

Important The internal pullups normally available from the auxiliary lines are not available via this cable. If the external alert requires a logic-type signal on the output lines, the lines must be pulled up to a suitable voltage level by an external resistor.

31.4.2 Radio Programming

Program both radios as shown in Table 31.6.

Table 31.6 External alert settings in the Programmable I/O form, Digital tab

Pin	Mode	Direction	Label	Action	Active	Debounce
AUX_GPIO6	Conventional	Output	EXT_ALRT	External Alert 1	Low	None

© Tait Electronics Limited November 2007

31.5 Interface Specification

The following table and diagram summarizes the signals used for all the connectors on the cable, and shows the interfaces between the cable and the radios.

Table 31.7 Auxiliary connectors—pins and signals

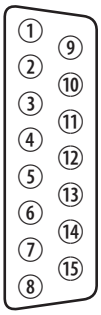

rear view

Pin	Signal name	Description
2	AUX_GPIO5	busy (output)
3	RXD	receive data
4	AUX_GPI3	ignition sense
7	AUD_TAP_IN	audio tap input
8	+13V8	power supply to GPS device
9	AUX_GPIO6	external alert
12	AUX_GPI1	PTT (input)
13	AUD_TAP_OUT	audio tap output
15	AGND	ground

Table 31.8 GPS socket—pins and signals

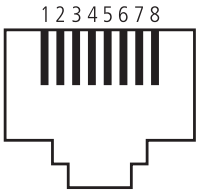

front view

Pin	Signal name	Description
1	+13V8	power supply from radio
2	GND	ground
3	GND	ground
5	GPS_TXD	transmit data

Table 31.9 External interface connector—pins and signals

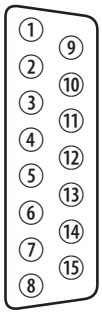

rear view

Pin	Signal name	Description
4	AUX_GPI3	ignition sense
9	AUX_GPIO6	external alert (radio closest to connector)
10	AUX_GPIO6	external alert (radio furthest from connector)
15	GND	ground

© Tait Electronics Limited November 2007

31.6 PCB Information

31.6.1 TMAA04-06 Parts List (PCB IPN 220-01755-01)

Ref.	IPN	Description
	219-03081-00	CBL assy TMA X-Band GPS Ign
	369-00010-27	CBL tie nyl 140x3.2mm
Primary auxiliary connector		
C1	018-16100-00	CAP 100n 16V ±10% 0603 X7R
C2	018-14101-00	CAP 1n 50V NPO ±5% 0603
C3	018-15100-00	CAP 10n 50V ±10% 0603 X7R
D1	001-10100-00	DIODE SMF10A TVS 10V SOD123FL
D2	001-10070-07	DIODE BAS70-07W dual SOT343
D3	001-10280-00	DIODE SMF28A TVS 28V SOD123FL
D4	001-10011-74	DIODE MRA4004T3 1A/400V
F1	265-10026-00	FUSE 0805 800mA 50V
F2[1]	265-10026-00	FUSE 0805 800mA 50V
Q1	000-10084-72	XSTR BC847BS NPN Dual SOT363
R1	038-13560-10	RES 0603 560R 1% 1/10W
R3	038-12820-00	RES 0603 82R 5% 1/10W
R4	038-15470-10	RES 0603 47k 1% 1/10W
R5	038-15330-10	RES 0603 33k 1% 1/10W
R6	038-14680-10	RES 0603 6k8 1% 1/10W
R7	038-13120-00	RES 0603 120R 5% 1/10W
R9	036-14680-10	RES 0805 6k8 1% 1/8W
R11	038-10000-00	RES 0603 0R 5% 1/10W
SA	938-10001-01	SMT Alloy Lead Free (sac)
	220-01755-01	PCB cross-bnd extnl-I/F cbl

Ref.	IPN	Description
Secondary auxiliary connector		
C1	018-16100-00	CAP 100n 16V ±10% 0603 X7R
C2	018-14101-00	CAP 1n 50V NPO ±5% 0603
C3	018-15100-00	CAP 10n 50V ±10% 0603 X7R
D1	001-10100-00	DIODE SMF10A TVS 10V SOD123FL
D3	001-10280-00	DIODE SMF28A TVS 28V SOD123FL
D4	001-10011-74	DIODE MRA4004T3 1A/400V
F1	036-10000-00	RES 0805 0R 1/8W
Q1	000-10084-72	XSTR BC847BS NPN Dual SOT363
R1	038-13560-10	RES 0603 560R 1% 1/10W
R2	038-14120-10	RES 0603 1k2 1% 1/10W
R3	038-12820-00	RES 0603 82R 5% 1/10W
R4	038-15470-10	RES 0603 47k 1% 1/10W
R5	038-15330-10	RES 0603 33k 1% 1/10W
R6	038-14680-10	RES 0603 6k8 1% 1/10W
R7	038-13120-00	RES 0603 120R 5% 1/10W
R8	036-14560-10	RES 0805 5k6 1% 1/8W
R9	036-14560-10	RES 0805 5k6 1% 1/8W
R10	038-10000-00	RES 0603 0R 5% 1/10W
R11	038-10000-00	RES 0603 0R 5% 1/10W
SA	938-10001-01	SMT Alloy Lead Free (sac)
	220-01755-01	PCB cross-bnd extnl-I/F cbl

1. F2 is a spare fuse.

31.6.2 Linking and Interface Cable Board Layouts

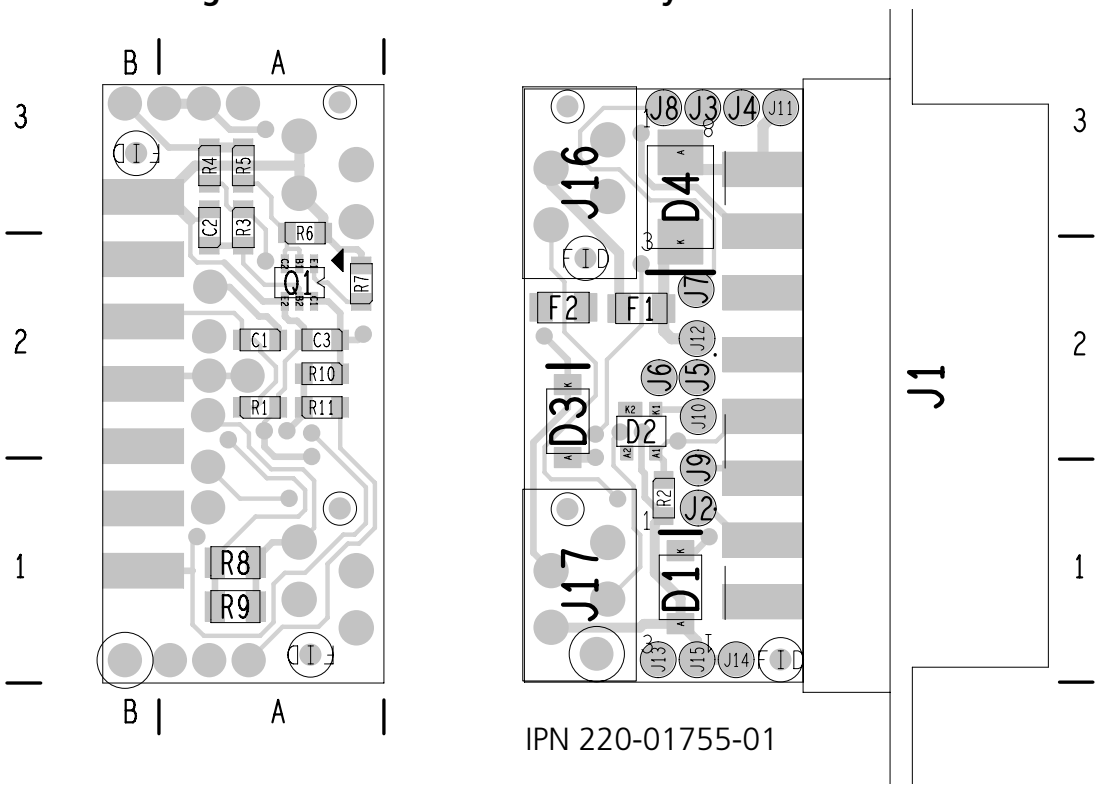

© Tait Electronics Limited November 2007

31.6.3 Linking and Interface Cable Circuit Diagram

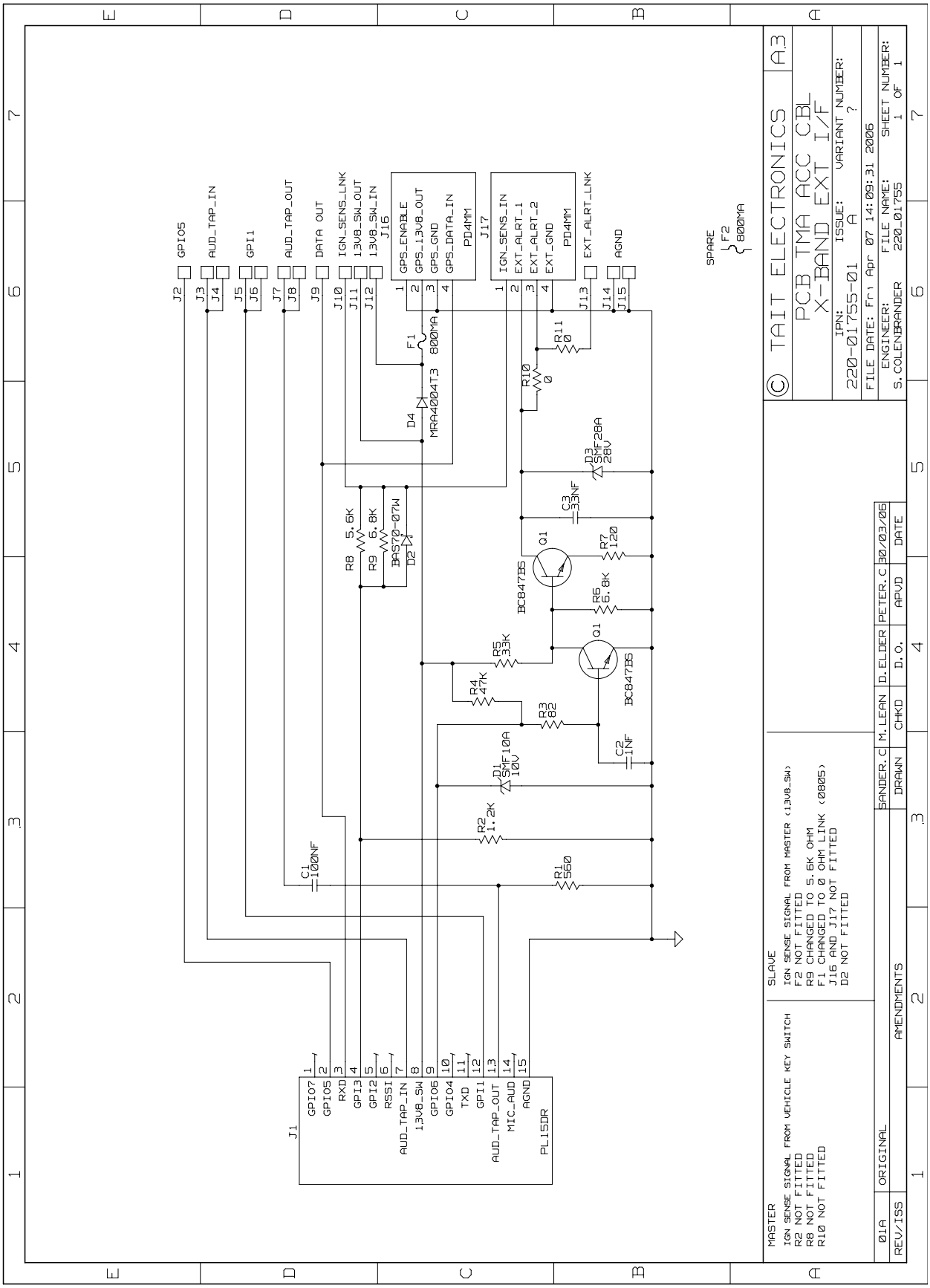

© Tait Electronics Limited November 2007

32 TMAA10-01 Desktop Microphone

The TMAA10-01 desktop microphone is an omnidirectional dynamic microphone which can be used in dispatch situations, where the microphone is positioned on a flat surface. The desktop microphone plugs into the microphone socket on the radio control head.

The desktop microphone has an internal pre-amplifier and an adjustable sensitivity control on the underside of the desktop microphone base.

32.1 Operation

Hold down the monitor key and check whether the channel is clear.

If the channel is clear, press the PTT key to transmit. Speak clearly into the microphone and release the PTT key when you have finished talking.

Note The monitor key can be locked in the 'on' position. To do this, hold the monitor key down and slide the monitor key towards you. The monitor key should now be locked on.

32.2 Installation

Important The desktop microphone grommet must be installed whenever the desktop microphone is plugged into the microphone socket. When installed, the grommet has two functions:

- to prevent damage to the microphone socket when there is movement of the microphone cord, and
- to ensure that the control head is sealed against water, dust and other environmental hazards.

1. Plug the microphone cord into the microphone socket on the radio control head.
2. Slide the grommet along the cord and push two adjacent corners of the grommet into the microphone socket cavity.

© Tait Electronics Limited November 2007

3. Squeeze the grommet and push the remaining corners into position.

4. Check that the grommet is seated correctly in the cavity.

Figure 32.1 Correct desktop microphone grommet seating

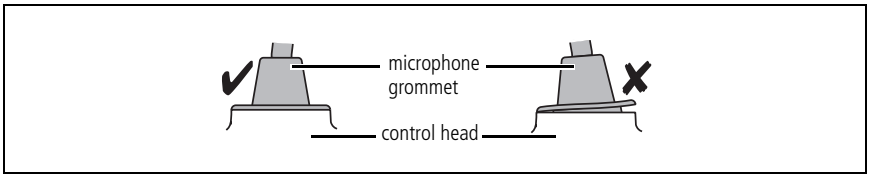

32.3 Adjustment

Adjust the output sensitivity of the desktop microphone using R5. R5 is accessible from the underside of the desktop microphone, as shown.

The microphone sensitivity is set to maximum by rotating R5 counterclockwise.

32.4 Interface Specification

The following table and diagram summarizes the signals used for the desktop microphone on the radio's microphone connector and shows the interface between the desktop microphone and the radio.

Table 32.1 Desktop microphone connector—pins and signals

	Pin	Signal	Colour	Description
	1	—	—	not connected
	2	—	—	not connected
	3	—	—	not connected
	4	MIC_PTT	yellow	PTT
	5	MIC_AUD	red	audio from the microphone
	6	AGND	bare	analogue ground
	7	—	—	not connected
	8	—	—	not connected

© Tait Electronics Limited November 2007

Figure 32.2 Desktop microphone to radio interface

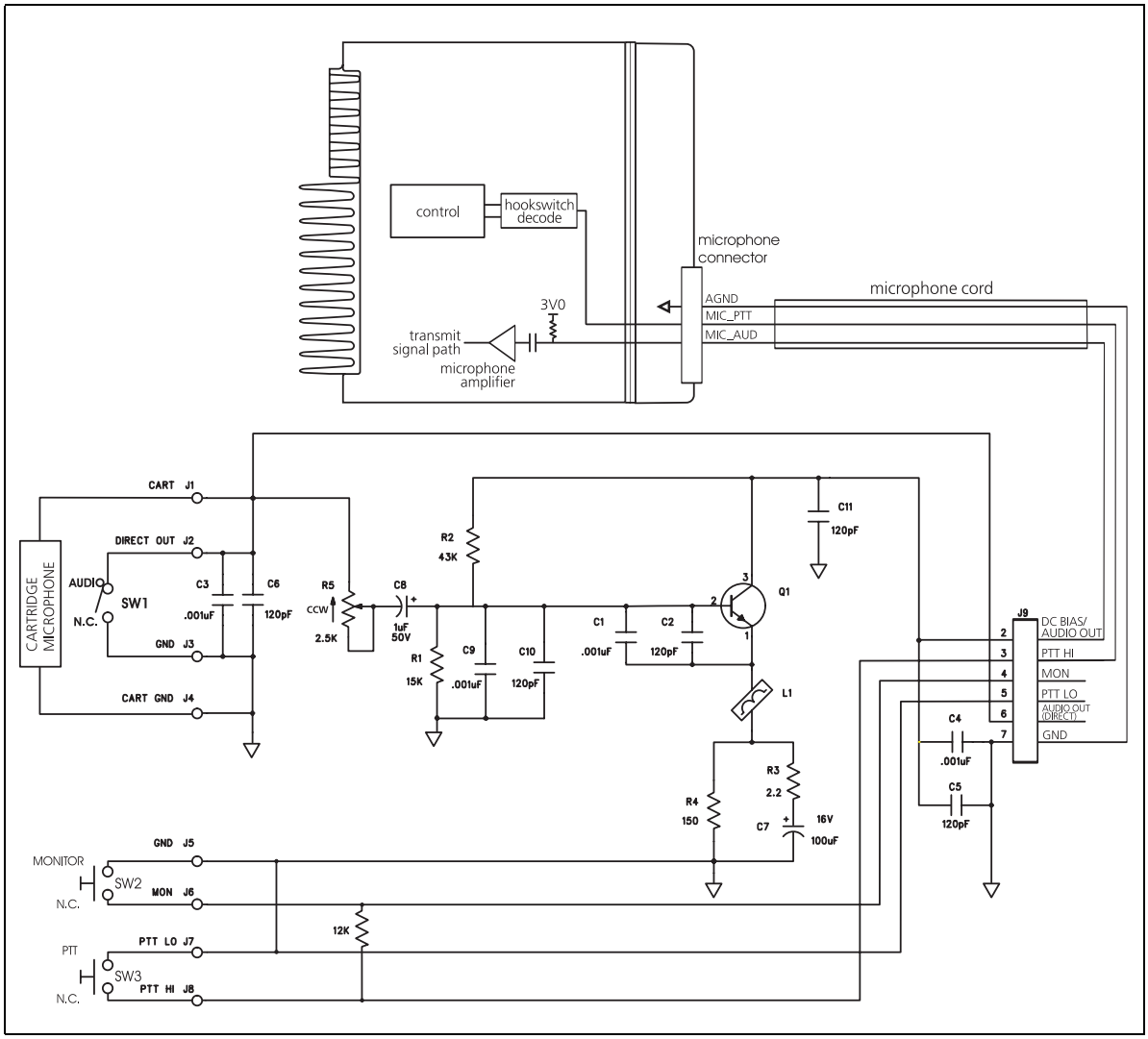

32.5 Circuit Description

The desktop microphone uses a dynamic microphone capsule and contains a pre-amplifier (Q1) to boost the microphone level to that required by the radio. Power for the pre-amplifier is provided by the electret microphone bias circuit within the radio. R5 is used to adjust the gain.

PTT and hookswitch signals are combined onto one line and fed to the control head PTT input of the radio.

© Tait Electronics Limited November 2007

© Tait Electronics Limited November 2007

33 TMAA10-02 Handset

The TMAA10-02 handset provides the user with privacy and also improves the audio quality in noisy environments. The handset uses a dynamic microphone capsule, therefore the radio control head must support dynamic microphone operation. For example, a TMAA02-06 (support kit for dynamic microphones) must be fitted to control head TMAC20-0T.

When your radio receives a call and the handset is mounted in its locking cradle, the radio unmutes and you can hear the call from your radio's internal speaker and from any connected remote speaker.

If you remove the handset from its cradle when you receive a call, the radio unmutes and you can hear the call from your radio's internal speaker, from any connected remote speaker and from the handset earpiece.

Using private handset mode, the radios internal and external speakers are muted and the call can only be heard from the handset earpiece.

33.1 Installation

33.1.1 Handset Wiring

The circled numbers in the following instructions refer to items in the diagram in Table 33.1.

1. Drill a hole in the chosen mounting surface for the radio to handset cord and pass the cord through the hole.
2. Prepare the radio to handset cord, as follows.
   - Cut the radio to handset cord to the required length.
   - Strip away about 60mm (2 inches) of the cable outer sheath on the end without a connector.
   - Cut off the exposed orange, red, black and bare wires.
   - Strip about 6mm (0.2 inches) of the coating off each of the five remaining wires.
3. Secure the radio to handset cord in the handset PCB P-clip ①, as shown in the diagram.
4. Connect the five wires to the handset PCB connector ②.

© Tait Electronics Limited November 2007

Table 33.1 Handset PCB connector wiring

	Handset PCB Connector	Colour	Reference
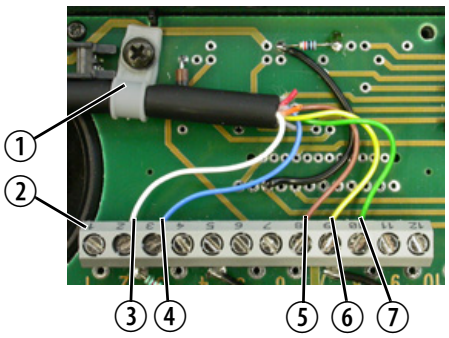	2	white or violet	③
	3	blue	④
	8	brown	⑤
	9	yellow	⑥
	10	green	⑦

33.1.2 Handset Installation

1. Press the pushbutton and remove the handset from the locking cradle.
2. Disassemble the locking cradle by removing the four locking cradle screws.
3. Screw the handset mounting plate to the required mounting surface. Note that mounting screws are not provided in this kit.
4. Clamp the top part of the locking cradle onto the mounting plate, and secure it with the four locking cradle screws.

33.1.3 Connecting the Handset to the Radio

Important The handset microphone grommet must be installed whenever the handset to radio cord is plugged into the microphone socket. When installed, the grommet has two functions:

- to prevent damage to the microphone socket when there is movement of the microphone cord, and
- to ensure that the control head is sealed against water, dust and other environmental hazards.

1. Plug the radio to microphone cord into the microphone socket on the radio control head.
2. Slide the grommet along the cord and push two adjacent corners of the grommet into the microphone socket cavity.
3. Squeeze the grommet and push the remaining corners into position.
4. Check that the grommet is seated correctly in the cavity.

© Tait Electronics Limited November 2007

Figure 33.1 Correct handset microphone grommet seating

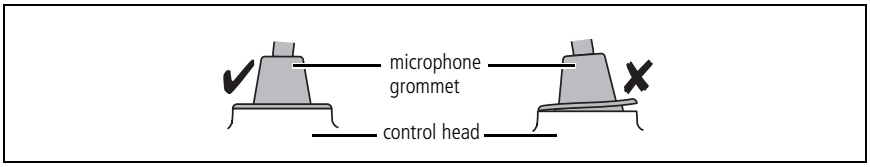

33.2 Radio Programming

Dynamic Microphone Support

Dynamic microphone support must be enabled in the UI Preferences form of the radio's programming application, so that audio is optomized for dynamic microphones. Refer to the online help of the programming application for more information.

Table 33.2 Handset settings in the UI Preferences form (TM8100 Programming Application)

Field	Setting	Selected/Cleared
Audio Setup	Enable Options Board Preamp	selected

Table 33.3 Handset settings in the UI Preferences form (TM8200, TM9000/TP9000 Programming Application)

Field	Setting	Selected/Cleared
Audio>Audio Setup	Dynamic Mic Support	selected

Private Handset Mode

If private handset mode is required, the radio needs to be programmed to mute the audio power amplifier when the handset is out of the cradle. The audio path is then only through the RX AUDIO line to the handset earpiece.

The following table shows the settings required in the Programmable I/O form of the radio's programming application. Refer to the online help of the programming application for more information.

Note If private handset mode is programmed, then no audio will be heard from the speakers if the handset is unplugged.

Table 33.4 Handset settings in the Programmable I/O form, Digital tab

Pin	Direction	Label	Action	Active	Debounce	Signal State	Mirrored To
CH_GPIO1	Input	None	Force Audio PA Off	High	25	None	None

© Tait Electronics Limited November 2007

33.3 Interface Specification

The following table and diagram summarizes the signals used for the handset on the radio's microphone connector and shows the interface between the handset and the radio.

Table 33.5 Handset microphone connector—pins and signals

	Pin	Signal	Handset PCB Connector	Colour	Description
	1	RX_AUD	8	brown	receive audio to handset
	2	—	—	—	not connected
	3	—	—	—	not connected
	4	PTT	2	white	PTT and hookswitch
	5	MIC	9	yellow	audio from the handset to dynamic-mic support board
	6	GND	10	green	analogue ground
	7	—	—	—	not connected
	8	CH_GPIO1	3	blue	programmable line controlling private mode

Figure 33.2 Handset to radio interface

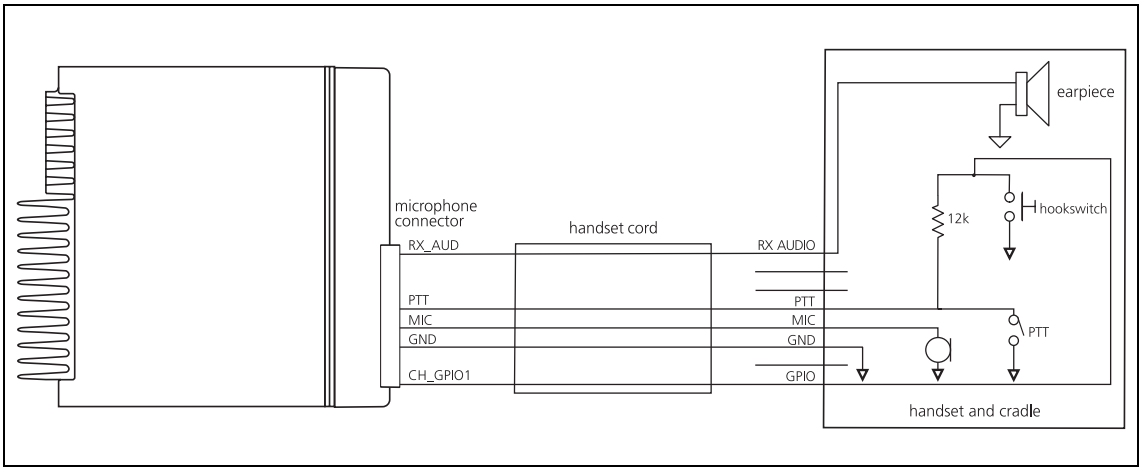

© Tait Electronics Limited November 2007

34 TMAA10-03 and TMAA10-06 High-Power Remote Speakers

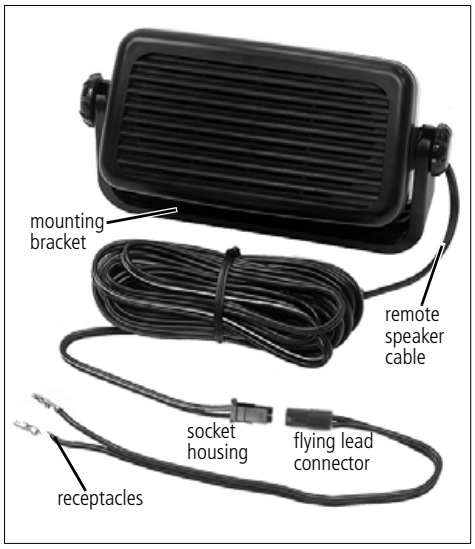

The TMAA10-03 remote speaker (for the 25 W radio) and the TMAA10-06 remote speaker (for the 40 W/50 W radio) are installed in parallel with the radio's existing internal speaker. The remote speaker can then be installed at some distance from the radio, or it can be used to increase the volume of the audio from the radio's existing internal speaker.

The remote speaker is supplied with a socket housing (already installed) and a flying lead connector. This connector enables the speaker to be easily removed and reconnected as required.

The flying lead connector is terminated with two receptacles. The receptacles supplied with the TMAA10-03 (for 25 W radios) are different to those supplied with the TMAA10-06 (40 W/50 W radios). Two spare receptacles are included with each kit, along with four mounting screws and washers.

34.1 Installation

Remote Speaker Mounting

1. Choose a mounting position for the remote speaker where it will not interfere with the operation of any of the vehicle controls.

2. Remove the remote speaker from the mounting bracket and use the screws and washers provided to fix the mounting bracket securely in the chosen location.

Important Check before drilling that the drill will not damage any components or wiring behind the mounting location.

- If mounting the bracket onto a metal surface, drill two 3.5 mm (0.14 inch) holes in the appropriate locations and secure the bracket with the supplied self tapping screws.
- If mounting the bracket to any other material, such as plastic, drill two 4.5 mm (0.18 inch) holes and attach the bracket with screws and captive nuts, or similar.

3. Attach the speaker to the mounting bracket using the thumbscrews.

Important Check that the speaker cable is protected from engine heat, sharp edges and from being pinched or crushed.

© Tait Electronics Limited November 2007

4. Run the free end of the speaker cable to the radio power cable and install the two receptacles in the power connector, as described in the "Power Connector Wiring" procedure.

Power Connector Wiring

Insert the flying lead receptacles into the power connector socket, as shown in the diagrams below.

Note The positive remote speaker wire has a white stripe.

1. TMAA10-03 remote speaker (25 W radios)

For the TMAA10-03 remote speaker (25 W radios), insert the flying lead receptacles:

- the positive wire and receptacle into the position nearest to the red wire, and
- the negative wire and receptacle into the position nearest to the black wire.

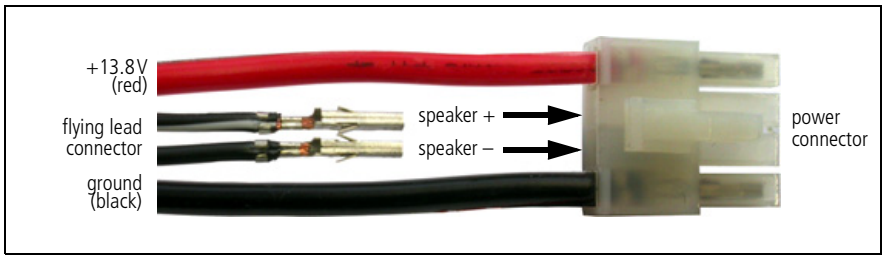

2. TMAA10-06 remote speaker (40 W / 50 W radios)

For the TMAA10-06 remote speaker (40 W/50 W radios), insert the flying lead receptacles:

- the positive wire and receptacle into position 3, and
- the negative wire and receptacle into position 2.

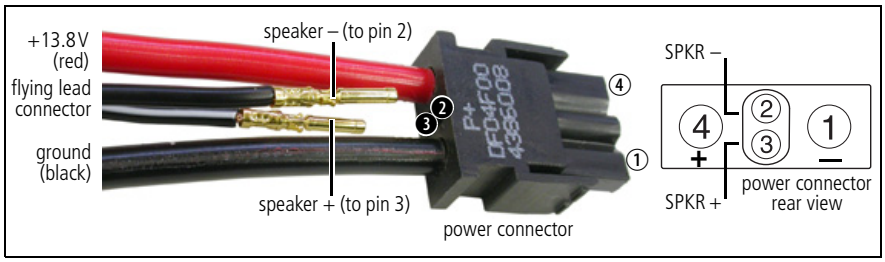

Connecting the Remote Speaker

To connect the remote speaker, plug the flying lead into the housing socket.

To disconnect the speaker, release the locking mechanism and unplug the flying lead.

© Tait Electronics Limited November 2007

35 TMAA10-04 Remote PTT Kit and TMAA10-05 Hands-Free Kit

The TMAA10-04 remote PTT kit and the TMAA10-05 hands-free kit plug into the radio's auxiliary connector. Both kits use the remote electret microphone to replace communication through the usual rugged microphone. The rugged microphone can still provide hookswitch operation, if this is required.

The TMAA10-04 kit uses a conveniently mounted remote PTT key for PTT operation. When the remote PTT is activated, the remote microphone is used for communication.

There are three mounting options for the remote microphone and an extension lead is provided for the remote PTT in the TMAA10-04 kit.

Important These kits do not meet the IP54 protection standard. Care must be taken when a radio with a TMAA10-04 or TMAA10-05 kit installed is being operated in an environment where there is water, dust or other environmental hazards.

35.1 VOX Operation (TMAA10-05 Hands-Free Kit)

Your radio may able to detect the sound of your voice, so that you can make calls without using the PTT key. Voice-operated transmit (VOX) is turned on and off either by using a function key programmed for VOX or by using the radio's Main menu.

Changing to VOX Using a Function Key

The function key programmed for VOX toggles VOX between on and off. When VOX is turned on, it remains on until the function key is pressed again.

While VOX is on, the VOX indication may be programmed to appear below the channel information on your display.

Changing to VOX by using the Main Menu

1. Select Menu > Radio Settings > Function Settings > VOX.

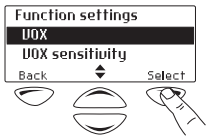

© Tait Electronics Limited November 2007

2. In the VOX menu, choose **On**.

3. Press **Select**.

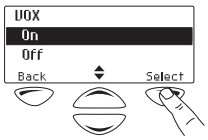

While VOX is on, the VOX indication may be programmed to appear below the channel information on your display.

Changing the Sensitivity of VOX

You may need to change the threshold at which the radio detects your voice and makes a call. To do this, you use the VOX Sensitivity menu.

1. Select Menu>Radio Settings>Function Settings>VOX Sensitivity.

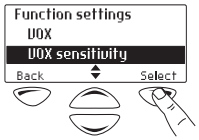

2. In the VOX Sensitivity menu, use the scroll keys ⌔ or ⌓ to adjust the VOX sensitivity to the desired level.

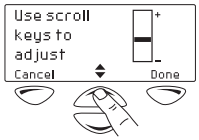

3. Press **Done** to save this setting.

35.2 Installation

Important Care should be taken to avoid routing any cables near vehicle pedal controls, steering column and other moving parts.

Installing the Remote Microphone

1. Choose one of the three mounting options provided for the remote microphone and determine its most appropriate location.

   The mounting position of the microphone should be no more than 50 cm (20 inches) from the user's mouth.

2. Route the remote microphone cable so as not to distract the driver.

3. Mount the remote microphone in the chosen location and check that the microphone and cable are clear of all the usual movements performed by the user.

Installing the Remote PTT (TMAA10-04)

Important The remote PTT must be operable from a normal driving position.

1. Secure the remote PTT in position using the velcro strap and plug the remote PTT cord into the remote PTT extension lead.

   A common position for the remote PTT is on the gear lever of the vehicle.

© Tait Electronics Limited November 2007

2. Check that the cord and lead do not interfere with the safe operation of the vehicle.

35.3 Radio Programming for the TMAA10-04 Remote PTT Kit

Remote PTT Settings in the PTT Form

The following table shows the settings required in the PTT form of the programming application. Some of these settings are default settings and may not need to be changed. Refer to the online help of the programming application for more information.

Note The handsfree remote PTT cannot transmit when the rugged microphone is on the microphone clip (microphone hookswitch is closed) if:

- hookswitch operation is programmed for the rugged microphone, and
- the **Inhibit PTT Transmission When Mic On Hook** field is selected in the PTT tab of the PTT form.

Table 35.1 Remote PTT settings in the PTT form, External PTT (1) tab

Field		Setting
Advanced EPTT1	PTT Transmission Type	Voice
	Audio Source	AUX MIC

Remote PTT Settings in the Programmable I/O Form

The following table shows the settings required in the Programmable I/O form of the programming application. Some of these settings are default settings and may not need to be changed. Refer to the online help of the programming application for more information.

Note The Programmable I/O form setting for AUX_GPIO4 must have the default programming settings and the AUX_GPIO4 pullup resistor on the radio main PCB must be set for the factory default of 3.3V (R769 fitted).

Table 35.2 Remote PTT settings in the Programmable I/O form, Digital tab

Pin	Direction	Label	Action	Active	Debounce	Signal State	Mirrored To
AUX_GPI1	Input	None	External PTT 1	Low	25	None	None
AUX_GPIO4	None	None	No Action	None	None	None	None

© Tait Electronics Limited November 2007

35.4 Radio Programming for the TMAA10-05 Hands-Free Kit

VOX Settings in the PTT Form

The following table shows the settings required in the PTT form of the programming application. For detailed instructions on how to configure a radio for VOX operation, refer to the section "Configuring VOX" in the online help of the programming application.

Table 35.3 VOX settings in the PTT form, External PTT (2) or VOX tab

Field		Setting
EPTT2 or VOX Inhibit	Inhibit PTT When Emergency Active	select[1]
	Inhibit PTT Transmission When Mic on Hook	clear[a]
	Indicate PTT Inhibit to User	clear[a]
Advanced EPTT2 or VOX	PTT Transmission Type	Voice
	Audio Source	AUX MIC
	PTT Priority	Highest[a]

1. These are recommended settings only.

VOX Settings in the Key Settings Form

In the Key Settings form of the programming application, one of the function keys on the control head can be programmed to activate VOX.

Table 35.4 VOX settings in the Key Settings form

Field		Setting
Function Key Actions	Key 1[1]	VOX Activation

1. Select the required function key.

35.5 Interface Specification

The following table and diagram summarizes the signals used for the remote PTT and hands-free kits on the radio's auxiliary connector and shows the interface between the kits and the radio.

Table 35.5 Auxiliary connector—pins and signals

	Pin	Signal name	Description
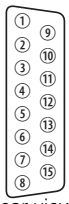 rear view	8	+13V8_SW	power to hands-free microphone pre-amplifier
	10	AUX_GPIO4	reference voltage to pre-amplifier regulator
	12	AUX_GPI1	PTT signal from hands-free kit
	14	AUX_MIC_AUD	microphone audio to the radio
	15	AGND	analogue ground

© Tait Electronics Limited November 2007

Figure 35.1 TMAA10-04/TMAA10-05 to radio interface

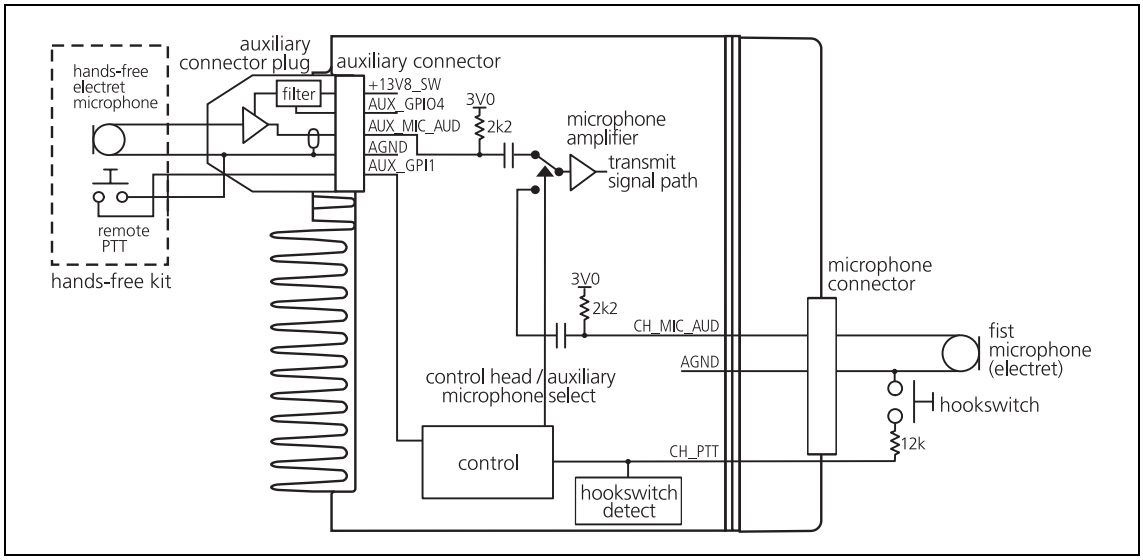

35.6 Circuit Description

The remote microphone signal is amplified by a pre-amplifier in the auxiliary connector plug. The power supply to this amplifier is provided by the +13.8V supply on the auxiliary connector. This supply is filtered and regulated down to approximately 3.3V. The reference voltage for the regulator is provided by AUX_GPIO4 line.

The remote microphone signal is fed via AUX_MIC_AUD and an input selector to the radio's internal microphone amplifier. The microphone input selected depends on the PTT source used to make the call. If the remote PTT is used, then AUX_MIC_AUD is selected. If the control head microphone PTT is used, then CH_MIC_AUD is selected. Test points for all other auxiliary connections are provided on the auxiliary connector plug PCB to facilitate the connection of other devices or signals e.g ignition switch signal.

© Tait Electronics Limited November 2007

35.7 PCB Information

35.7.1 TMAA10-04/TMAA10-05 Parts List (PCB IPN 220-01711-01)

Ref.	IPN	Description
C2	015-26330-08	Cap Cer 0805 330n 5% 10v X7r
C3	018-15100-00	Cap 0603 10n 50v X7r +-10%
C4	015-26330-08	Cap Cer 0805 330n 5% 10v X7r
C6	015-26100-08	Cap Cer 0805 100n 10% X7r 50v
C7	015-26100-08	Cap Cer 0805 100n 10% X7r 50v
Q1	000-10084-71	Xstr BC847BW NPN SOT323
Q2	000-10085-71	Xstr SMD BC857BW PNP SOT323
Q3	000-10084-71	Xstr BC847BW NPN SOT323
Q4	000-10084-71	Xstr BC847BW NPN SOT323
R1	038-14220-00	Res 0603 2k2 1/16w +-5%
R3	038-14390-10	Res 0603 3k9 1%
R4	038-15470-10	Res 0603 47k 1/16w+-1%
R6	038-15330-10	Res 0603 33k 1%
R13	038-15100-10	Res 0603 10k 1/16w +-1%
R16	038-15470-10	Res 0603 47k 1/16w+-1%
R17	038-15150-00	Res 0603 15k 1/16w +-5%
R18	038-15100-10	Res 0603 10k 1/16w +-1%
R19	038-15100-10	Res 0603 10k 1/16w +-1%
	219-00305-00	cable
	220-01711-01	Pcb HFree
	240-06010-18	Conn 15w Hood/Cvr Drng MDJ15
	252-00010-72	Mic Electret Unidir 2.5mm Plg
	402-00006-01	F/Inst TMAA10-04/TMAA10-05 Eng

TMAA10-04 Remote PTT only

	236-00001-00	Sw Ptt W/Cbl & Strap

Ref.	IPN	Description

© Tait Electronics Limited November 2007

35.7.2 Pre-Amplifier Board Layout

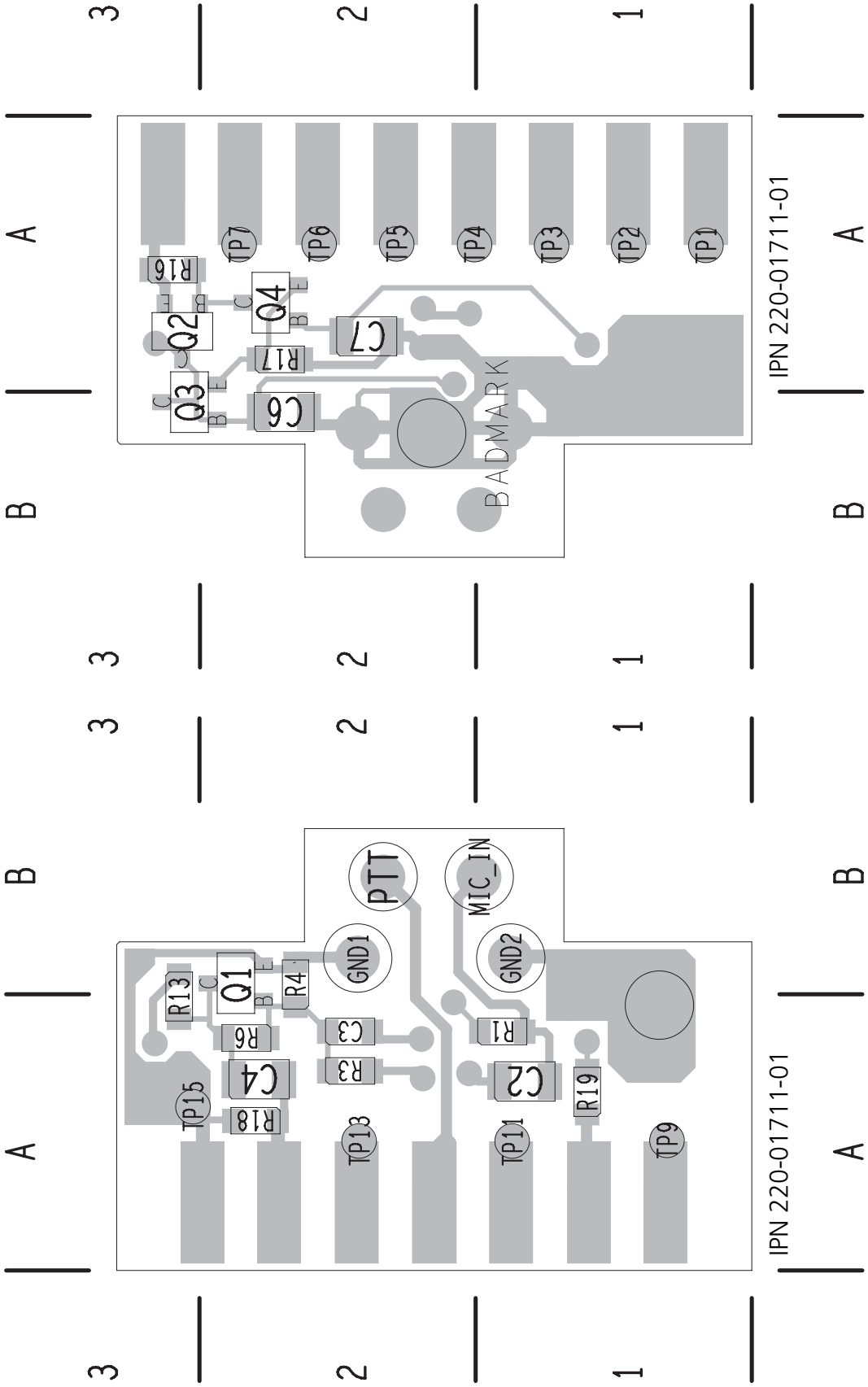

© Tait Electronics Limited November 2007

35.7.3 Pre-Amplifier Board Circuit Diagram

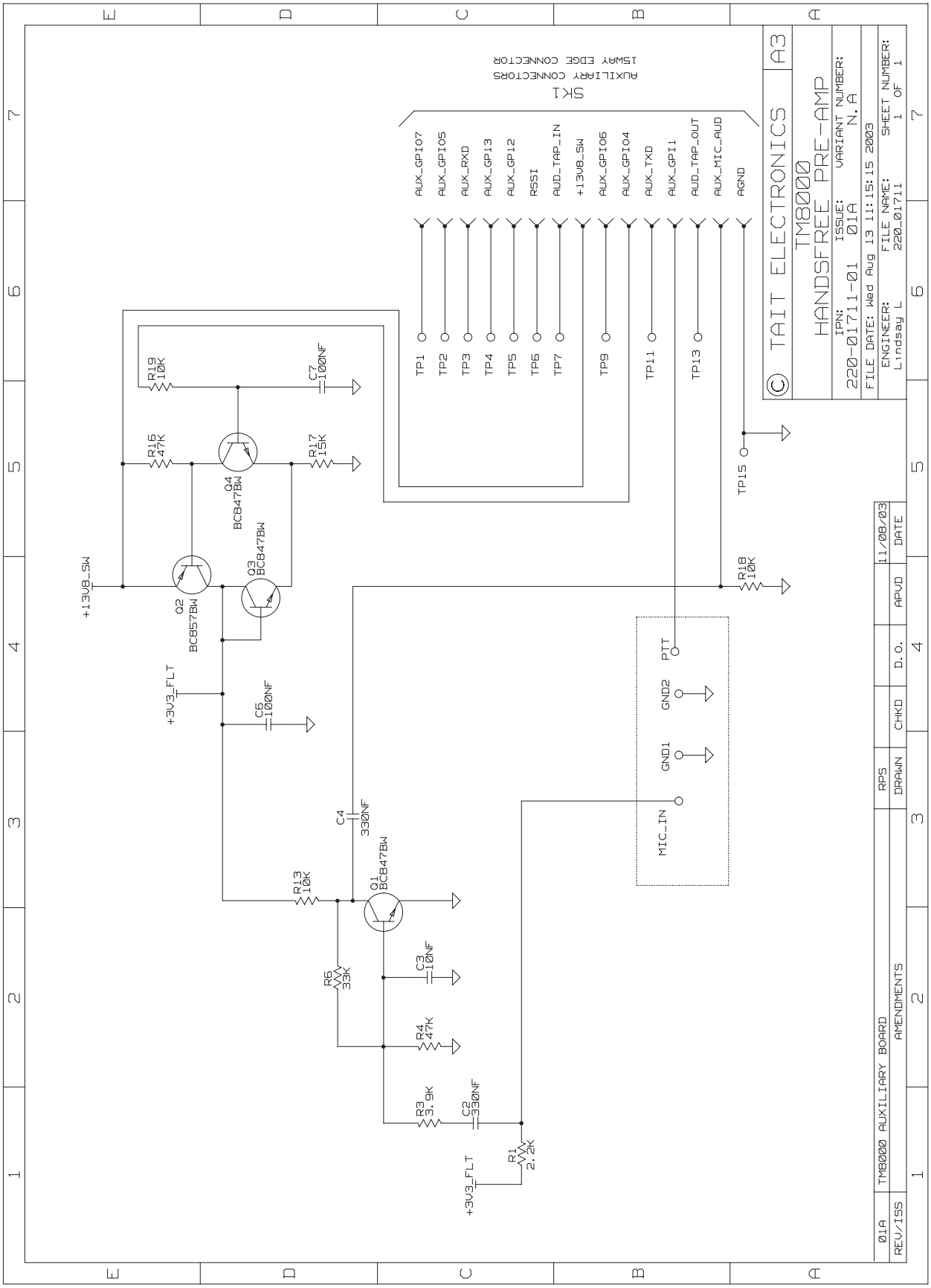

© Tait Electronics Limited November 2007

36 TMAA10-07 Desktop Microphone

The TMAA10-01 desktop microphone is an omnidirectional dynamic microphone which can be used in dispatch situations, where the microphone is positioned on a flat surface. The desktop microphone plugs into the microphone socket on the radio control head.

The desktop microphone has an internal pre-amplifier and an adjustable output control on the underside of the desktop microphone base.

36.1 Operation

Hold down the MONITOR key and check whether the channel is clear.

If the channel is clear, press the TRANSMIT key (PTT) to transmit. Speak clearly into the microphone and release the TRANSMIT key when you have finished talking.

Note The MONITOR key can be locked in the 'on' position. To do this, hold the MONITOR key down and slide the LOCK key towards you. The MONITOR key should now be locked on.

36.2 Installation

Important The desktop microphone grommet must be installed whenever the desktop microphone is plugged into the microphone socket. When installed, the grommet has two functions:

- to prevent damage to the microphone socket when there is movement of the microphone cord, and
- to ensure that the control head is sealed against water, dust and other environmental hazards.

1. Plug the microphone cord into the microphone socket on the radio control head.

© Tait Electronics Limited November 2007

2. Slide the grommet along the cord and push two adjacent corners of the grommet into the microphone socket cavity.
3. Squeeze the grommet and push the remaining corners into position.
4. Check that the grommet is seated correctly in the cavity.

Figure 36.1 Correct desktop microphone grommet seating

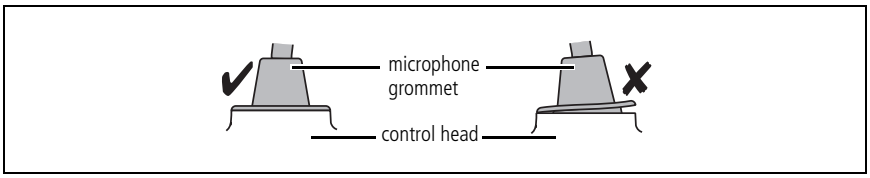

36.3 Adjustment

Adjust the output sensitivity of the desktop microphone using the control accessible from the underside of the desktop microphone,.

The microphone sensitivity is set to maximum by turning the control fully clockwise.

36.4 Radio Programming

The desktop microphone has an internal pre-amplifier. Therefore, the dynamic microphone support in the UI Preferences form of the radio's programming application should not be enabled.

36.5 Interface Specification

The following table and diagram summarizes the signals used for the desktop microphone on the radio's microphone connector and shows the interface between the desktop microphone and the radio.

Table 36.1 Desktop microphone connector—pins and signals

Pin	Signal	Description
1	—	not connected
2	—	not connected
3	—	not connected
4	MIC_PTT	PTT
5	MIC_AUD	audio from the microphone
6	AGND	analogue ground
7	—	not connected
8	—	not connected

© Tait Electronics Limited November 2007

37 TMAA10-08 Desktop Microphone

The TMAA10-08 desktop microphone is an omnidirectional electret microphone which can be used in dispatch situations, where the microphone is positioned on a flat surface.
The desktop microphone plugs into the microphone socket on the radio control head.

The desktop microphone has an internal pre-amplifier and an adjustable output control on the underside of the desktop microphone base.

37.1 Operation

Press the PTT key to transmit. Speak clearly into the microphone and release the PTT key when you have finished talking.

To use the Monitor function, press the MONITOR key and check whether the channel is clear. When Monitor is active, the MONITOR LED lights up. Press the MONITOR key again to turn Monitor off. The LED goes out. If the channel is clear, press the PTT key to transmit.

If the FUNCTION key is programmed, press it to activate the programmed function.

37.2 Installation

Important The desktop microphone grommet must be installed whenever the desktop microphone is plugged into the microphone socket. When installed, the grommet has two functions:

- to prevent damage to the microphone socket when there is movement of the microphone cord, and
- to ensure that the control head is sealed against water, dust and other environmental hazards.

1. Plug the microphone cord into the microphone socket on the radio control head.
2. Slide the grommet along the cord and push two adjacent corners of the grommet into the microphone socket cavity.

© Tait Electronics Limited November 2007

3. Squeeze the grommet and push the remaining corners into position.
4. Check that the grommet is seated correctly in the cavity.

Figure 37.1 Correct desktop microphone grommet seating

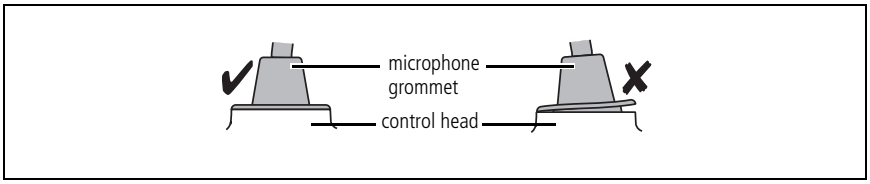

37.3 Adjustment

Adjust the output level of the desktop microphone using the control accessible from the underside of the desktop microphone,.

The microphone sensitivity is set to maximum by turning the control fully clockwise.

37.4 Radio Programming

UI Preferences form

Check the settings of the following fields in the UI Preferences form of the TM8100 or TM8200 programming application:

- TM8100 radios: Set the **Control Head Mic Gain** field to Normal and clear the **Enable Options Board Preamp** check box. These are both default settings.
- TM8200 radios: In the Audio tab, clear the **Dynamic Mic Support** check box. This is the default setting.

Programming the FUNCTION key

Program the FUNCTION key as follows:

1. Set the required action for the function key:
   - TM8100 radios: Assign a function to one of the function keys in the **Function Key Actions** field in the Key Settings form.
   - TM8200 radios: Assign a function to one of the function keys in the **Function Key Actions** field in the Conv Key Settings form (conventional radios) or MPT Key Settings form (trunking radios).
2. Set **CH_GP101** to ‘Input’, ‘Active Low’ and assign the action ‘Simulate F1 to F4 Key’ (Programmable I/O form, Digital tab).

© Tait Electronics Limited November 2007

Programming the MONITOR key

Program the MONITOR key according to the hookswitch settings in the TM8100 or TM8200 programming application, as follows:

1. TM8100 radios: Select the **Hookswitch Monitor** check box, and select an option in the **Hookswitch Monitor Overrides** field (Networks > Basic Settings form > Receiver Monitoring tab).

2. TM8200 conventional radios: Select the **Hookswitch Monitor** check box, and select an option in the **Hookswitch Monitor Overrides** field (Conventional > Networks > Basic Settings form > Receiver Monitoring tab).

Refer to the online help of the programming application for more information.

37.5 Interface Specification

The following table and diagram summarizes the signals used for the desktop microphone on the radio's microphone connector and shows the interface between the desktop microphone and the radio.

Table 37.1 Desktop microphone connector—pins and signals

	Pin	Signal	Description
	1	—	not connected
	2	—	not connected
	3	—	not connected
	4	MIC_PTT	PTT
	5	MIC_AUD	audio from the microphone
	6	AGND	analogue ground
	7	—	not connected
	8	—	not connected

© Tait Electronics Limited November 2007

© Tait Electronics Limited November 2007

38 TOPA-SV-024 Test Unit

The TOPA-SV-024 test unit is used to test and maintain Tait portable and mobile radios by providing an interface between the radio, a test PC, and an RF communications test set.

The diagram below shows the front panel of the test unit.

Figure 38.1 TOPA-SV-024 test unit

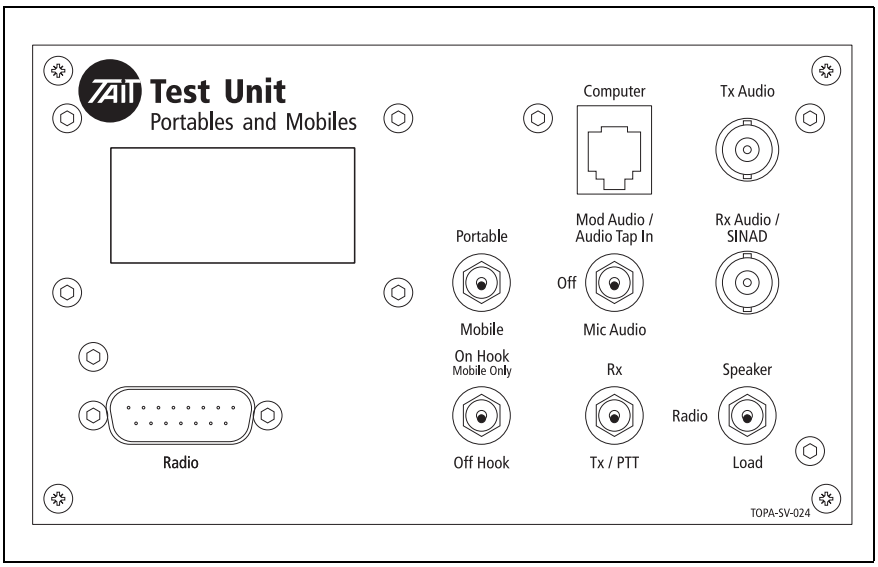

38.1 Test Equipment Setup

The diagram on the following page shows how the test unit is connected to the radio, the test PC, and the RF communications test set.

Note The test unit can also be connected to a Tait Orca portable radio (TOP) using the TOPA-SV-007 cable, or to a T2000 radio using the T2000-11 cable. Use with Tait Orca and T2000 radios is not described in this document.

© Tait Electronics Limited November 2007

Figure 38.2 Test equipment setup

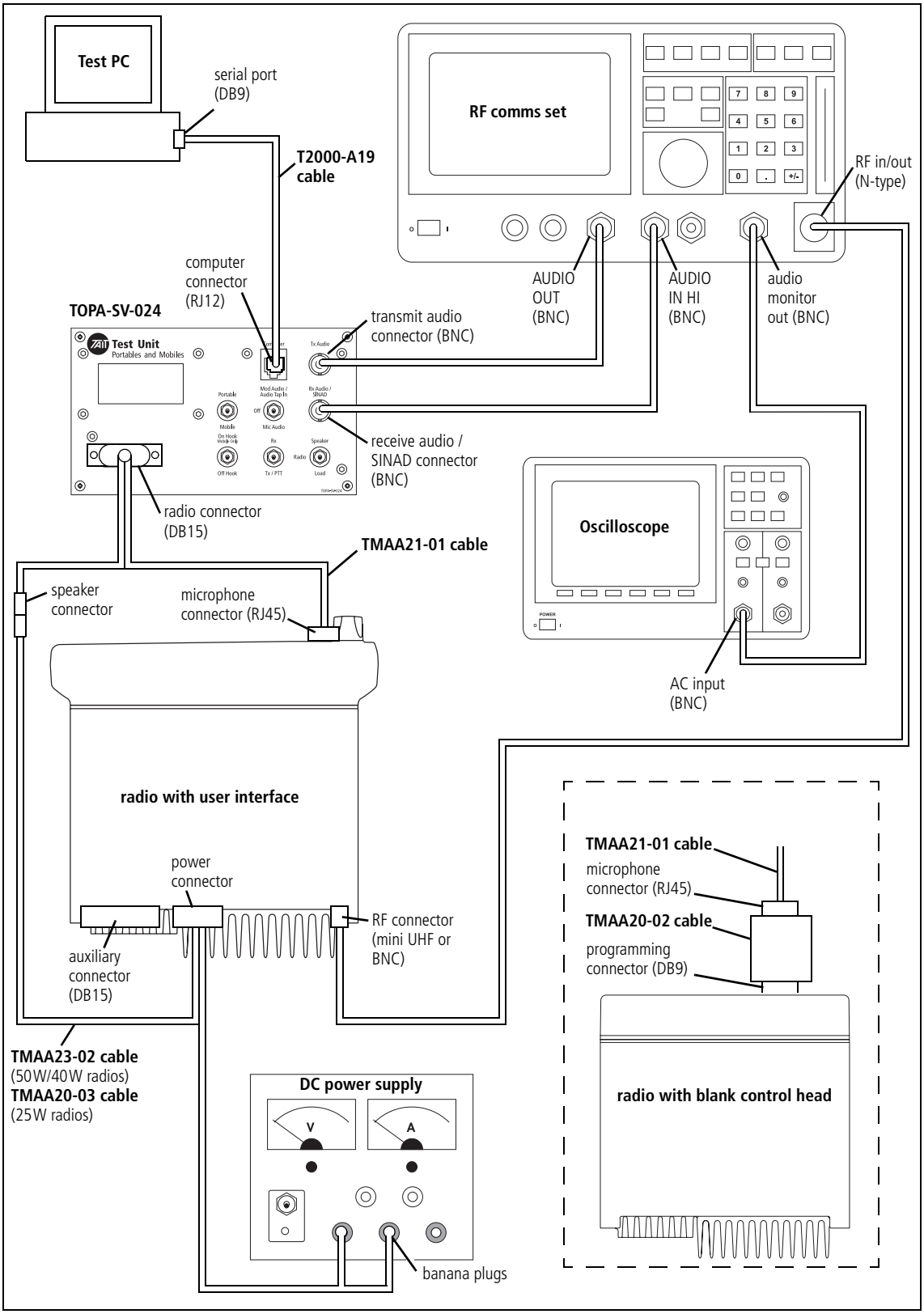

© Tait Electronics Limited November 2007

38.2 Operation

This section explains the function of the TOPA-SV-024 test unit controls. The procedure for using the test unit is described in the relevant section on test equipment setup.

38.2.1 Portable / Mobile Switch

This 2-way toggle switch is used to switch attenuation resistors (R4, R5, R6) in and out of the line from the radio's positive speaker output to the positive **Rx Audio/SINAD** output of the test unit (before the isolating transformer).

- When set to **Portable**, the attenuation resistors are switched out.
- When set to **Mobile**, the attenuation resistors are switched in (attenuation 10:1).

Important Selecting the wrong switch position may result in incorrect SINAD readings and damage to the test unit.

38.2.2 Mod Audio/Audio Tap In / Off / Mic Audio Switch

This 3-way toggle switch is used to switch between **Mod Audio/Audio Tap In**, **Mic Audio**, and **Off** (no audio signal).

- With the Tait Orca portables, this switch can be used for setting up dual point modulation by applying modulation to different parts of the radio.
- For normal transmit deviation tests (other portables and mobiles), this switch is set to **Mic Audio**.

38.2.3 On Hook / Off Hook Switch

Important When using the test unit with portables, the **On Hook** / **Off Hook** toggle switch **must** be set to **Off Hook**. Portables do not have a hookswitch, and if the switch is set to **On Hook**, the accessory function key of the portable is activated.

This 2-way toggle switch is used to simulate the microphone hookswitch opening ("hook off") and closing ("hook on"). This is done by switching a 12kΩ resistor (R3) in or out of the MIC_PTT line.

- When set to **Off Hook**, the 12kΩ resistor (R3) is switched out of the MIC_PTT line. This simulates the microphone being removed from the microphone clip.
- When set to **On Hook**, a 12kΩ resistor (R3) is switched into the MIC_PTT line. This simulates the microphone being placed on the microphone clip.

© Tait Electronics Limited November 2007

38.2.4 Rx / Tx/PTT Switch

This 2-way toggle switch is used to switch between receive and transmit mode.

- When set to **Rx**, the PTT line is switched to high impedance.
- When set to **Tx/PTT**, the PTT line is pulled to ground.

38.2.5 Speaker / Radio / Load Switch

This 3-way toggle switch is used during receive audio tests to switch the audio to the test unit speaker (**Speaker**), to the radio's internal speaker (**Radio**) or to a dummy load consisting of R1 and R2 (**Load**).

Note This switch does not disconnect the radio's internal speaker on mobiles. If the switch is set to **Speaker** or **Load**, this simulates an external speaker being connected in parallel to the radio's internal speaker.

With all settings, a low level audio signal is available for testing through the SINAD port.

Portable

- When set to **Speaker**, only the speaker of the test unit is active.
- When set to **Radio**, only the speaker of the portable is active.
- When set to **Load**, no speaker is active. The audio signal is terminated in the test unit dummy load.

Mobile

- When set to **Speaker**, the speakers of the test unit and the mobile are both active. The speaker of the mobile cannot be disconnected.
- When set to **Radio**, only the speaker of the mobile is active.
- When set to **Load**, the speaker of the mobile remains active.

© Tait Electronics Limited November 2007

38.3 PCB Information

38.3.1 Parts List (PCB IPN 220-01418-02A Rev. 4)

Ref.	IPN	Description
BNC1	240-02100-11	Skt Coax BNC 3.5mm Pnl N/Tag
BNC2	240-02100-11	Skt Coax BNC 3.5mm Pnl N/Tag
C1	011-54100-01	Cap Cer Al 1n 10% T/C B 50v
C2	011-54100-01	Cap Cer Al 1n 10% T/C B 50v
C3	020-59100-06	Cap Elec Rdl 100m 16v 6.3x11
C4	011-54100-01	Cap Cer Al 1n 10% T/C B 50v
PL1	240-00010-55	Plg 15w Drng W-Wrap Pnl Mtg
PL2	240-04021-60	Skt 6w Modr Ph Vrt T-Ent
R1	032-31820-01	Res M/F Pwr 17x5 8e2 5% 2.5w
R2	032-31820-01	Res M/F Pwr 17x5 8e2 5% 2.5w
R3	030-55120-20	Res Flm 4x1.6 12k 5% 0.4w
R4	030-53560-20	Res Flm 4x1.6 560e 5% 0.4w
R5	030-54270-20	Res Flm 4x1.6 2k7 5% 0.4w
R6	030-52560-20	Res Flm 4x1.6 56e 5% 0.4w
R7	030-55100-20	Res Flm 4x1.6 10k 5% 0.4w

Ref.	IPN	Description
SW1	230-00010-42	Sw Tgl On Off On Dpdt Ms500hb
SW2	230-00010-57	Sw Tgl Dpdt On-On Pnl Mtg
SW3	230-00010-03	Sw Tgl Spst Mini Pnl Mtg
SW4	230-00010-16	Sw Tgr Spst 3-Pos Pnl Mtg
SW5	230-00010-03	Sw Tgl Spst Mini Pnl Mtg
TRAN	054-00010-17	Xfmr Line 600 Ohm 1:1
Not part of the PCB:		
SPKR	032-31820-01	Res M/F Pwr 17x5 8e2 5% 2.5w
	250-00010-19	Spkr C/W Rubber Sealing Ring

38.3.2 PCB Layout

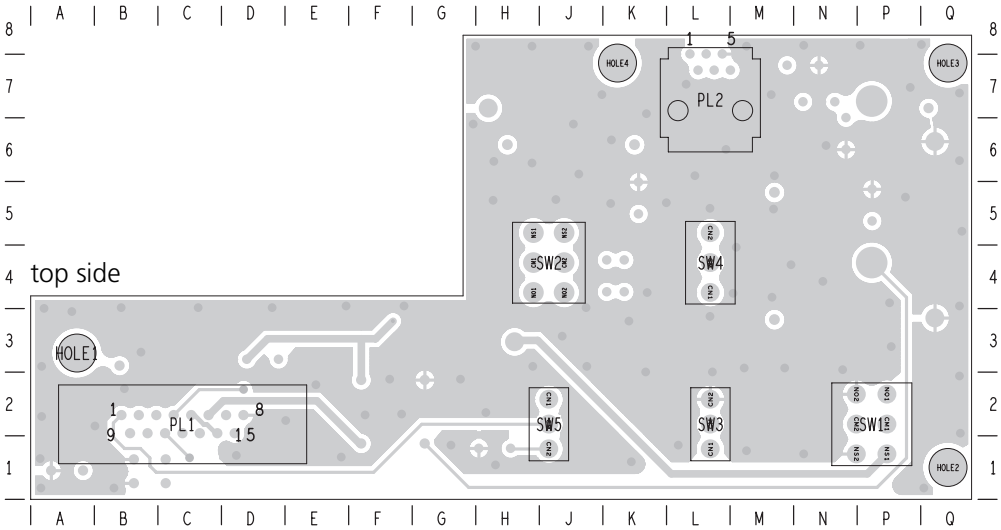

IPN 220-01418-02

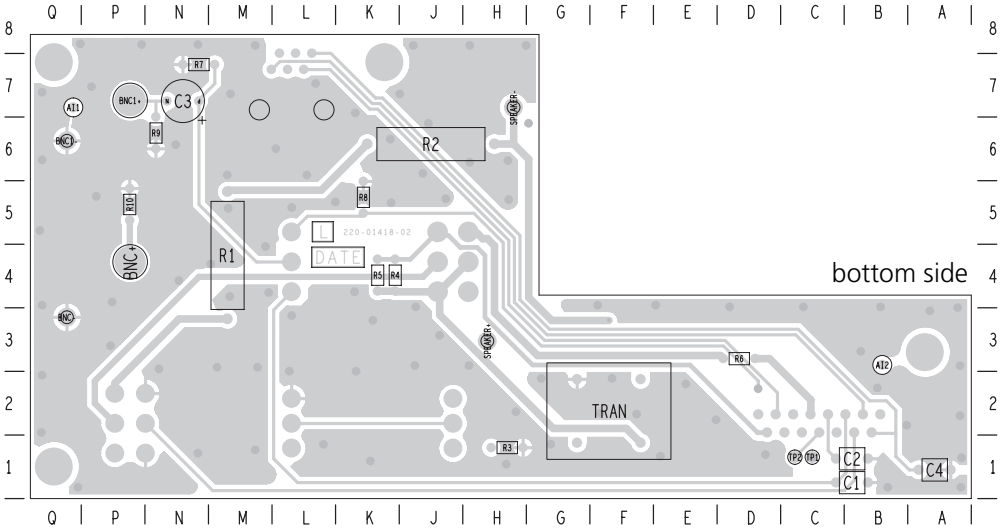

© Tait Electronics Limited November 2007

38.3.3 Circuit Diagram

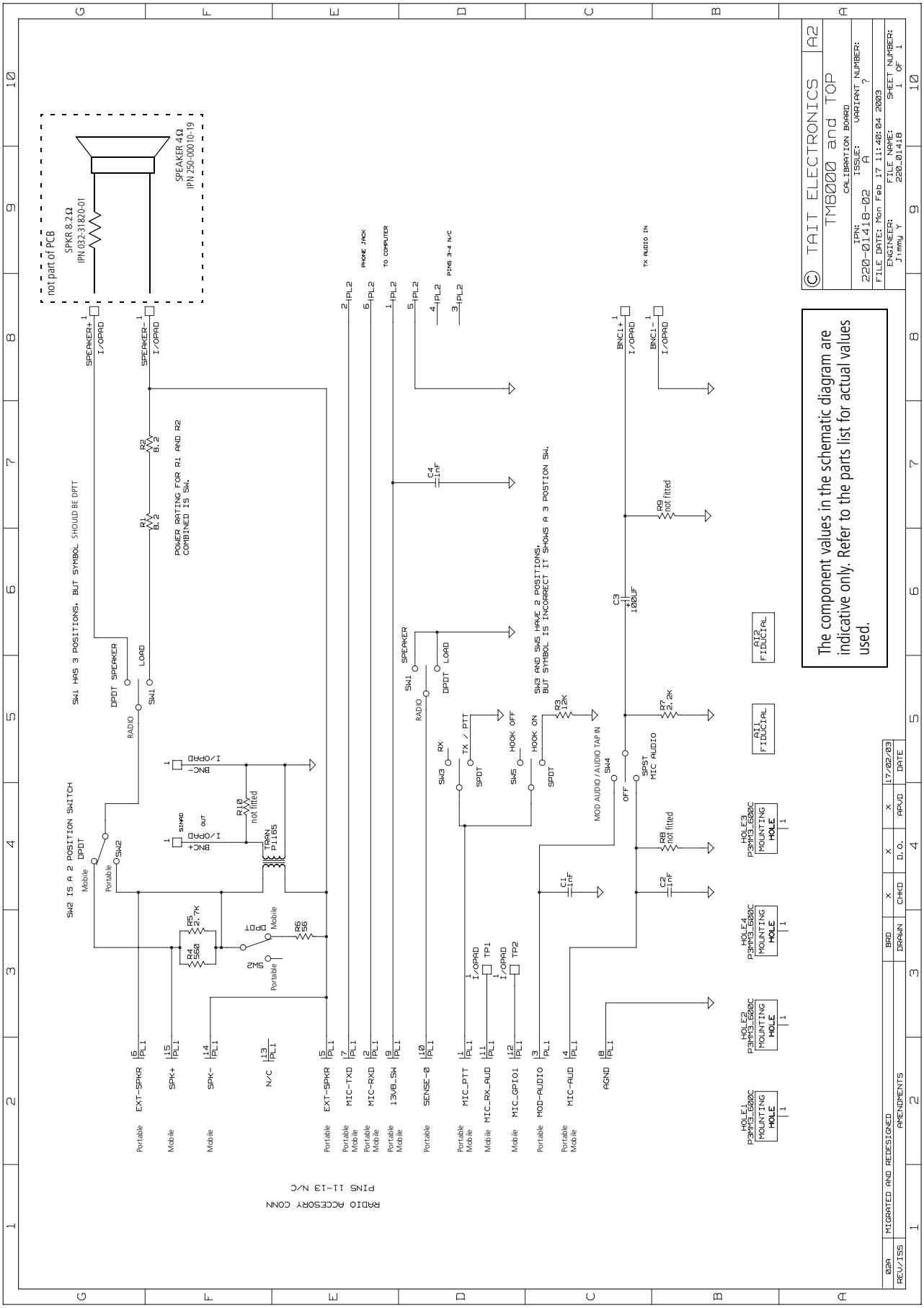

© Tait Electronics Limited November 2007

Tait General Software Licence Agreement

This legal document is an Agreement between you (the "Licensee") and Tait Electronics Limited ("Tait"). By using any of the Software or Firmware items prior-installed in the related Tait product, included on CD or downloaded from the Tait website, (hereinafter referred to as "the Software or Firmware") you agree to be bound by the terms of this Agreement. If you do not agree to the terms of this Agreement, do not install and use any of the Software or Firmware. If you install and use any of the Software or Firmware that will be deemed to be acceptance of the terms of this licence agreement.

The terms of this Agreement shall apply subject only to any express written terms of agreement to the contrary between Tait and the Licensee.

Licence

TAIT GRANTS TO YOU AS LICENSEE THE NON-EXCLUSIVE RIGHT TO USE THE SOFTWARE OR FIRMWARE ON A SINGLE MACHINE PROVIDED YOU MAY ONLY:

1. COPY THE SOFTWARE OR FIRMWARE INTO ANY MACHINE READABLE OR PRINTED FORM FOR BACKUP PURPOSES IN SUPPORT OF YOUR USE OF THE PROGRAM ON THE SINGLE MACHINE (CERTAIN PROGRAMS, HOWEVER, MAY INCLUDE MECHANISMS TO LIMIT OR INHIBIT COPYING, THEY ARE MARKED "COPY PROTECTED"), PROVIDED THE COPYRIGHT NOTICE MUST BE REPRODUCED AND INCLUDED ON ANY SUCH COPY OF THE SOFTWARE OR FIRMWARE; AND / OR

2. MERGE IT INTO ANOTHER PROGRAM FOR YOUR USE ON THE SINGLE MACHINE (ANY PORTION OF ANY SOFTWARE OR FIRMWARE MERGED INTO ANOTHER PROGRAM WILL CONTINUE TO BE SUBJECT TO THE TERMS AND CONDITIONS OF THIS AGREEMENT).

THE LICENSEE MAY NOT DUPLICATE, MODIFY, REVERSE COMPILE OR REVERSE ASSEMBLE ANY SOFTWARE OR FIRMWARE IN WHOLE OR PART.

Important Notice

THE SOFTWARE OR FIRMWARE MAY CONTAIN OPEN SOURCE SOFTWARE COMPONENTS ("OPEN SOURCE COMPONENTS"). OPEN SOURCE COMPONENTS ARE EXCLUDED FROM THE TERMS OF THIS AGREEMENT EXCEPT AS EXPRESSLY STATED IN THIS AGREEMENT AND ARE COVERED BY THE TERMS OF THEIR RESPECTIVE LICENCES WHICH MAY EXCLUDE OR LIMIT ANY WARRANTY FROM OR LIABILITY OF THE DEVELOPERS AND/OR COPYRIGHT HOLDERS OF THE OPEN SOURCE COMPONENT FOR THE PERFORMANCE OF THOSE OPEN SOURCE COMPONENTS. YOU AGREE TO BE BOUND BY THE TERMS AND CONDITIONS OF EACH SUCH LICENCE. FOR MORE INFORMATION SEE: http://support.taitworld.com/go/opensource

Title to Software

THIS AGREEMENT DOES NOT CONSTITUTE A CONTRACT OF SALE IN RELATION TO THE SOFTWARE OR FIRMWARE SUPPLIED TO THE LICENSEE. NOT WITHSTANDING THE LICENSEE MAY OWN THE MAGNETIC OR OTHER PHYSICAL MEDIA ON WHICH THE SOFTWARE OR FIRMWARE WAS ORIGINALLY SUPPLIED, OR HAS SUBSEQUENTLY BEEN RECORDED OR FIXED, IT IS A FUNDAMENTAL TERM OF THIS AGREEMENT THAT AT ALL TIMES TITLE AND OWNERSHIP OF THE SOFTWARE OR FIRMWARE, WHETHER ON THE ORIGINAL MEDIA OR OTHERWISE, SHALL REMAIN VESTED IN TAIT OR THIRD PARTIES WHO HAVE GRANTED LICENCES TO TAIT.

Term and Termination

THIS LICENCE SHALL BE EFFECTIVE UNTIL TERMINATED IN ACCORDANCE WITH THE PROVISIONS OF THIS AGREEMENT. THE LICENSEE MAY TERMINATE THIS LICENCE AT ANY TIME BY DESTROYING ALL COPIES OF THE SOFTWARE OR FIRMWARE AND ASSOCIATED WRITTEN MATERIALS. THIS LICENCE WILL BE TERMINATED AUTOMATICALLY AND WITHOUT NOTICE FROM TAIT IN THE EVENT THAT THE LICENSEE FAILS TO COMPLY WITH ANY TERM OR CONDITION OF THIS AGREEMENT. THE LICENSEE AGREES TO DESTROY ALL COPIES OF THE SOFTWARE OR FIRMWARE AND ASSOCIATED WRITTEN MATERIALS IN THE EVENT OF SUCH TERMINATION.

© Tait Electronics Limited November 2007

Limited Warranty

THE SOFTWARE OR FIRMWARE (INCLUDING OPEN SOURCE COMPONENTS) IS SUPPLIED BY TAIT AND ACCEPTED BY THE LICENSEE "AS IS" WITHOUT WARRANTY OF ANY KIND EITHER EXPRESSED OR IMPLIED, INCLUDING BUT NOT BEING LIMITED TO ANY IMPLIED WARRANTIES AS TO MERCHANTABILITY OR FITNESS FOR ANY PARTICULAR PURPOSE. THE LICENSEE ACKNOWLEDGES THAT THE SOFTWARE OR FIRMWARE (INCLUDING OPEN SOURCE COMPONENTS) IS USED BY IT IN BUSINESS AND ACCORDINGLY TO THE MAXIMUM EXTENT PERMITTED BY LAW NO TERMS OR WARRANTIES WHICH ARE IMPLIED BY LEGISLATION SHALL APPLY TO THIS AGREEMENT. TAIT DOES NOT WARRANT THAT THE FUNCTIONS CONTAINED IN THE SOFTWARE OR FIRMWARE (INCLUDING OPEN SOURCE COMPONENTS) WILL MEET THE LICENSEE'S REQUIREMENTS OR THAT THE OPERATION OF THE SOFTWARE OR FIRMWARE (INCLUDING OPEN SOURCE COMPONENTS) WILL BE UNINTERRUPTED OR ERROR FREE.

Exclusion of Liability

IN NO CIRCUMSTANCES SHALL TAIT BE UNDER ANY LIABILITY TO THE LICENSEE, OR ANY OTHER PERSON WHATSOEVER, WHETHER IN TORT (INCLUDING NEGLIGENCE), CONTRACT (EXCEPT AS EXPRESSLY PROVIDED IN THIS AGREEMENT), EQUITY, UNDER ANY STATUTE, OR OTHERWISE AT LAW FOR ANY LOSSES OR DAMAGES WHETHER GENERAL, SPECIAL, EXEMPLARY, PUNITIVE, DIRECT, INDIRECT OR CONSEQUENTIAL ARISING OUT OF OR IN CONNECTION WITH ANY USE OR INABILITY OF USING THE SOFTWARE OR FIRMWARE (INCLUDING OPEN SOURCE COMPONENTS).

THE LICENSEE'S SOLE REMEDY AGAINST TAIT WILL BE LIMITED TO BREACH OF CONTRACT AND TAIT'S SOLE AND TOTAL LIABILITY FOR ANY SUCH CLAIM SHALL BE LIMITED AT THE OPTION OF TAIT TO THE REPAIR OR REPLACEMENT OF THE SOFTWARE OR FIRMWARE OR THE REFUND OF THE PURCHASE PRICE OF THE SOFTWARE OR FIRMWARE.

General

THE LICENSEE CONFIRMS THAT IT SHALL COMPLY WITH THE PROVISIONS OF LAW IN RELATION TO THE SOFTWARE OR FIRMWARE.

Law and Jurisdiction

THIS AGREEMENT SHALL BE SUBJECT TO AND CONSTRUED IN ACCORDANCE WITH NEW ZEALAND LAW AND DISPUTES BETWEEN THE PARTIES CONCERNING THE PROVISIONS HEREOF SHALL BE DETERMINED BY THE NEW ZEALAND COURTS OF LAW. PROVIDED HOWEVER TAIT MAY AT ITS ELECTION BRING PROCEEDINGS FOR BREACH OF THE TERMS HEREOF OR FOR THE ENFORCEMENT OF ANY JUDGEMENT IN RELATION TO A BREACH OF THE TERMS HEREOF IN ANY JURISDICTION TAIT CONSIDERS FIT FOR THE PURPOSE OF ENSURING COMPLIANCE WITH THE TERMS HEREOF OR OBTAINING RELIEF FOR BREACH OF THE TERMS HEREOF.

No Dealings

THE LICENSEE MAY NOT SUBLICENSE, ASSIGN OR TRANSFER THE LICENCE OR THE PROGRAM EXCEPT AS EXPRESSLY PROVIDED IN THIS AGREEMENT. ANY ATTEMPT OTHERWISE TO SUBLICENSE, ASSIGN OR TRANSFER ANY OF THE RIGHTS, DUTIES OR OBLIGATIONS HEREUNDER IS VOID.

No Other Terms

THE LICENSEE ACKNOWLEDGES THAT IT HAS READ THIS AGREEMENT, UNDERSTANDS IT AND AGREES TO BE BOUND BY ITS TERMS AND CONDITIONS. THE LICENSEE FURTHER AGREES THAT SUBJECT ONLY TO ANY EXPRESS WRITTEN TERMS OF AGREEMENT TO THE CONTRARY BETWEEN TAIT AND THE LICENSEE THIS IS THE COMPLETE AND EXCLUSIVE STATEMENT OF THE AGREEMENT BETWEEN IT AND TAIT IN RELATION TO THE SOFTWARE OR FIRMWARE WHICH SUPERSEDES ANY PROPOSAL OR PRIOR AGREEMENT, ORAL OR WRITTEN AND ANY OTHER COMMUNICATIONS BETWEEN THE LICENSEE AND TAIT RELATING TO THE SOFTWARE OR FIRMWARE.

© Tait Electronics Limited November 2007