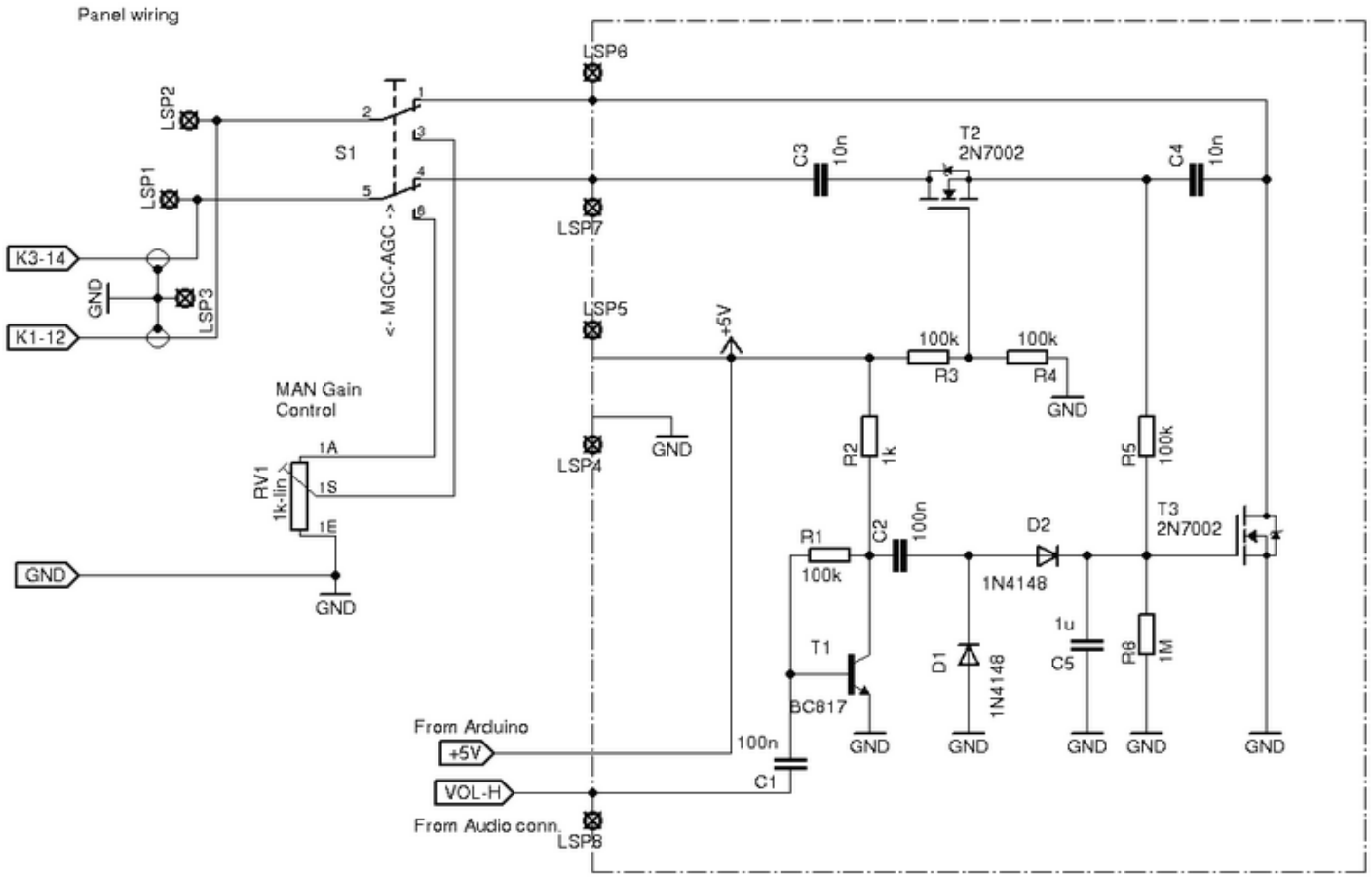

Originally designed, tested and publised by ND8T, at http://www.nd8t.com/uBITX/AGC.htm

This layout was experimented by YO5QCD and published at https://qsl.net/yo5qcd/nd8t-agc.htm

AGC smd r2

25.12.2018 22:03

Sheet: 1/1

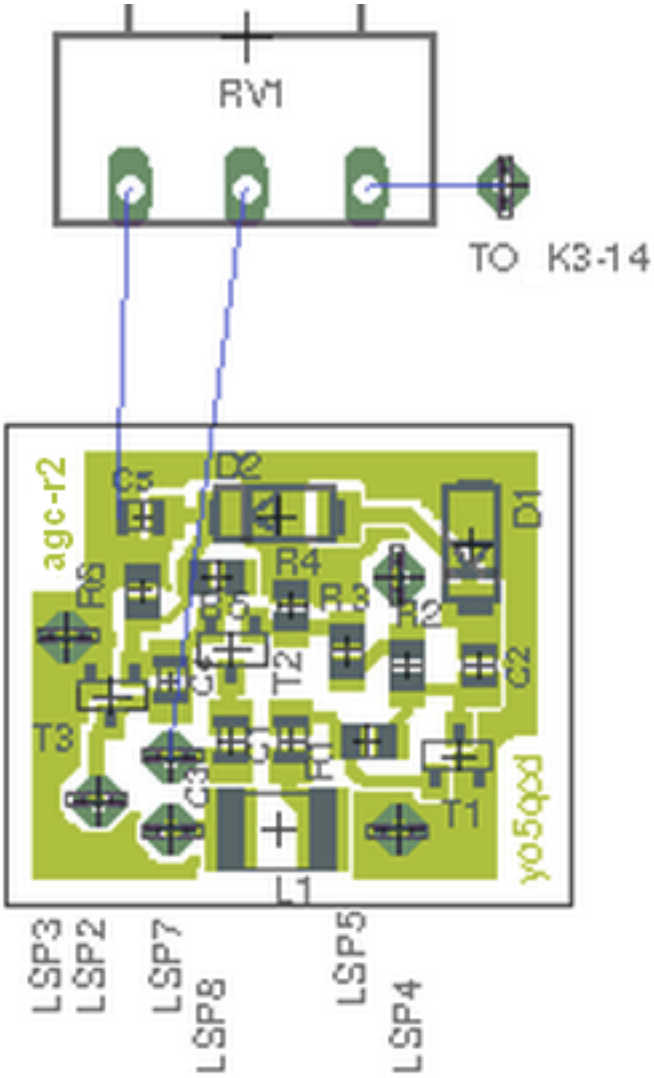
agc-r2
R6
C3
D2
R4
C5
T2
C1
T3
C4
C6
R1
L1
R3
R2
D1
C2
T1
yo5qxd
LSP3
LSP2
LSP7
LSP8
LSP5
LSP4
RV1
TO K3-14

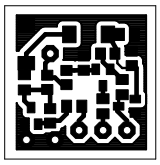

28.12.2018 10:53 mirrored /home/livius/eagle/uBITX hacks/AGC/AGC smd r2.brd