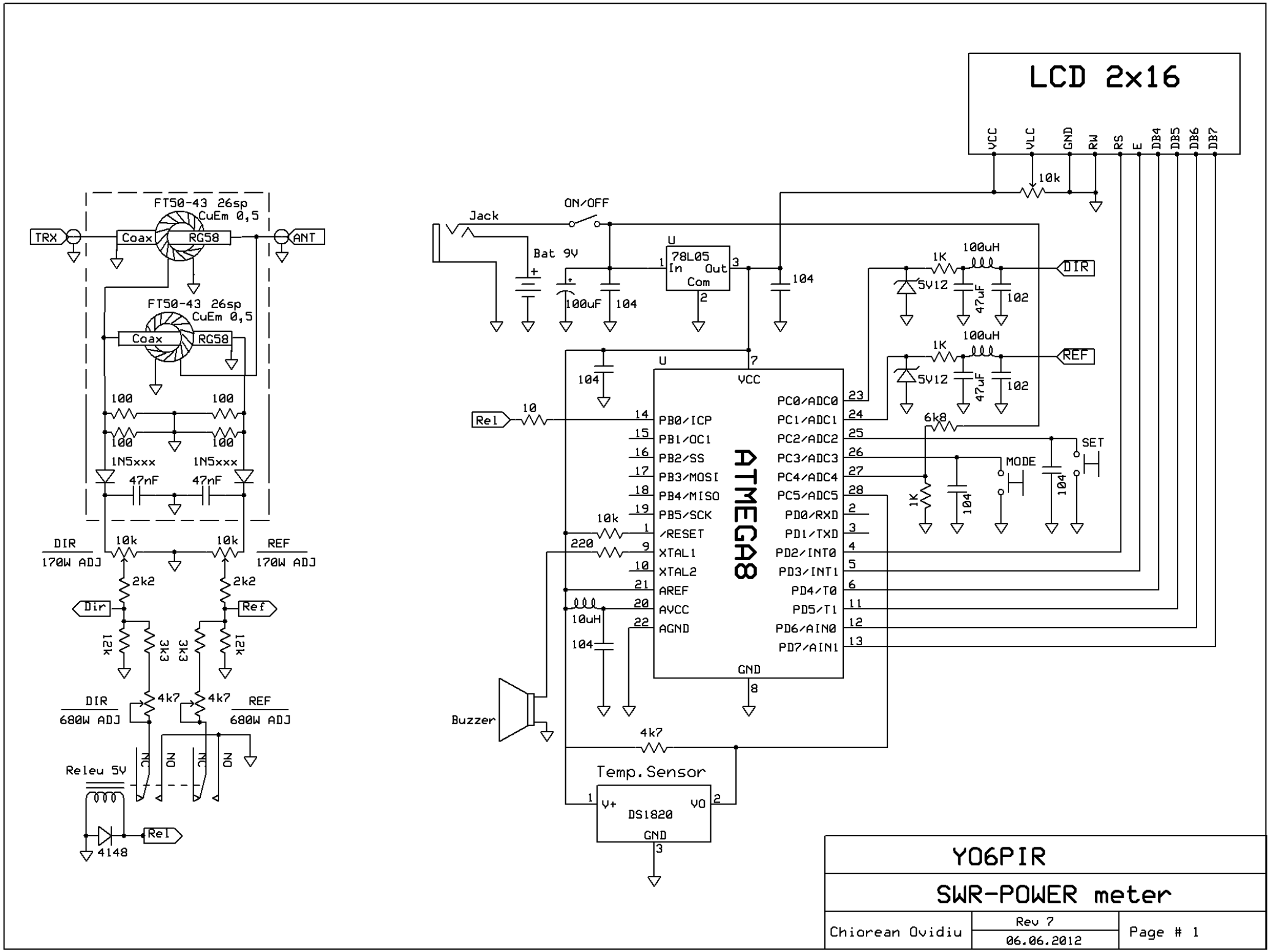
LCD 2x16
VCC
VLC
GND
RW
RS
E
DB4
DB5
DB6
DB7
10k
ON/OFF
Jack
Bat 9V
100uF
104
U
78L05
In
Out
Com
1
2
3
104
1K
100uH
5V1Z
47uF
102
DIR
REF
ATMEGA8
VCC
GND
PB0/ICP
PB1/OC1
PB2/SS
PB3/MOSI
PB4/MISO
PB5/SCK
/RESET
XTAL1
XTAL2
AREF
AVCC
AGND
PC0/ADC0
PC1/ADC1
PC2/ADC2
PC3/ADC3
PC4/ADC4
PC5/ADC5
PD0/RXD
PD1/TXD
PD2/INT0
PD3/INT1
PD4/T0
PD5/T1
PD6/AIN0
PD7/AIN1
Rel
10
10k
220
10uH
6k8
SET
MODE
Buzzer
4k7
Temp.Sensor
V+
VO
DS1820
GND
TRX
ANT
Coax
RG58
FT50-43 26sp
CuEm 0,5
100
1N5xxx
47nF
DIR
170W ADJ
REF
170W ADJ
2k2
Dir
Ref
12k
3k3
4k7
DIR
680W ADJ
REF
680W ADJ
Releu 5V
NC
NO
4148
Rel
Y06PIR
SWR-POWER meter
Chiorean Ovidiu
Rev 7
06.06.2012
Page # 1