PASTORCICI ROBERT
YO4HFU - 2010

TYPE TR-0614
PROGRAMMABLE SIGNAL GENERATOR

TYPE TR-0615 International Electronical Commission - ADAPTER UNIT IEC 11728
TYPE TR-0616 FREQUENCY-DOUBLE 1179

Manufacturer: WORK FOR ELECTRONIC H-1163 Budapest Cziräky and 26-32 MEASURINGTURNED OUT. Teleprinter; 22-45-35. Exporter: METRIMPEX HUNGARIAN OUTER TRADING VENTURE FOR PRODUCTS THE INSTRUMENT INDUSTRY Letter address: H-1391 Budapest, p.o. box 202.

1.INTENDED PURPOSE AND AREA OF APPLICATION

The programmable **signal generator type 1172** is a Signaiquelle of high working reliability, composed of semiconductor elements. The broad frequency range (l - 520 MHz) is correct with that one that, the same Kategoerie belonging, most modern signal generators. It makes the INTERNATIONAL ELECTRONICAL COMMISSION for adapter unit possible type 11728 that the programmable signal generator type 1172 also in International Electronical Commission Meßsys more temer: (those the regulations of the lEC publications No. 625-1 and 625-2 correspond) one uses. By the adapter unit one knows the frequency of the signal generator within the range of the IEC-bus 1-520 MHz in l-kHz--Steps, which Modulation (CW, TO, FMxl, FMxlOO) and the position of the exit HF divisor from 0 to -129dB railways in 1-dB - steps program.

The FREQUENCY-DOUBLE type 11729 is a passive signal converter, which does not produce spurious signals.

2. TECHNICAL DATA

2.1 Frequency range:
1 MHz - 520 MHz 1 kHz

2.1.1. Dissolution of frequency: 1Khz

2.1.2. Frequency accuracy: CW and AT + the 0.001% FMxl + (0.001% + 10 kHz) FMxl00 ± (0.001% + 45 kHz)

2.1.3. Stability of frequency: CW and AM ± 0,5 • 10~6/h (after two-hour warming up time) ± 0,2. 10~6/h (after three-hour warming up time) FMxl ± 500 Hz/10 min

2 .2. Original data

2.2.1. Output level: +13 dMb… -127 dßm (1 V - 0,1uV)

2.2.1.1. Level attitude: in 12 x 10-railway-gradates range of the stepless attitude: 11dB

2.2.1.2. Level reading: calibrated in dBm and V railways at the indicating instrument

2.2.1.3. Level accuracy: between +13 and -7dBm
± 1.25dB
railways between -7 and -77 dBm
± 1.95dB
railways between -77 and -127dBm
± 2.75dB

2.2.1.4. Components of the level accuracy frequency response: railways ± 0.75 dB railways between +13 and -7 dBm

Errore instrument: ± 0.5dB

Step-Attenuator: ± 0.7dB (to 70dB)
± 1.5dB (to 120dB)

2.2.2. Output impedance: 50 Ω

2.2.2.1. VSWR: ≤1,3 under the output level of ≤0,1 V

2.2.3. Harmonic wave distance: ≥ 30dB railways between 10 and 520 MHz
≥ 20dB railways between 1 and 10 MHz under +10 dBm output levels

2.2.4. Countershaft distance

Basic signal range	Countershaft range	Countershaft distance
1-3Mhz	1-3Mhz	≥ 60dB
3-250Mhz	3-250Mhz	≥ 60dB
3-350Mhz	3-350Mhz	≥ 50dB
3-520Mhz	3-1000Mhz	≥ 35dB

under +10 dBm output levels

2.2.5 AM Disturb distance: ≥ 55dB railways. under the carrier level, within the range 50 Hz -15 kHz

2.2.6 FM Disturb distance: ≤250 Hz, within the range 50 Hz - 15 kHz

2.3 Amplitude modulation: These values are valid for the carrier level of ≤3dB railways an amplitude modulation are possible also over the level of +3 dBm, if the point of the output signal does not exceed +13 dBm

2.3.1. Modulating frequency:

Internally: 400Hz 1Khz ±5%

Externally: 0 - 20Khz (3dB)

Modulation tension need: 10Vvv / 600 Ω

2.3.2Modulation factor: 0-90%

2.3.3Modulation distortion factor: (with 1 kHz modulating frequency)

≤3%/ up to one 70% igen AM

≤5% up to 80% igen AM

2.3.4Modulation indicating instrument

Measuring range: 0-100%

Frequency range: 20hz-20Khz

Accuracy: ± (0.05 M + 5) %, where " M" the adjusted modulation factor (%) means

2.4. Frequency modulation

2.4.1. Modulating frequency:

Internally: 400Hz , 1Khz ±5%

Externally: 0-25Khz (1dB)

2.4.2. Stroke: 0-5Khz (FMx1)

0-500Khz (FMx100)

2.4.3. Distortion factor: (with 1 kHz modulation frequency) ≤4% (with a stroke of 3-500 kHz)

2.4.4. Stroke measuring instrument

Measuring range: 0-5Khz (FMx1)

0-500Khz (FMx100)

Frequency range: 20Hz - 20Khz
Accuracy: ±250Hz (FMx1)
±35Khz (FMx100)

2.4.5. After pressures of the key " VERNIER" the key sequence MODULATION FREQ. the stroke indicating instrument the pushing shows on (only in positive direction)

2.5. Programmability

The equipment can be operated in the modes of operation REMOTE and LOCAL ONES

2.5.1. In the mode of operation LOCAL ONES are adjusted the desired characteristic values with the operating organs at the front plate.

2.5.2. In the mode of operation REMOTE leave themselves the following characteristic values programming:
Frequency: between 1 MHz and 520 MHz in 1-kHz steps

Modes of operation: CW - AM - FMxl - FMx100

Exit HF divisor:
within the range 0… -129dB railways in 1-dB- steps (as 0dB -railway- reference the level of +13dBm)

In the mode of operation REMOTE are ineffective the operating organs of the programmable parameters present on the front plate. The parameters stopped by programming do not arrive at the front plate at the announcement. Programming is made by the socket present on the backing plate via BCD code (negative logic), with TTL levels or by means of short-circuit at mass in BCD code. The International Electronical Commission interface unit type 11728 (TR-0615) makes possible that the generator in a measuring system with IEC bus is used.

2.6. Net data

2.6.1. Tension: 110, 127, 220 V ±10%
2.6.2. Frequency: 50/60 Hz
2.6.3. Capacity: 100 VA

2.7. Dimensions: 443 x 177 x 354 mm.
2.8. Mass: 16 kg
2.9. Climatic conditions
2.9.1. Normal and ratings
2.9.1.1. Ambient temperature: +10..+35C
2.9.1.2. Relative humidity: max 85%
2.9.1.3. Air pressure: 600...1060mbar
2.9.2. Border operating conditions
2.9.2.1. Ambient temperature: +5...+40C
2.9.2.2. Relative humidity: max 98%
2.9.2.3 Air pressure: 600..1060mbar

2.9.3. Transportation and conditions of support
2.9.3.1. Ambient temperature: -25...+55C
2.9.3.2. Relative humidity: max 98%
2.9.3.3. Air pressure: 600..1060mbar
2.10. 1Periodic impact test
2.10.1. Length of time of the impact: 12ms
2.10.2. Maximum value of acceleration: 50m/s^2
2.10.3. Number of the impacts: 1000
2.11. The equipment corresponds to following standards and/or recommendations
2.11.1. MSZ 94-70
2.11.2. RSZ 2657-73 RSZ 3824-73 RSZ 3825-73 RSZ 4492-74

3. Scope of Supply
3.1. Programmable signal generator type 1172 (TR-0614)
3.2. Accessories
3.2.1. Accessories " A" (contained in the equipment purchase price)
Type of 1004 mains cables with wall plugs 1 pc.
Type 1021 shielded coaxial cable (Micro 9, 8), with ever a N-plug at both ends of 1 pc.
Type 1024 shielded coaxial cable with ever a BNC plug at both ends of 1 pc. Extension map (0360006236) 1 pc. Extension map (180 x 140 mm with 96 inlets) above with a socket strip KONTAKTA DS 2582-296-5 1 pc. SMC BNC adapter
(33SMC-BNC-5Ö-2 Suhner) 1 pc. Contact strip (64polig) AMPHENOL TUCHEL C 133-714A 96P (33) 1 pc. fork wrench (9150002841) 2 pc. operating instructions 1 ex. Sicherungseinsätze H. SCHURTER 220 V - 800 raA (FST + 800 mA + 5x20) 1 pc. HO V and/or 127 V - 1.6 A (FST + 1.6 A

+ 5x20) 2 pc. 800 mA (FST + 800 mA + 5x20) 1 pc. 1.6 A (FST + 1.6 +5x20) 2 pc. MSZ 8863/2 66 3.15 A (Go 20/5.2 - 3.15 A) 2 pc.
3.2.2. Accessories " C" (on special order, against additional price available)

3.2.2.1. International Electronical Commission adapter unit type 11728 (TR-0615)

3.2.2.1 .1. Functional data

3.2.2.1.1.1. The address of the equipment and the parallel polling line allocation can be placed with the switches at the backing plate. If the signal generator is to function to all data communication procedures with in the International Electronical Commission system the taking place constantly as a Listenei., can this condition with the switch " Ion" at the backing plate to be adjusted.

3.2.2.1.1.2. The adapter unit is able to fulfill the following interface functions. •AH1 (ACCEPTOR HANDSHAKE) - receiver-lateral handshake - inter - . facefunktion This function ensures the correct receipt ability Multi-wire instructions and - data. Left (LISTENER) - list he interface function If the interface is addressed, it is able to transfer data. The adapter unit can of the IEC-bus or by local Linsteilung with the help of the switch " Ion" are addressed. RL1 (REMOTE-LOCAL) - remote control - local control. It can be caused by this function that during remote control the local operating organs become ineffective. PP2 (PARALLEL POLLING) - parallel querying This function causes that the interface for the control unit gives an answer, which is characteristic for the condition of the signal generator. The generator produces the desired frequency by FLL circuits. If one of the PLL circuits is open, the generator is shifted into the condition UNLOCK. About this condition the interface can inform the control unit in the course of parallel querying. In the designation the number 2 refers PP2 to the circumstance hat the allocation of the parallel polling line is to be performed on the spot. A programming is not possible.

3.2.2.1.2. Electrical signals

The signals spent over the plug connector International Electronical Commission to BUS correspond in the International Electronical Commission publication to the No. 625-1 specified regulations. The signals supplied by way of this plug connector must likewise correspond to the regulations of the aforementioned publication. The maximum speed of the data communication amounts to 80 KByte/s and those the address and command transmission 30U KByte/s. by the signal generator the arriving and this supplied signals is - with exception of only one signal - signals with

TTL level. The exception forms the signal serving for the announcement of the condition UNLOCK: +18 V UNLOCK
0 V LOCK
This signal can at the point **" a7"** the plug connector PL20 to be measured. The remaining tax exits can usually with 2 TTL A heitslasten to be loaded. The following exits can also 10 TTL basic loads to be loaded:
a30 a31 c1 c2 c7 c8 c9 c10
The exit C19 is able to head for 20 TTL basic loads.
3.2.2.1.3. Supply voltage data
3.2.2.1.3.1. Tensions: Equal stabilized +5 V tension 8 V ground-free, not-stabilized DC voltage
3.2.2.1.3.2. Capacity: of +5 V: 100 mA of 8 V: 300 mA
3.2.2.1.4. Dimensions 250 x 140 x 43 mm
3.2.2.1.5. Mass: ca. 1 kg
3.2.2.2. Frequency-double type 11729 (TR-0616)
3.2.2.2.1. Frequency
3.2.2.2.1.1. Input signal frequency: 200 - 520 MHz
3.2.2.2.1.2. Output signal frequency: 400 - 1040 MHz
3.2.2.2.2. Entrance: N
3.2.2.2.1. Feed impedance: 50 Ω
3.2.2.2.2. VSWR: max. 2
3.2.2.2.3. Capacity range of the input signal: +13...+19dBm
3.2.2.2.4. Maximum achievement of the input signal: +22dBm
3.2.2.2.5. Harmonic content of the input signal: ≤ -30dB
3.2.2.2.6. Exit VSWR of the driver generator: max. 2
3.2.2.2.7. Exit: N
3.2.2.2.8. Output impedance: 50 Ω
3.2.2.2.9. Transformation loss: ≤ -13dB
3.2.2.2.10. Harmonic content of the output signal: (under the level of the two-kindled signal (f_2))
f_1 (Input signal): min. 20dB
f_3 (3. Harmonic wave of the input signal): min. 20dB
f_4 (4. Harmonic wave of the input signal): min. 10dB
3.2.2.2.3.4. Fluctuation in level of the output signal as a function of the frequency with min. +13-dBm input signal: max. 3dB
3.2.2.2 .4. Dimensions: ø 20 x 80 mm
3.2.2.2.5. Mass: 100 g

4. FUNCTION AND STRUCTURE

The simplified block diagram of the equipment is to be seen in the fig. 1. Due to the diagram the equipment can be arranged into three main parts.

1. Electric circuits for the determination of the HF-output level
2. Modulation electric circuits
3. Electric circuits for the determination of the carrier frequency (Frequency synthesizer)

4.1. Electric circuits for the determination of the HF of output level

At the determination of the HF-output level 3 units are involved.

1. Broadband amplifier M9
2. AT - reference unit the M10
3. Step Attenuator M16

The HF-signal with low level, arriving from the Frequency synthesizer, is put to the broadband amplifier M9, which strengthens it on one, over +13 dBm lying level.

The output level of the amplifier can be steered in a 25-dB range.

The level reference electric circuit present at the map M10 steers that, in the amplifier M9 PIN diode regulation circuit present. The output level is regulated by change of the DC reference level. In the same way also amplitude modulation is caused. In addition - as reference levels of the HF-output level serving - DC voltage the modulation signal is overlaid.

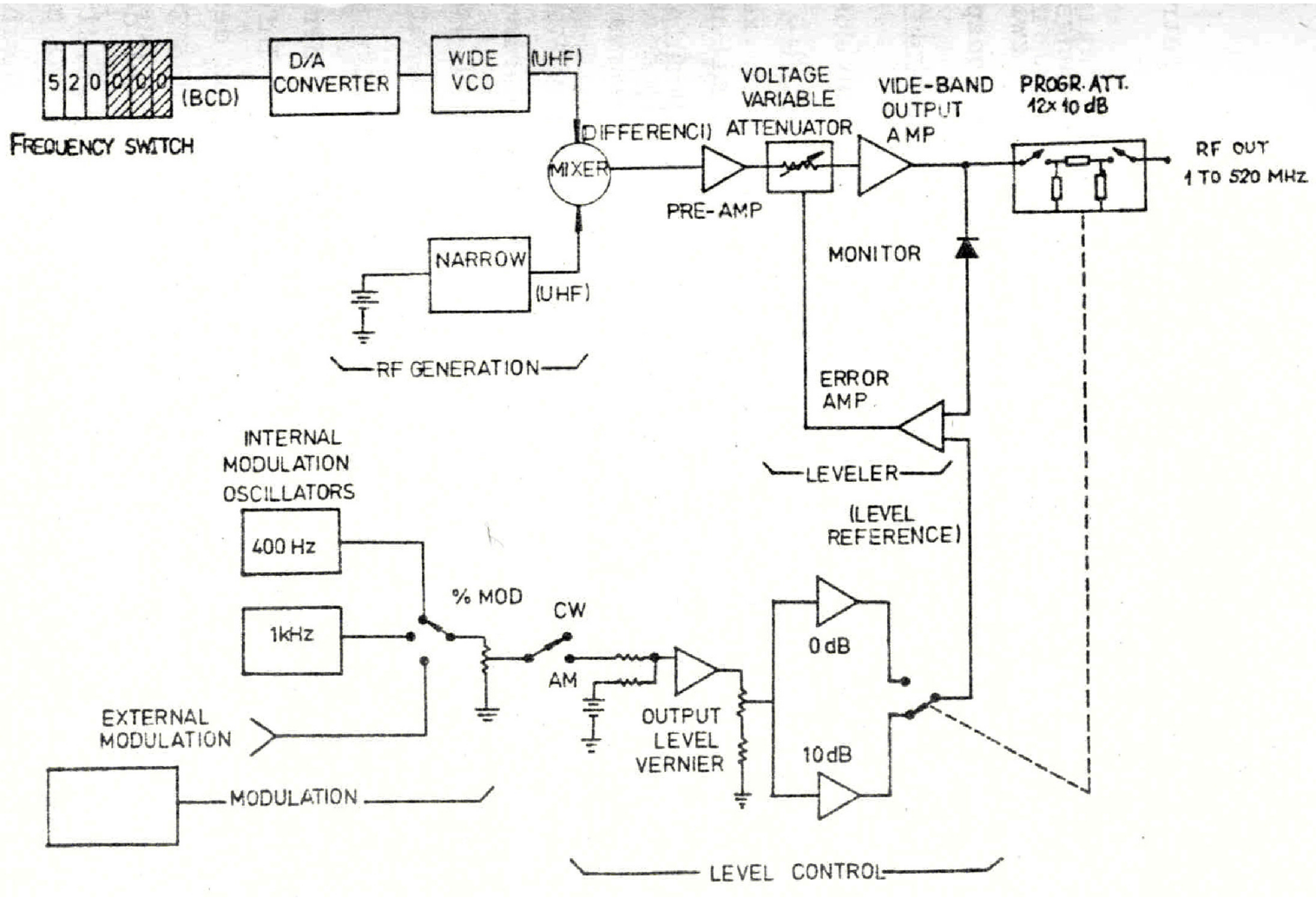

he step Attenuator causes itself one to 120dB extending absorption in 10dB steps. With 0 and +10 dBm output levels the tension division of the step Attenuators amounts to 0. Tension between +10 dBm and 0 dBm becomes by change-over of the reference level realises.

4.2. Modulation electric circuits

On the map M11 the tone generator with switchable frequency (400Hz, 1 kHz) is, to which the internal modulation signal supplies with.

For the purpose the signal of to reference unit M10 is transmitted to amplitude modulation.

For the purpose of the frequency modulation the NF-signal thorn voltage-controlled oscillator M8 and the unit (FM reference) is course-driven to M2.

The unit M8 is tension - frequency - a converter, which produces basic signal in uncontrolled condition a 2-MHz. Due to the control by the tension the frequency of the basic signal takes depending upon too or off whether the amplitude of the control signal is positive or negative. The output signal of the oscillator is transmitted to the Frequenzsynthesisier electric circuit.

4.3. Frequency synthesisier electric circuit

The output frequency extending from 1 to 520 MHz is a frequency difference, which develops during the mixture of two HF-Oscillator signale. Both basic oscillators become of basic signal is " Narrow band oscillator" (1198 MHz) and " Broadband oscillator " (1199 MHz - 1718 MHz) supplied.

4.4. PLL circuits

With signal generators working according to the same principle the attainable frequency accuracy without PLL circuits would amount to with max. 1 MHz dissolution only 3 MHz. If against it appropriate phase-locked loop is used, leaving a frequency accuracy of 0,001% and a dissolution of 1 kHz to obtain itself.

The PLL circuits PLL1, PLL2, PLL4 stabilize the Frequen: the broadband oscillator (VCO**w**) and they co-ordinate in 1-kHz steps.

PLL3 stabilizes the narrow band oscillator (VCO**N**) and with assistance taken place also the frequency modulation.

<u>PLL1</u>

The circuit has the task to produce a signal whose frequency changes between 10,000 and 9,001 kHz in 1-kHz-steps, if the position of the kHz switches serving for adjusting the frequency is changed from 000 to 999. This signal serves as reference signal for the PLL4. Fig. 2 is the block diagram of PLL1. This circuit contains a voltage-controlled oscillator (VCO), whose frequency changes between 9 and 10 MHz. Further parts are a phase detector and a programmable Frequency divider. The signal of the VCO arrives into a programmable frequency divider. The divisor is steered via the three kHz switches at the front plate.

The down-divided frequency becomes in a phase detector also

the 1-khz compared reference signal (with quartz accuracy). If the frequencies of the two signals join in not with one another over, the phase detector supplies an error signal, which detunes the frequency of the VCO in that direction that the frequency difference between the two signals disappears.

PLL2

The circuit has to produce the task a signal, whose frequency changes between 1443 and 1487 MHz in 1-MHz steps, if MHz coding switches present on the front plate is connected through from 000 to 039 MHz. This step combination repeats itself also per 40 MHz in the frequency range extending from 0 to 520 MHz.
The block diagram by PLL2 is to be found in fig. 3.
The PLL2 works up to a small deviation similarly as the PLL1. To the circuit also a mixer and a band filter belong. The two units have the task to shift the frequency of the VCO (1448 - 1487 MHz) on a frequency change from 8-47 MHz to. This shift was necessary because of the lower critical frequency of the programmable divisor and the phase detector.
The remaining electric circuits of this PLL circuit work in a similar way as at PLL1. The programmable divisor mentioned here is steered via the three MHz coding switches. The reference frequency amounts to 1 MHz.

PLL4

The circuit has the task to co-ordinate the frequency of the broadband oscillator between 1198 and 1718 MHz in 1-kHz steps if the coding switches at the front plate of 000,000 MHz

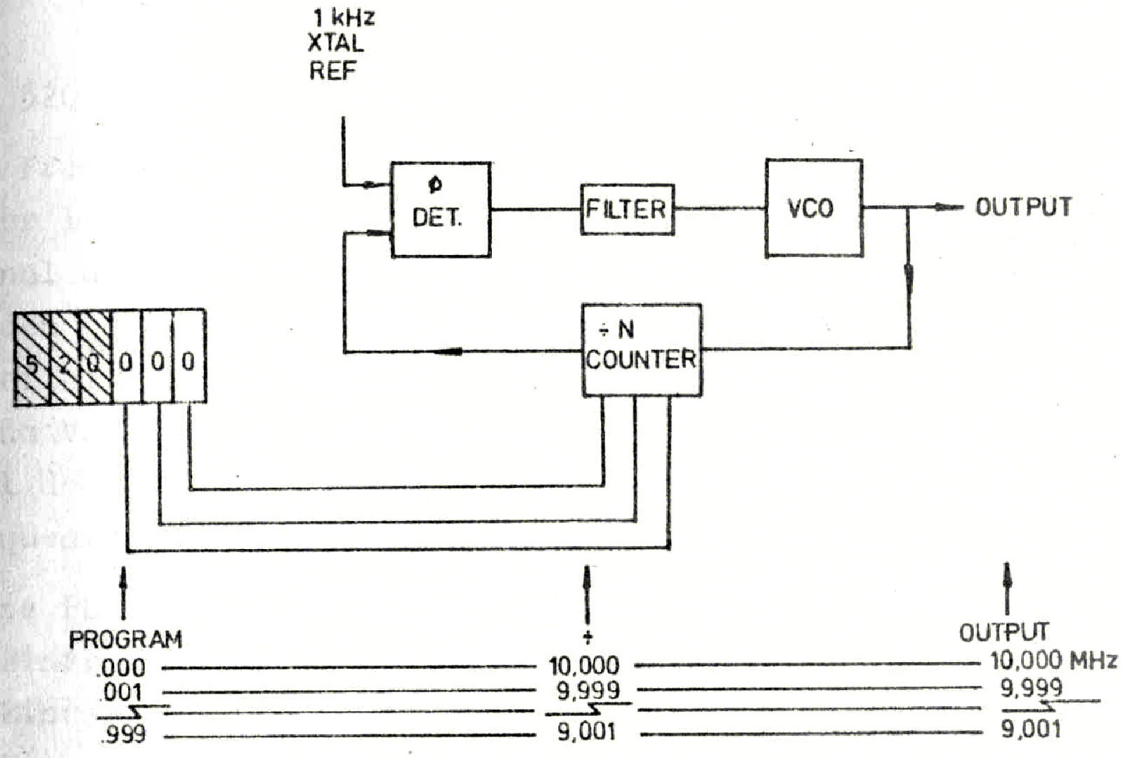
1 kHz
XTAL
REF
φ
DET.
FILTER
VCO
OUTPUT
÷ N
COUNTER
5 2 0 0 0 0
PROGRAM
÷
OUTPUT
.000
.001
.999
10,000
9,999
9,001
10,000 MHz
9,999
9,001

2
1172

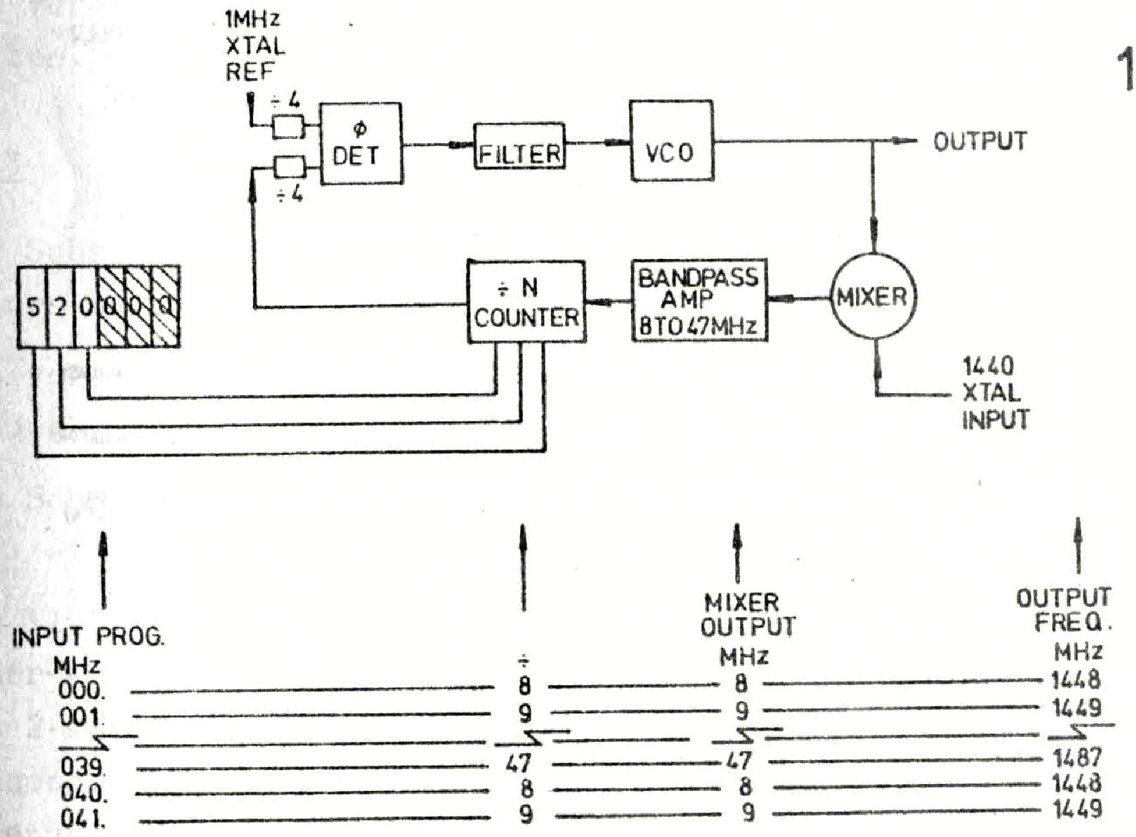
1MHz
XTAL
REF
÷ 4
φ
DET
÷ 4
FILTER
VCO
OUTPUT
5 2 0 0 0 0
÷ N
COUNTER
BANDPASS
AMP
8TO47MHz
MIXER
1440
XTAL
INPUT
INPUT PROG.
MHz
MIXER
OUTPUT
MHz
OUTPUT
FREQ.
MHz
÷
000.
001.
039.
040.
041.
8
9
47
8
9
8
9
47
8
9
1448
1449
1487
1448
1449

3
1172

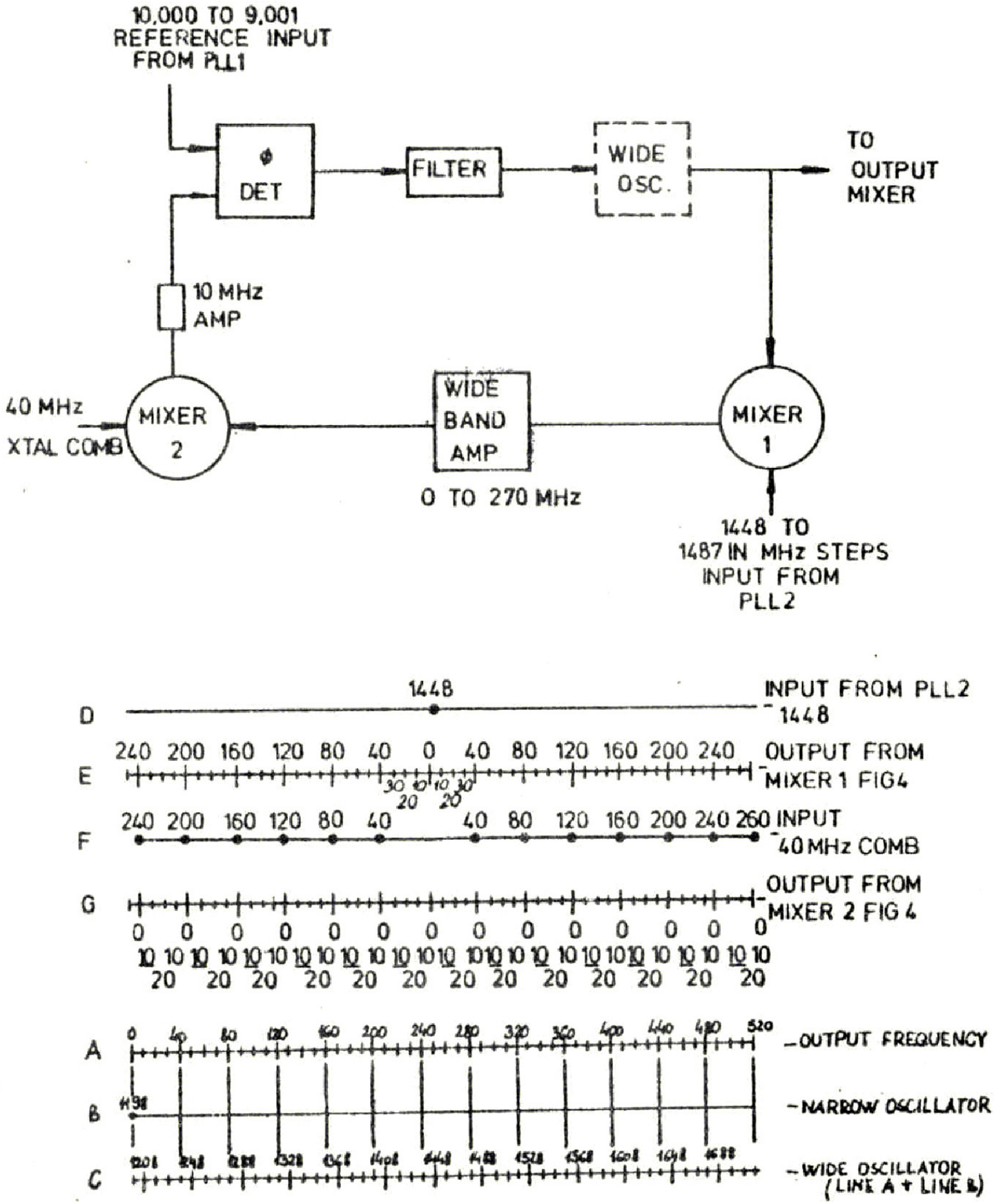
10,000 TO 9,001
REFERENCE INPUT
FROM PLL1
φ
DET
FILTER
WIDE
OSC.
TO
OUTPUT
MIXER
10 MHz
AMP
40 MHz
XTAL COMB
MIXER
2
WIDE
BAND
AMP
0 TO 270 MHz
MIXER
1
1448 TO
1487 IN MHz STEPS
INPUT FROM
PLL2
D
1448
INPUT FROM PLL2
1448
E
240 200 160 120 80 40 0 40 80 120 160 200 240
OUTPUT FROM
MIXER 1 FIG4
F
240 200 160 120 80 40 40 80 120 160 200 240 260
INPUT
40 MHz COMB
G
OUTPUT FROM
MIXER 2 FIG 4
A
0 40 80 120 160 200 240 280 320 360 400 440 480 520
OUTPUT FREQUENCY
B
NARROW OSCILLATOR
C
WIDE OSCILLATOR
(LINE A + LINE B)

FIG. 4

and 520.000 MiIz to be connected through.
The frequency of the broadband oscillator is shifted with the mixers mixer 1 and mixer 2, so that it can be compared with the signal serving as reference signal of PLL1 in the phase detector. If the frequencies that should deviate the phase detector of transmitted both signals from each other, the frequency **VCOw** of the broadband oscillator is shifted by the output error signal of the phase detector in that direction that the frequency difference amounts to 0.

This PLL circuit has three tasks:

1.Engages for each 40-MHz
2. Eitirasten per 1 - MHz
3.engaging for each 1-kHz

The simplified block stop picture of PLL-4 is contained in fig. 4

PLL3

The circuit has the task to stabilize the frequency of the narrow band oscillator.
The simplified block diagram by PLL3 is to be found in fig. 5.
The circuit works in a similar way like PLL1 and PLL2, only no programmable frequency divider is contained in it.
The 1198-MHz signal of the narrow band oscillator is mixed in the mixer with a 1200-MHz-Signal von Quarzgenauigkeit.
The 2-MHz difference signal arrives at the one entrance of the phase detector. At the other entrance a 2-MHz-Referenzsignal arrives. If the frequencies of the two signals should deviate from each other, the error signal of the phase detector detunes the frequency of the narrow band oscillator in that direction that the deviation becomes 0. In the FM mode of operation becomes

2-Mhz reference signal read in the way shown in fig. 6 by a frequency-modulated signal with 2 MHz basic frequency replaced.

Reference signal sources

The reference frequencies are produced for all PLL circuits by a 40-MHz quartz oscillator in the unit M6.

4.5 AM - reference unit the M10 (fig. 7)

The unit has the task to produce the reference tension for the level regulation Rome circle with PIN diodes in the broadband amplifier M9.

On this unit are the electric circuit of the HF of level indicating instrument, the point detector of the indicating instrument for modulation measurement and the digital electric circuits, which the steps - attenuator head for.

The unit is on the printed printed circuit board, which is put into 96 a polige socket strip at the right side of the equipment.

4.5.1. Regulation of the HF-output level

In the mode of operation CW the output level with the potentiometer VERNIER at the front plate over the divisor push buttons can be constantly regulated. The entrance DC tension of the potentiometer arrives at two operation amplifiers, which produce the reference tension for the level regulation Rome circle in the power amplifier (M9).

The one works only in the +10-dBm output level position and the other one in the remaining divisor positions (step Attenuator). In the programmed (remote controlled ten) position the 1-dB becomes steps of the exit HF of level

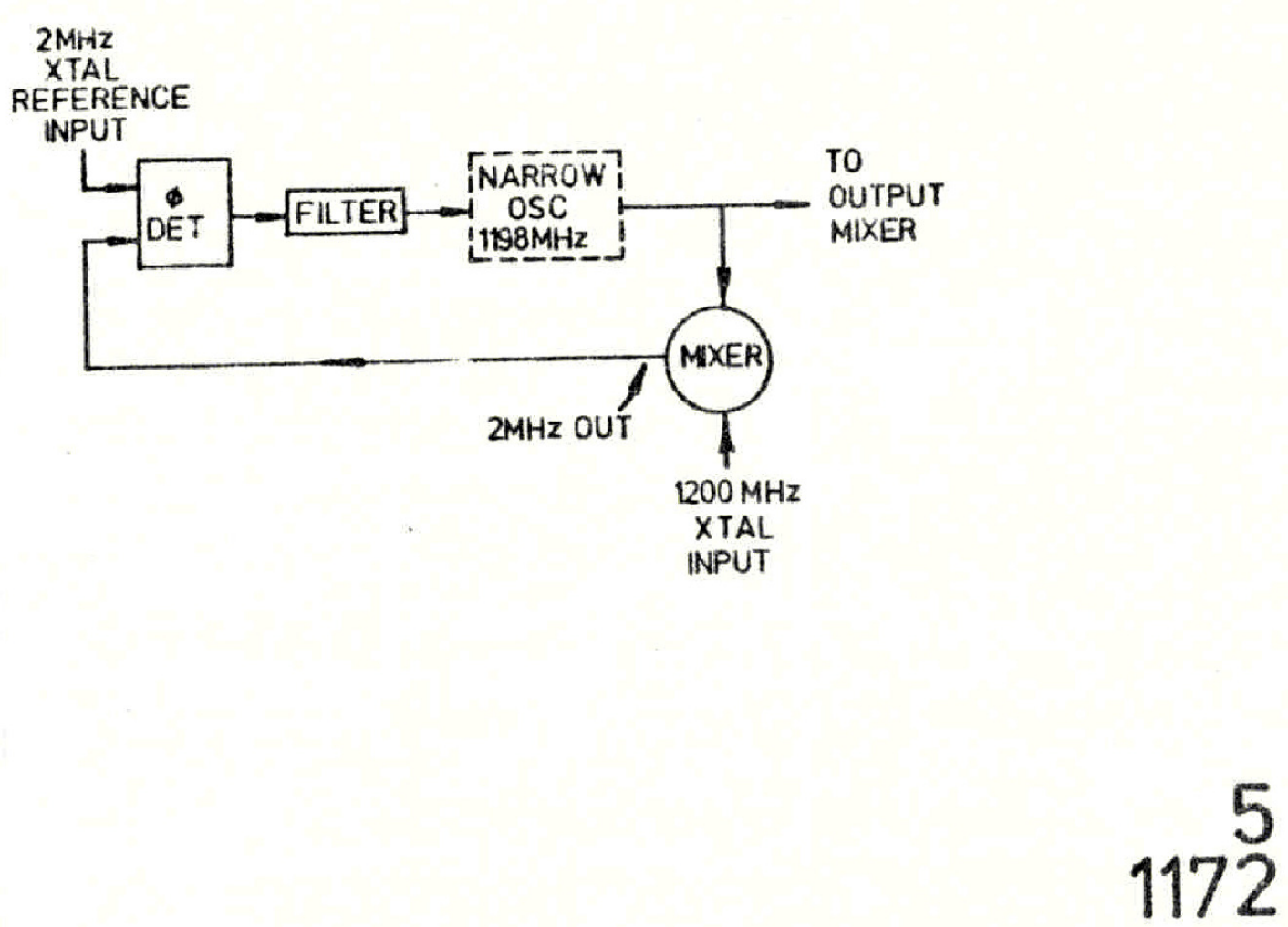
2MHz
XTAL
REFERENCE
INPUT
DET
FILTER
NARROW
OSC
1198MHz
TO
OUTPUT
MIXER
MIXER
2MHz OUT
1200 MHz
XTAL
INPUT
5
1172

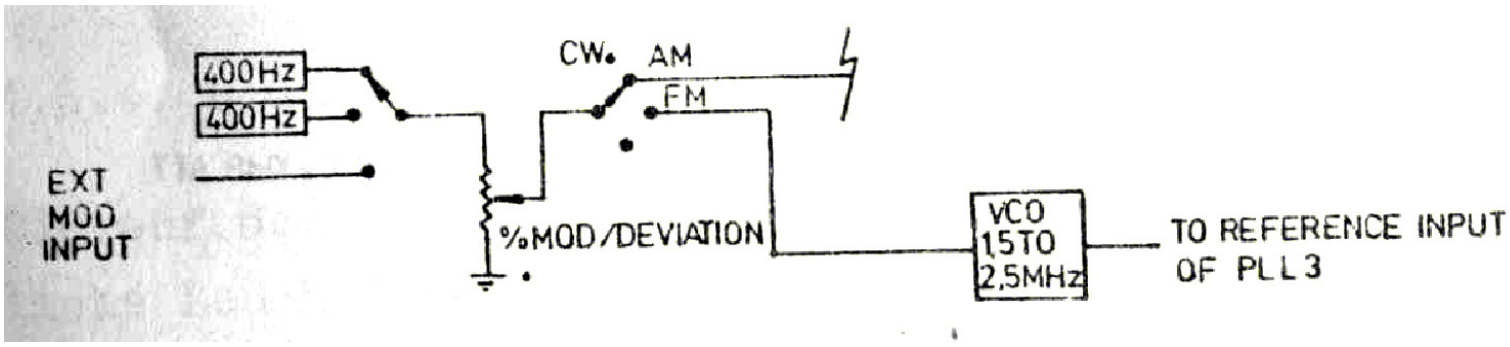
400Hz
400Hz
EXT
MOD
INPUT
CW
AM
FM
%MOD/DEVIATION
VCO
1.5TO
2.5MHz
TO REFERENCE INPUT
OF PLL 3

FIG. 6

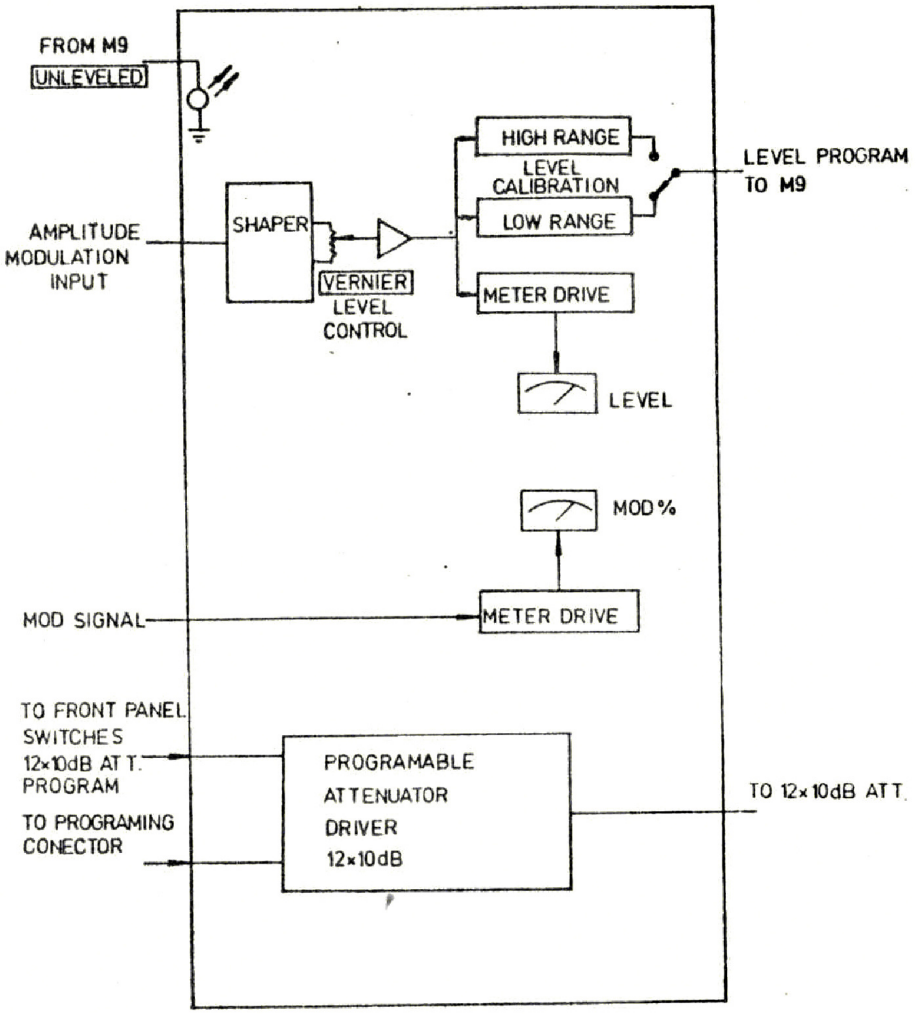

FIG. 7

by the gradual change obtains the same DC tension.

4.5.2. Modulation

The modulation signal arriving from M11 is overlaid the reference tension produced for M9.

4.5.3. Indicating instruments

The HF level indicating instrument is steered of DC voltage (after appropriate tension shift), which is derived of the potentiometer VERNIER. The modulation factor and the frequency departure indicating instrument of the modulation NF tension arriving from the map M10 over a point detector one heads for.

4.5.4. Illuminated readout " UNLEVELLED" (not regulated)

At the right side the light emitting diode present begins to shine for the front plate of the equipment, if the level regulation circuits at the border of the correct function is. (One finds a detailed description during the description of M9).

4.6. Modulation unit M11 (Fig. 8)

This unit supplies the modulation signal needed for the amplitude and frequency modulation. Also the illuminated readouts (LED), present on the front plate, ACCURACY (accuracy) who from here steered. This unit contain that electric circuit, which in that

Mode of operation REMOTE the regulation of the output level in 1-dB- Steps performs.

4.6.1. Modulation signals

In the modes of operation FM and AM the same modulation signal arrives at the electric circuit determined by the position mode selector. The modulation signal source (externally or internally) is selected with the modulating frequency switch.

Possible internal modulation signals:

1. DC voltage (push button VERNIER)
2. 400Hz, 1 kHz With more internally 400Hz - and/or 1-kHz-Modulation is out-led there modulation signal to the socket EXT (BNC) (e.g. with the measurement of an oscillograph for synchronization purposes).

4.6.2. Light emitting diodes to the accuracy announcement

These are operated by that mode selectors. It can be read off, with which frequency accuracy in the given mode of operation can be measured. If one the PLL--Circuits does not work, begin the light emitting diodes to flash.

4.7. Power pack (fig. 9)

The power pack supplies the remaining units of the equipment with the necessary supply voltages.

4.7.1. Transformer and electric rectifier

The mains voltage (110, 127 or 220 V) becomes on for those

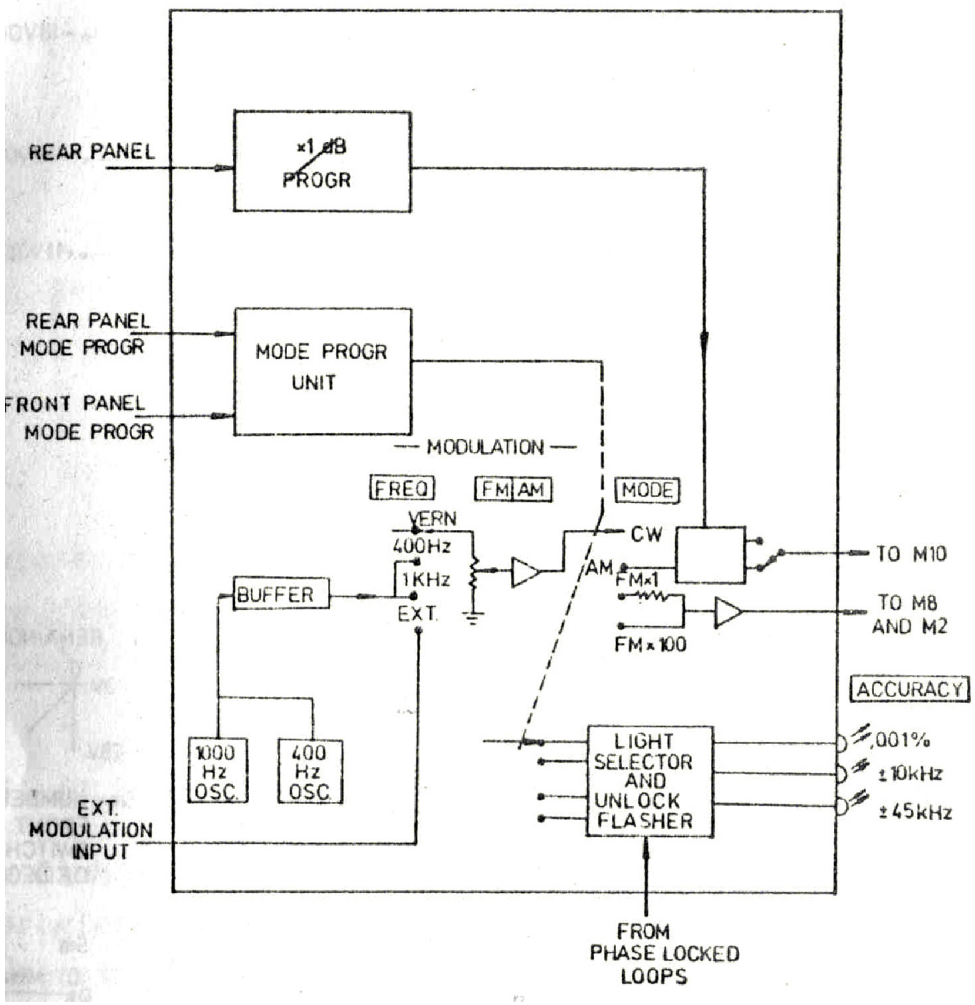

FIG. 8

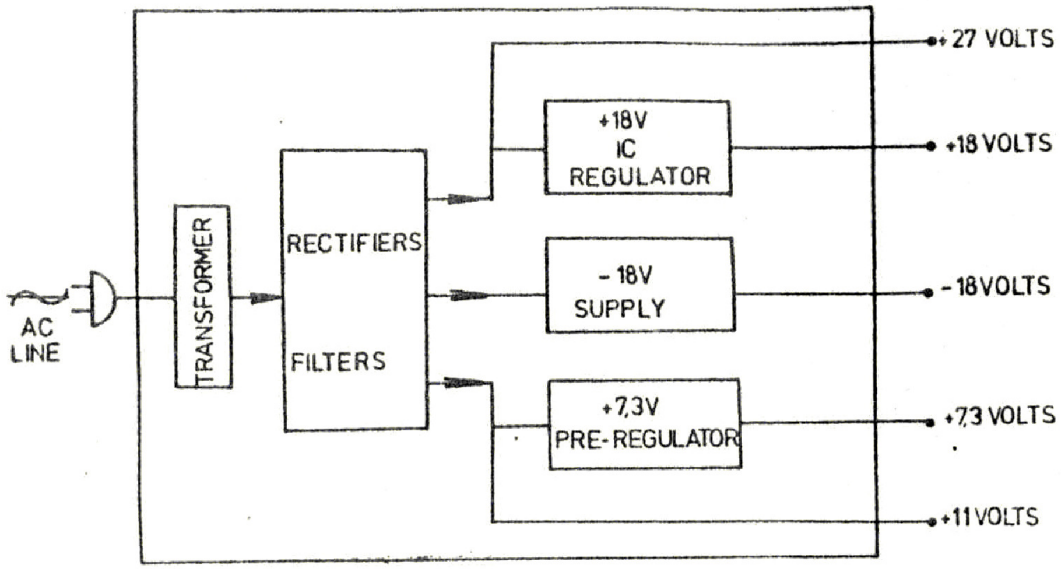
AC LINE
TRANSFORMER
RECTIFIERS
FILTERS
+18V IC REGULATOR
-18V SUPPLY
+7,3V PRE-REGULATOR
+27 VOLTS
+18 VOLTS
-18 VOLTS
+7,3 VOLTS
+11 VOLTS

FIG. 9

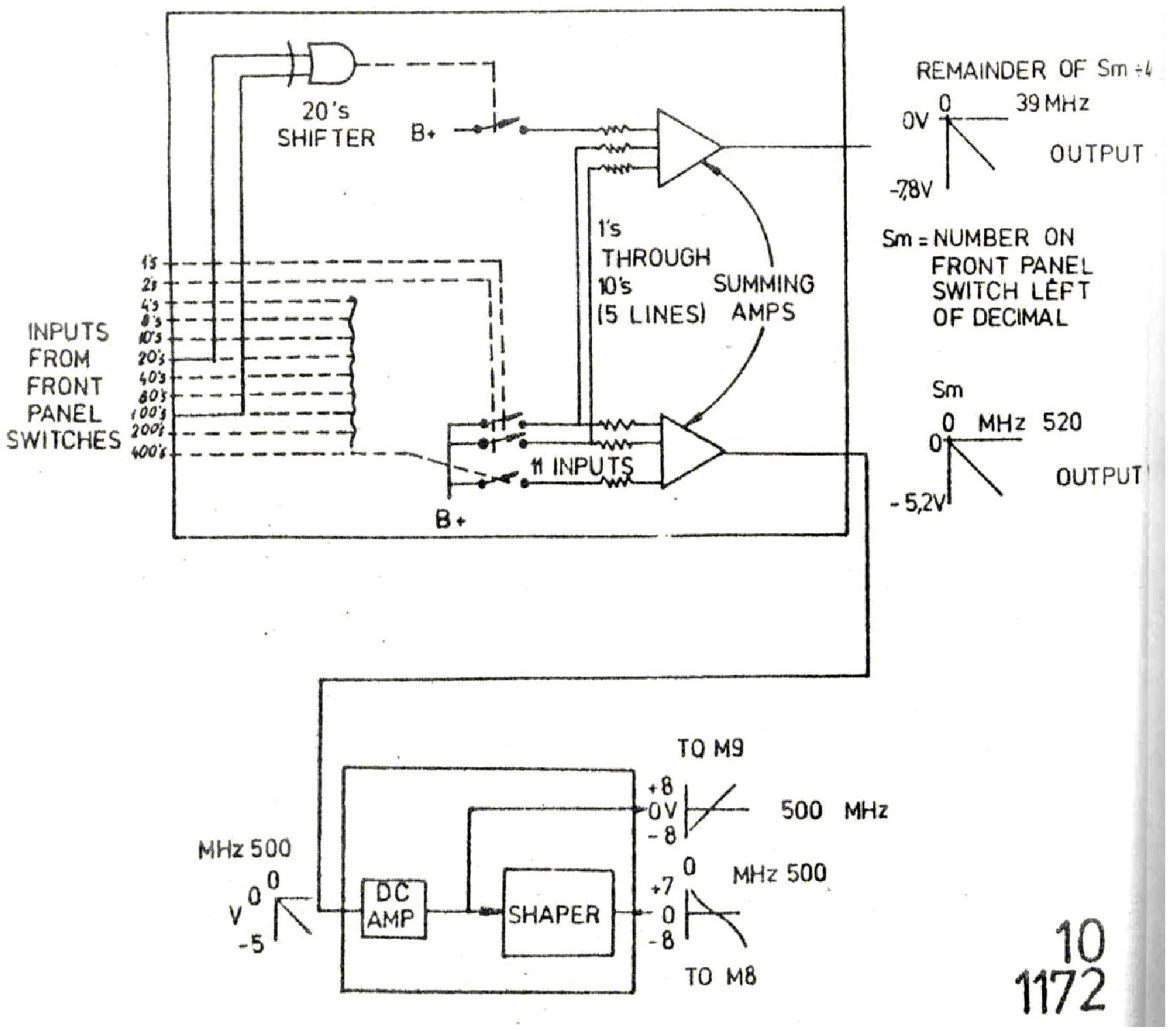
20's SHIFTER
B+
INPUTS FROM FRONT PANEL SWITCHES
1's THROUGH 10's (5 LINES)
SUMMING AMPS
11 INPUTS
B+
REMAINDER OF Sm ÷4
0V
0
39 MHz
OUTPUT
-7,8V
Sm = NUMBER ON FRONT PANEL SWITCH LEFT OF DECIMAL
Sm
0 MHz 520
0
OUTPUT
-5,2V
TO M9
+8
0V
-8
500 MHz
MHz 500
V
0
-5
DC AMP
SHAPER
+7
0
-8
MHz 500
TO M8
10
1172

Electric circuits necessary value transforms. The stepped down alternating voltage is transmitted after double-way rectifying and Siebung the row stabilizers.

4 .7.2. +18V power pack unit

The reference tension is produced with a breakdown diode stabilizer, which is fed with an auxiliary tension. The along transistor becomes ange of a IC automatic controller of high stability steers. The automatic controller is protected by a current limiter.

4.7.3. -18V power pack unit

With this unit it concerns likewise lining up - an automatic controller, which is equipped with over-current protection. As lieferen tension the stabilized tension of +18 V serves.

4.7.4. +7,3V power pack unit

This unit is actually a before automatic controller before the +5-V voltage regulators, which feed the logic ICs. Here case of even an over-current protection is present. As reference tension the stabilized tension of +18 V serves.

4.8. D/A converter and signal forming Rome circle M1

This electric circuit is steered via the MHz coding switches. It has two exits. To an exit appearing tension is proportional the frequency stopped with the coding switches (linear D/A exit).

The tension of the other exit is likewise proportional between 0 and 39 MHz of the tension stopped with the coding switches, but repeats themselves per 40 MHz. (Repetitiver D/A exit).

4.8.1. Linear D/A exit

The MHz coding switch present on the front plate have BCD exit. The MHz coding switches head for transistorierte circuits, those one summing up resistance the adjusted code a proportional river supply. If e.g. with the code 1 the river I is present, then with the codes 2, 4, 8 twice, four times, eight times so large river is transmitted to the summing up resistance. Therefore the tension the frequency value stopped appearing at the Summierer with MHz coding switches is proportional

. **4.8.2. Repetitiver D/A exit**

The function is similarly, however with the difference that the output voltage rises between 0-39 MHz linear, but starting from 40 MHz recently of 0 rises. This procedure is repeated, i.e. with 0, 40, 80… 480 MHz the rise of 0 begins, and the tension reaches its maximum value with 39 MHz and their multiples.

4.8.3. Signal forming circuit

This exit distorts the signal of the linear D/A exit for the broadband oscillator M8. The co-ordination tension output frequency - characteristic of the Varicap diodes - oscillator is not linear. The similar coming from MHz coding switches directly tension is proportional the frequency. The forming signal circuit has actually the task to adapt the MHz coding switches to the width connection oscillator co-ordinated with Varicap diodes.

4.8.4. DC amplifier

This amplifier strengthens the signal of the D/A exit and " shifts " it for in the power amplifier the M9 present " Trackingfilter".

4.9. Beat - oscillator M8

Of the unit M8 one receives the HF output frequency of the equipment. This frequency develops as frequency difference after the mixture of the signals of two oscillators with higher frequency the block diagram is contained in fig. 11.

4.9.1. Mixer

Of the narrow band oscillator arrives a signal with 1198 MHz frequency at the mixer (with exception of the FM mode of operation). The frequency of the signal of the broadband oscillator arriving likewise here changes between 1199 MHz and 1718 MHz. The frequency difference (1 - 520 MHz) is transmitted to the broadband preamplifier and then the power amplifier M9.

4.9.2. Broadband oscillator

This concerns a voltage-controlled oscillator (VCO) with Varicap diodes.

It has two co-ordination entrances. At the one entrance a similar co-ordination signal arrives of the forming signal circuit. During the vote of this entrance aua the frequency difference follows the value with approx., stopped with the MHz coding switches at the front plate. +1 spleen accuracy. To the exact value the frequency becomes of at other entrance the arriving DC tension adjusted. This tension arrives of the phase detector.

4.9.3. Narrow band oscillator

With this it acts likewise around one with a Varicap diode co-ordinated oscillator (VCO). The frequency can be co-ordinated with a tension

4.9.4. Level control circuit

In this unit three level regulation circuits are contained. Their task is to keep the signal level independent of the frequency and the temperature on constant level. The regulation is performed of an electric circuit with PIN diodes.

4.10. Output amplifier M9

The task of the amplifier is to strengthen the HF-signal coming from the unit M8 (1-520 MHz) on one between -7 and +13 dBm adjustable level. The level regulation circuits developed with PIN diodes ensures for it that the tension with the value in a broad frequency range, stopped resting against the exit, by the desired reference level, shines for against the rules function the light emitting diode present on the front plate UNLEVELLED. The block diagram is to be found in fig. 12.

4.10.1. Amplifier

This amplifier is with six transistors of developed broadband amplifiers. The reinforcement amounts to approx. 23 railways. For reduction of the harmonic waves a Trackingfilter at the exit of the amplifier, which is co-ordinated by the similar signal coming from M1, is. (The filter is effective in the frequency range lying over 250 MHz).

4.10.2. Level controller

The level controller consists difference of a point detector, an amplifier and a divisor with pin diodes. The point detector is fed by the HF-exit. The reference signal is led by to reference unit here.

4.10.3. Light emitting diode UNLEVELLED

If the error signal arriving from the exit of the sum-and-difference amplifier overrides the divisor with pin diodes, comes ös to signal distortions. These are indicated by the light emitting diode UNLEVELLED.

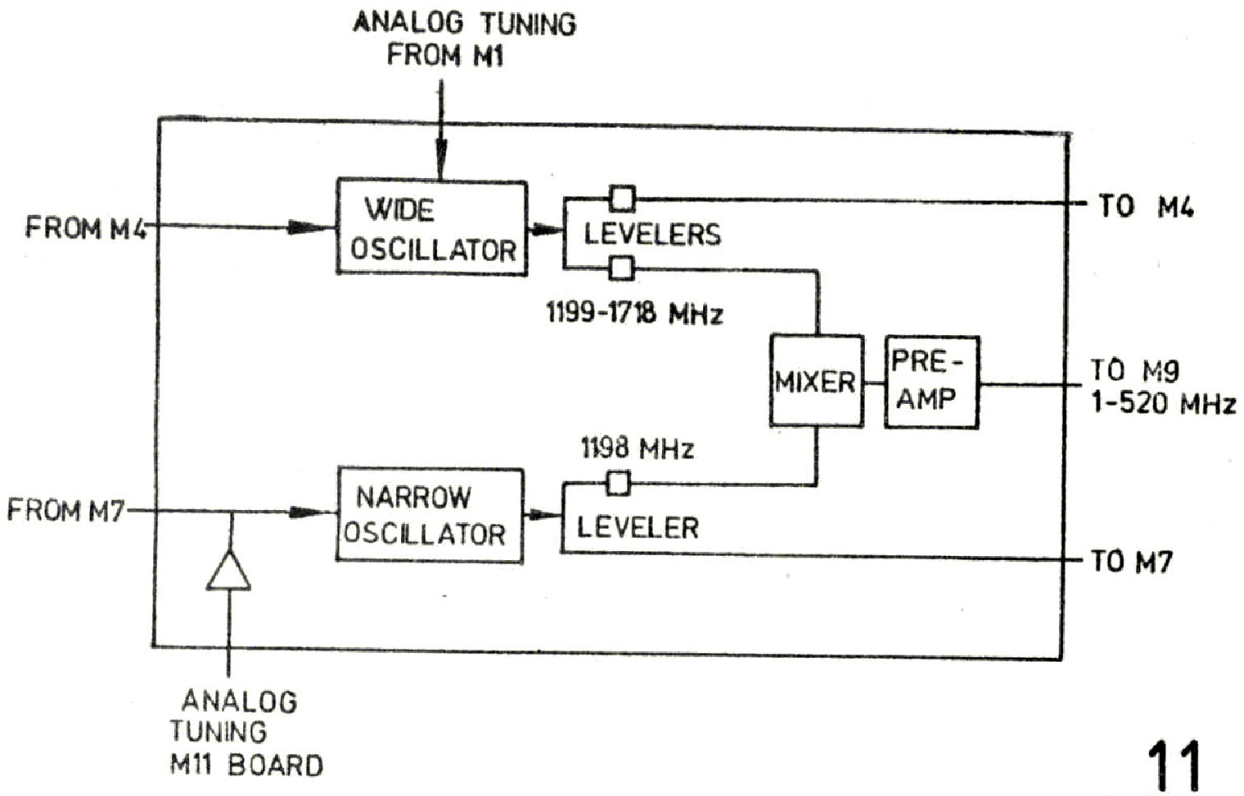

11
1172

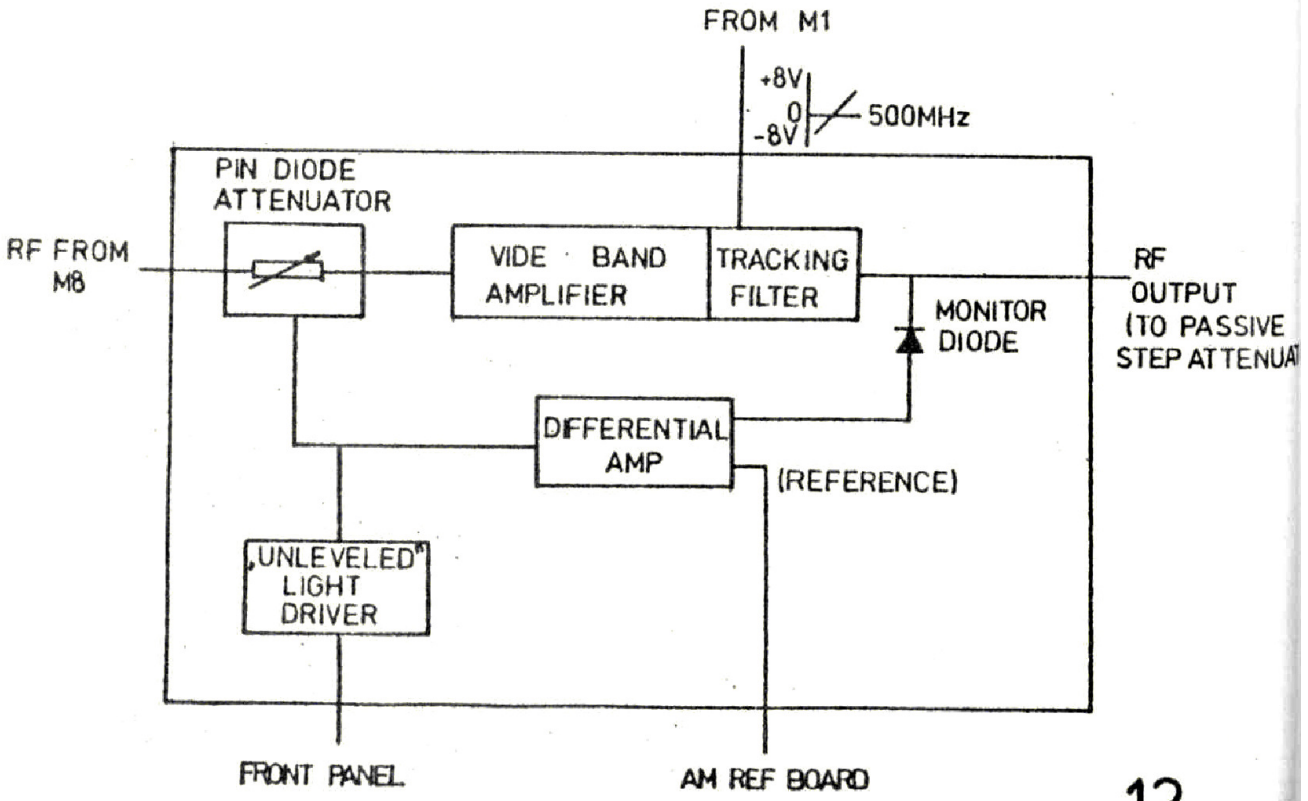

12
1172

4.11. FM reference unit M2

The unit M2 is a tension frequency converter of high linearity, whose output signal is used with the FM mode of operation in the PLL circuit PLL3 as reference signal. The frequency of the output signal of the unit amounts to with 0 V input voltage: 2 MHz. The block diagram is contained in fig. 13.

4.11.1. Current generator

The generator contains a negative and a positive current generator of high temperature and time stability as well as of high linearity.

4.11.2. Oscillator

The output signal is rectangular wave.
This signal is produced by an integrator and a Hysteresis switch. Of the positive river generator arriving river loads the integrating capacity. If the tension of the capacity tilts a certain positive level reached the Hysteresis switch and scolded the negative current generator to the loaded condenser on, which itself thereupon first unloads, then however in positive direction to load begins itself.
After a negative voltage level was reached, scolded the Hysteresis switch on the positive current generator over then repeats itself again the process periodically. The frequency of the developing periodic signal depends on the size of the river of the current generators. The river of the current generator is proportional the control voltage.
The frequency of the output signal depends thus on the size of the entrance expensive tension.

4.12. Crystal-controlled reference frequency unit M6 (fig. 14)

The task of the reference frequency unit is to produce the reference frequency for the PLL circuits. These frequencies are 1 kHz, 1 MHz, 2 MHz, 40 MHz and their harmonic waves as well as 1200 MHz and 1440 MHz. These signals are produced from the signal of a 50-MHz of basic oscillator by multiplication.

4.12.1. 40 MHz Oscillator

The stability of frequency and - the accuracy and the stability of the exit HF tension tune accuracy of this oscillator fuel element. The oscillator is temperature-compensated quartz oscillator of very high stability. It swings on the series resonant frequency of the quartz.

4.12.2. Frequency dividers

The lower frequencies are subdivided with the help of a frequency divider to the appropriate value. With the 1:20 - divisor is produced the output frequency by 2 MHz. By a further division of this frequency one receives the 1-MHz output signal and then the 1-kHz output signal.

4.12.3. Frequency multiplier

The combined 40 MHz signal exit (40 MHz and the harmonic waves) produced by the 40 MHz signal to the harmonic wave generator (frequency multiplier with step diodes) one puts. The filtered 120 MHz signal is strengthened and put to a further harmonic wave generator. From the harmonic waves from 120 MHz become by means of appropriate filters

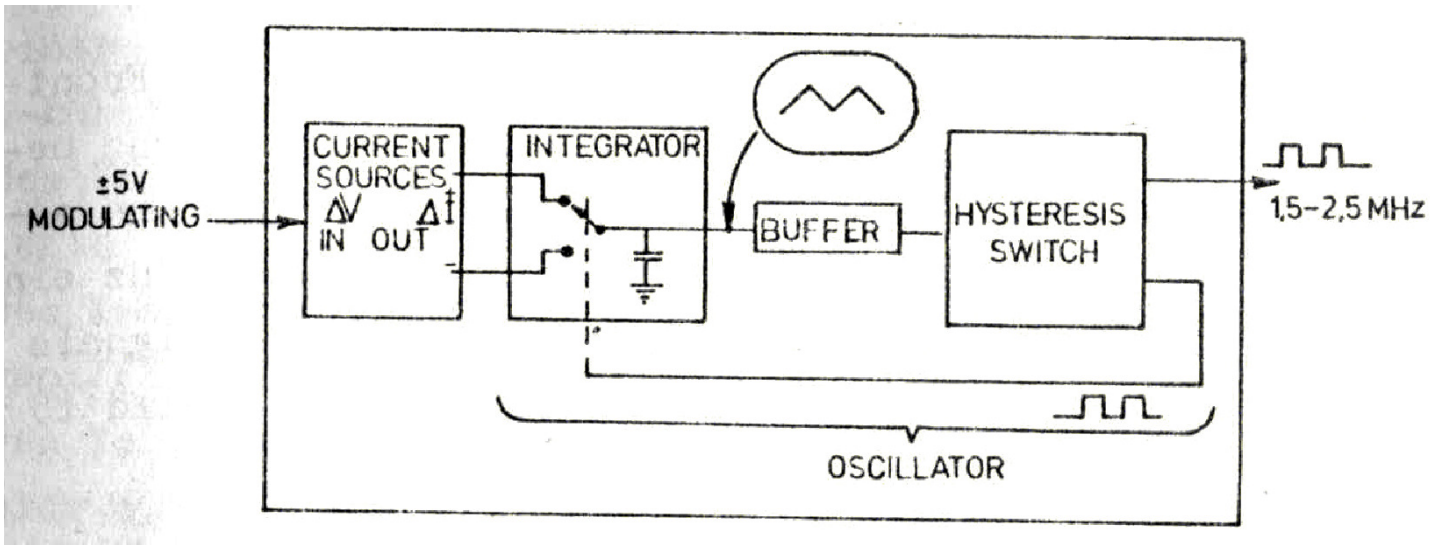
±5V
MODULATING
CURRENT
SOURCES
ΔV
IN
ΔI
OUT
INTEGRATOR
BUFFER
HYSTERESIS
SWITCH
1,5–2,5 MHz
OSCILLATOR

FIG.13

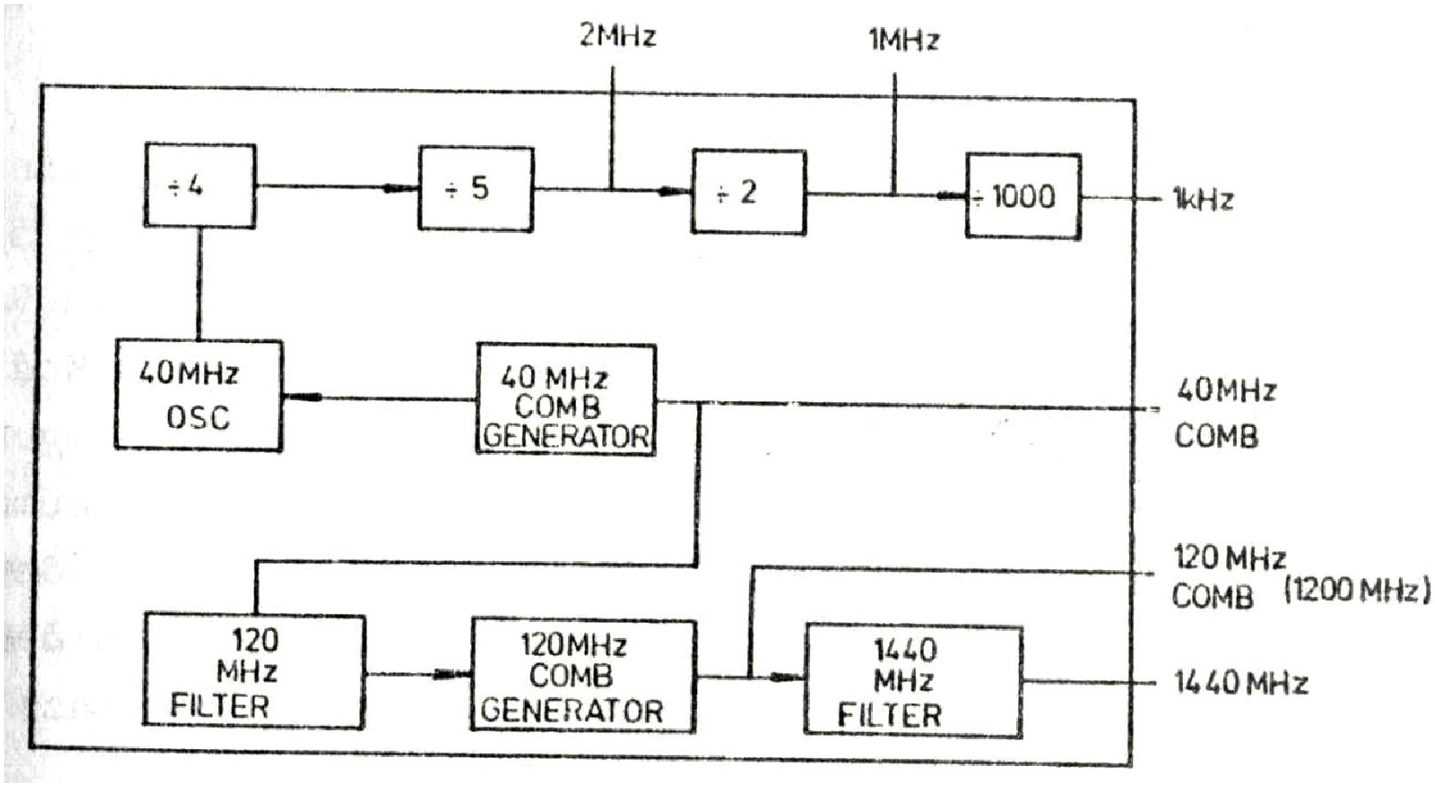
2MHz
1MHz
÷4
÷5
÷2
÷1000
1kHz
40MHz
OSC
40 MHz
COMB
GENERATOR
40MHz
COMB
120 MHz
COMB
(1200 MHz)
120
MHz
FILTER
120MHz
COMB
GENERATOR
1440
MHz
FILTER
1440 MHz

FIG. 14

the necessary 1200 MHz and 1440 MHz of signals selected.

4.13. 1-kHz step PLL circuit M3

The entrance is the BCD information arriving from the kHz coding switches at the front plate. The output frequency with carries 10MHz-**fk**, where **fk** is the number indicated by the kHz coding switches. If the frequency is thus stopped to 444.444 MHz, then the frequency of the output signal M3 amounts to 9.556 MHz. The block diagram of the unit is to be found in fig. 15.

4.13.1. VCO (voltage-controlled oscillator)

The output signal is inferred from a voltage-controlled oscillator. The approach vote of the oscillator is performed by the Auagangs DC signal of a D/A converter and the exact frequency is stopped by a PLL circuit.

4.13.2. D/A converter

The converter transforms the BCD information coming from the KHz coding switches into a similar tension. This tension stops the frequency with the help of the Varicap diode in the VCO to the desired value. The BCD information coming from the KHz coding switches scolded the current generators on to the summing up amplifiers. These amplifiers sum up the rated input voltages, therefore DC voltage the numerical value (frequency), adjusted which is because of from course of the amplifier, by the KHz coding switches, are proportional.

4.13.3. PLL circuit

The approximate vote of the VCO is accomplished in the way described in the point 4.13.1. The attitude on the exact frequency becomes by that, from which phase detector performs over a filter arriving signal. The unit M6 supplies the 1 KHz reference signal for the phase detector. The output signal of the VCO is supplied to the phase detector by way of a programmable divisor. When engaging the phase the frequency of the output signal of the divisor amounts to 1 Khz (it agrees with the reference frequency).
The maximum division of the programmable divisor amounts to 10,000. To this division it comes, if the KHz coding switches are in the position 000. Since the output frequency in each case agrees with the 1 KHz frequency, the frequency of the VCO in this case amounts to 10,000 kHz. If the KHz coding switches are not in the position 000, and e.g. the value **fk** is present, then amounts to worth the division 10 000-**fk**.
Since the VCO is co-ordinated in such a way by the PLL circuit that the output signal of the frequency divider amounts to 1 KHz, the frequency of the VCO becomes: 10 000-**fk** amount to.

4.14. MHz step PLL circuit M5

The unit M5 produces a reference frequency, which corresponds the value stopped on MHz to switches for M4.
The block diagram is contained in fig. 16.
The output frequency of M5 changes between 1448 MHz and 1487 MHz in 1 MHz steps and repeats themselves per 40 for MHz (position of MHz coding switches).
Therefore the output frequency can be noted by M5 as follows:

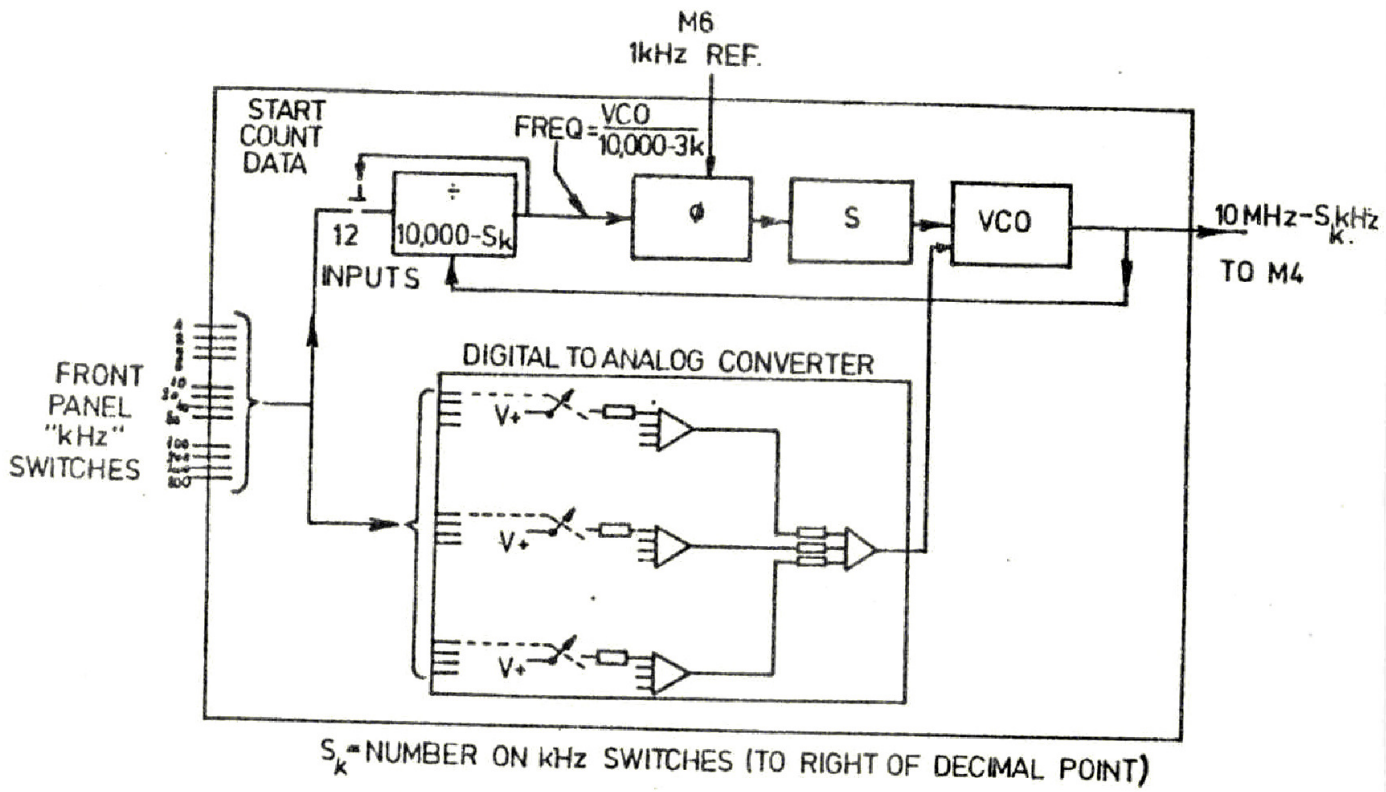
M6
1kHz REF.
START
COUNT
DATA
FREQ = VCO / 10,000-3k
÷
10,000-Sk
12
INPUTS
φ
S
VCO
10MHz-Sk kHz
TO M4
FRONT
PANEL
"kHz"
SWITCHES
DIGITAL TO ANALOG CONVERTER
V+
V+
V+
Sk = NUMBER ON kHz SWITCHES (TO RIGHT OF DECIMAL POINT)

FIG. 15

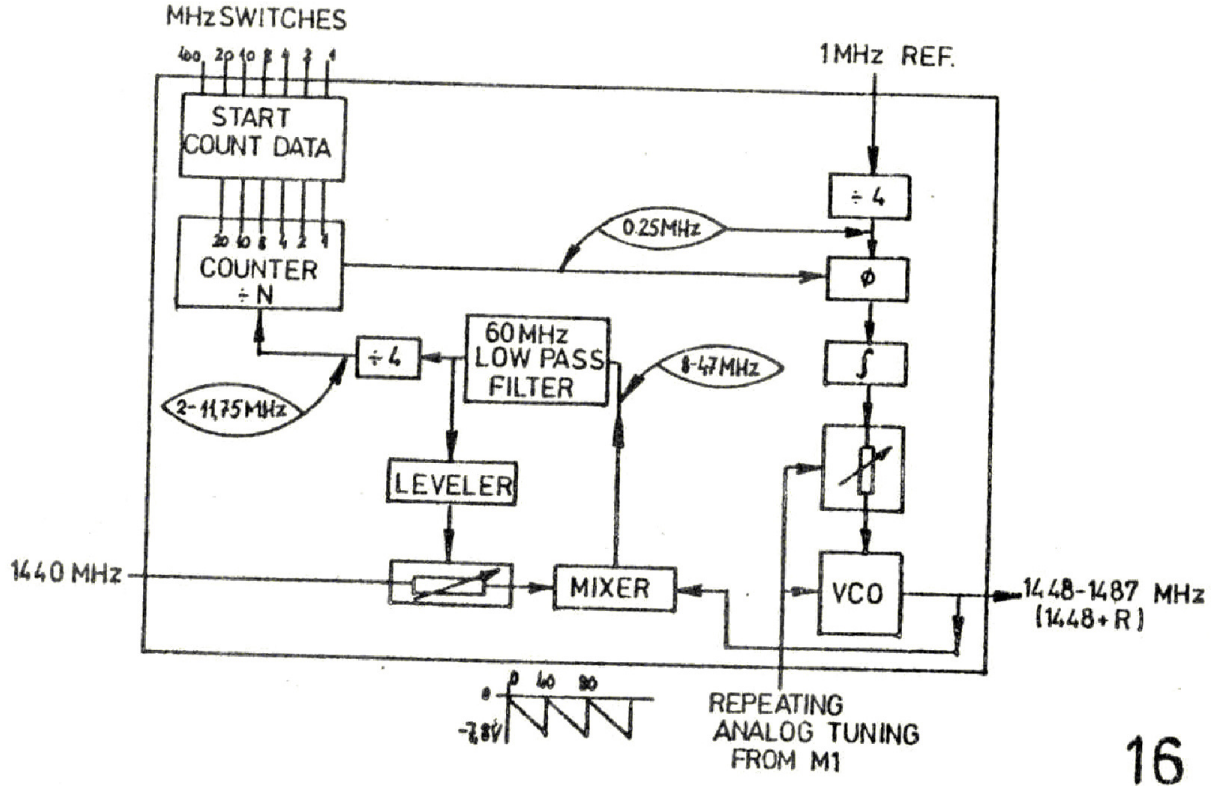
MHz SWITCHES
1MHz REF.
START
COUNT DATA
÷4
0.25MHz
COUNTER
÷N
φ
÷4
60MHz
LOW PASS
FILTER
8-47MHz
2-11.75MHz
LEVELER
1440 MHz
MIXER
VCO
1448-1487 MHz
(1448+R)
REPEATING
ANALOG TUNING
FROM M1

16

$\mathbf{f_5 = 1448\ MHz + f_R}$

where $\mathbf{f_R}$ the remainder of the integral quotient of the value stopped divided by 40 MHz with MHz switch is.
If e.g. MHz coding switches is in the position 380, then is :

$\mathbf{f_R = 330: 40 = 9 + 20/40 \qquad f_R = 20}$

and

$\mathbf{f_5 = 1448 + f_R = 1468\ MHz.}$

4.14.1. VCO (voltage-controlled oscillator)

The output frequency of the unit is produced of the VCO. The approximate vote is performed of from the unit the Ml coming, repetitive signal of the D/A exit. The attitude on the exact frequency is caused of the PLL circuit. In the PLL circuit also still another programmed frequency divider and a phase detector are contained except the VCO.

4 .14.2. Phase detector

The reference frequency of the phase detector amounts to 250 KHz. The output error signal detunes the frequency of the VCO in a direction that the signal frequency divided by the programmable divisor amounts to 250 KHz (i.e. with the reference frequency agrees).

4.14.3 Programmable frequency divider

Over from the frequency of the VCO (1448--1487 MHz) for the phase detector 250 kHz to produce, this frequency must be converted three times.

1. First it is mixed with the 1140 MHz signal and transformed into the range 8 - 47 MHz.

2. Then the frequency is divided by 4, so that it comes to lie in the number range likewise by 4 divided 1 MHz of the frequency. This 1:4 - divisor is actually needed, because in this case the programmable divisor from units can be developed of lower speed (thus cheaper units).

3. In the end the frequency becomes by one programs cash 1: **N** divisor led. The measure of the division (N) extends from 8 to 47. It cheats, depending upon the position of MHz coding switches $\mathbf{f}_M$ = 39 : 8 and with $\mathbf{f}_M$ = 00 : 47.

4.15. PLL circuit of the narrow band oscillator M7

The circuit performs an engaging of the phase in the unit M8 narrow band VCO present. It contains a mixer, a phase detector and a reference change over switch.

The block diagram is to be found in fig. 17.

4.15.1. Mixer

The phase detector works in UHF frequency range. Therefore its frequency becomes with the help of a 1200 MHz of signal up 2 MHz down transforms.

4 .15.2. Phase detector

This detector compares the reference frequency with on 2 MHz of transformed signal of the VCO.

4.15.3. Reference change over switch

In the modes of operation CW and AM a 2 MHz Reference frequency is put by quartz accuracy and in the mode of operation FM the FM reference signal coming from the unit M2 to the phase detector.

These two reference frequencies are switched electronically by the change over switch.

4.16. PLL circuit of the broadband oscillator M4

The block diagram is to be found in fig. 18.

The designations in the block diagram agree with the designations of the describing schematic in fig. 19.

The mixers contained in the unit have the task to add from individual units coming UHF frequencies one stable frequency each so that these are made suitable for a comparison with the reference frequency in the phase detector.

The unit contains a phase detector and auxiliary circuits except the mixers.

4.16.1. Phase detector

As reference frequency from the unit the signal its frequency within the range 10 000 – 9001 kHz, coming, serves M3 lies. This reference frequency is compared with the transformed signal of the broadband VCO.

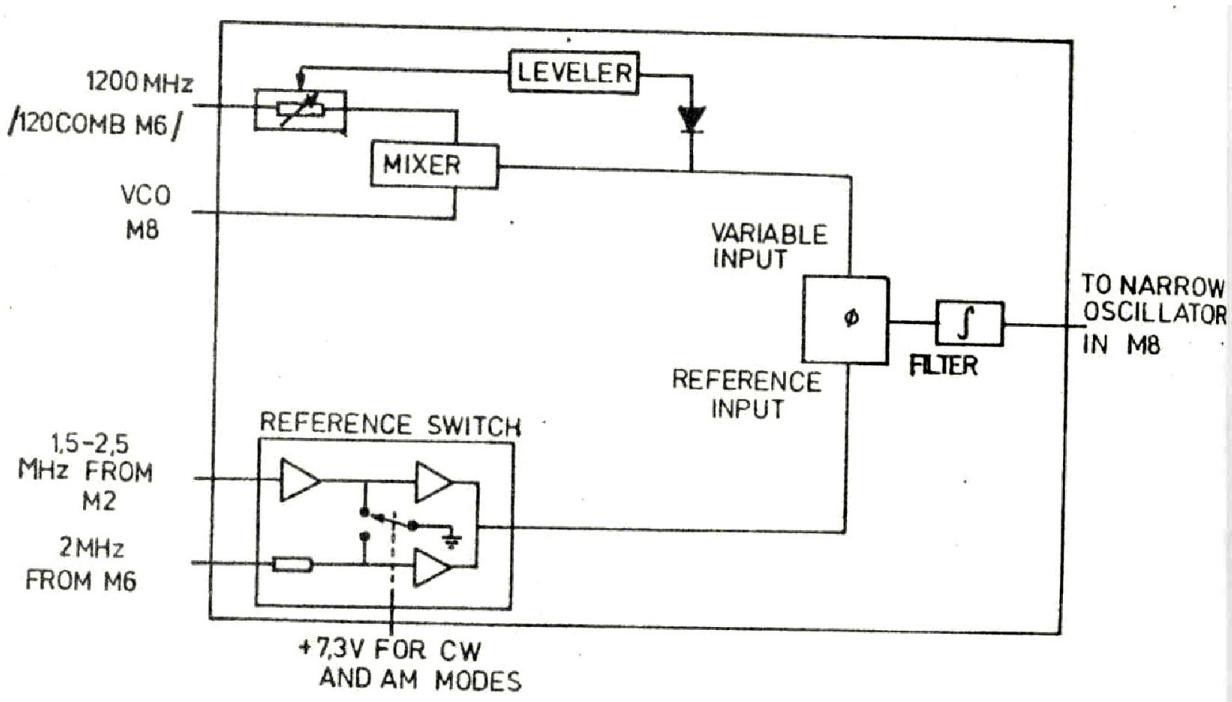

FIG.17

4.16.2. Mix electric circuit

The signal of the VCO must be converted into a frequency, which lies in the function frequency range of the phase detector. This transformation is performed by the MIXER 1, a 270 MHz lowpass filter, MIXER 2 and 10 MHz lowpass filter.

MIXER 1 mixes the signal of the broadband oscillator with the signal coming from the unit M5 (1448 + $\mathbf{f}_R$ MHz). The frequency difference (1448 + $\mathbf{f}_R$ -VCO MHz) is below 270 MHz. This signal is put at MIXER 2, where it is mixed with the 40 MHz signal combination (10 MHz and their harmonic waves).

In fig. 19 only that combination frequency (of the harmonic waves of 40 MHz) is aforementioned in the line D, which holds the output signal of the mixers on a word under 20 MHz. With the phase produce MIXERS 2 a frequency difference of 10 MHz (f 3, line E in fig. 19) rest. The condition for it is that kHz coding switches is in the position 000.

Fig. 20 shows the change of the frequencies if the kHz coding switches not in the position 000 is. If the automatic control loop did not engage in phase, that extends pass band of the low-pass filter to 20 MHz. As soon as engaging took place, scolded yourself the range of the filter electronically on 10 MHz over (in this way the noise of the PLL-s lets itself decrease).

4.16.3 Auxiliary circuits

The acceleration electric circuit is effective if the automatic control loop did not engage in phase. With its assistance the response times are decreased. The exit of the electric circuit is put to the entrance of the accelerator, where from a field-effect transistor of ordering switches the time constant (from a R-C Circuit existing) of the filter for the duration that set to be approximately 1 / 100 reduced.

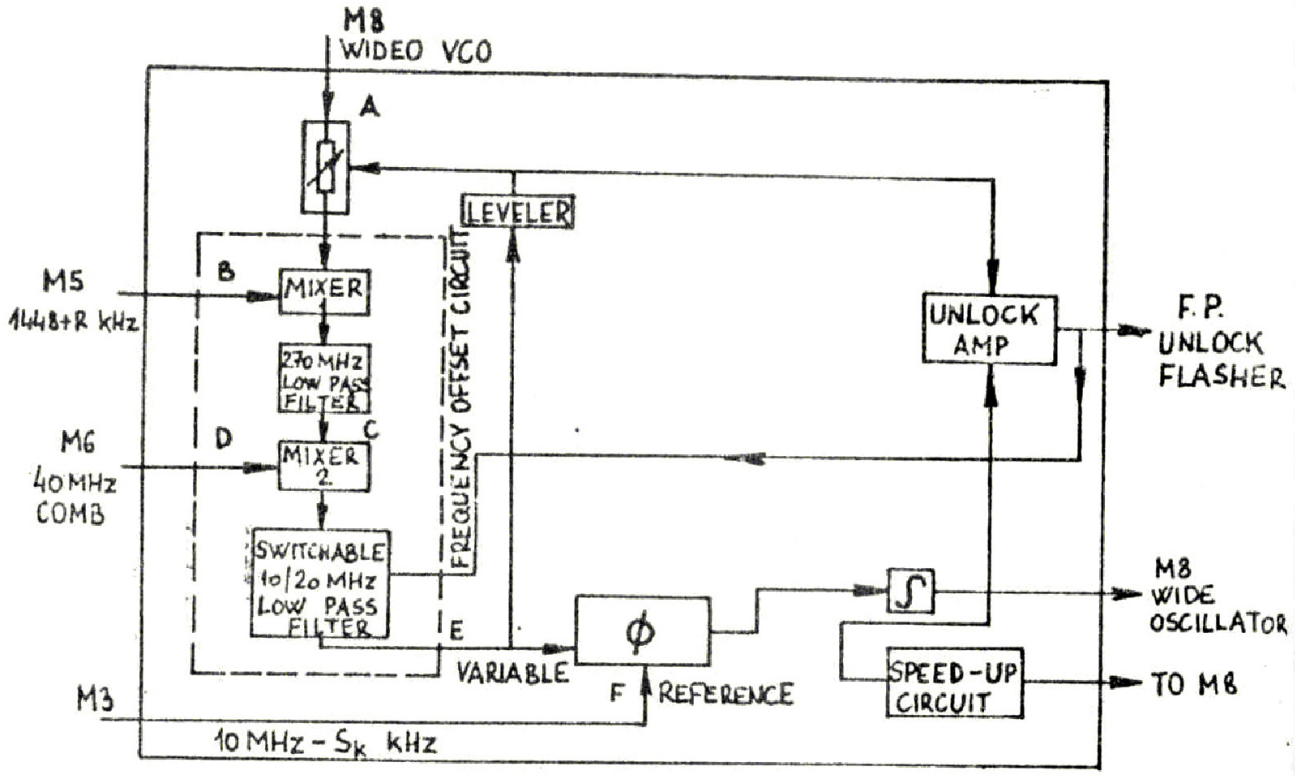
M8
WIDEO VCO
A
LEVELER
M5
1448+R kHz
B
MIXER
270 MHz LOW PASS FILTER
M6
40 MHz COMB
D
C
MIXER 2
SWITCHABLE 10/20 MHz LOW PASS FILTER
FREQUENCY OFFSET CIRCUIT
E
VARIABLE
F
REFERENCE
M3
10 MHz - S_K kHz
UNLOCK AMP
F.P. UNLOCK FLASHER
M8 WIDE OSCILLATOR
SPEED-UP CIRCUIT
TO M8

FIG. 18

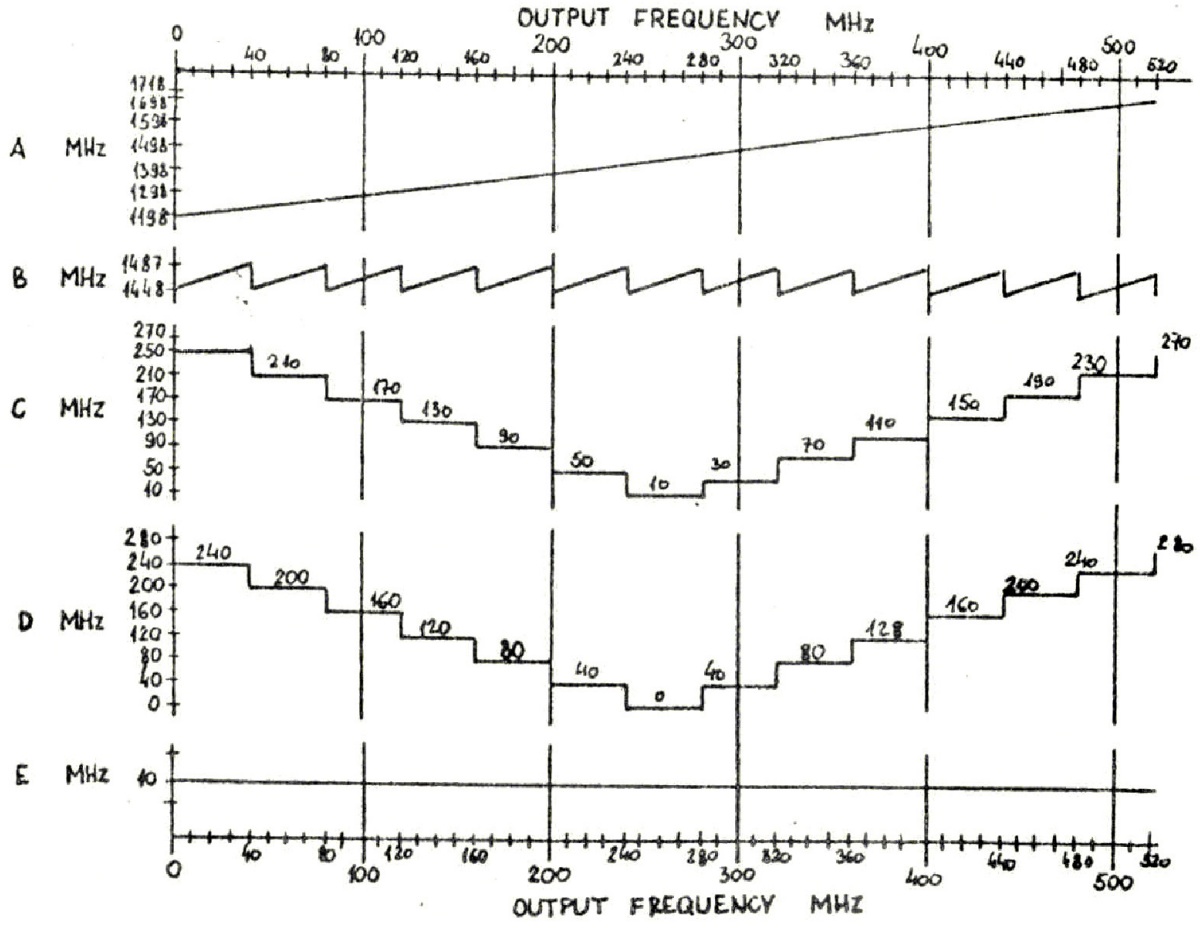
OUTPUT FREQUENCY MHz
A MHz
B MHz
C MHz
D MHz
E MHz
OUTPUT FREQUENCY MHz

FIG. 19

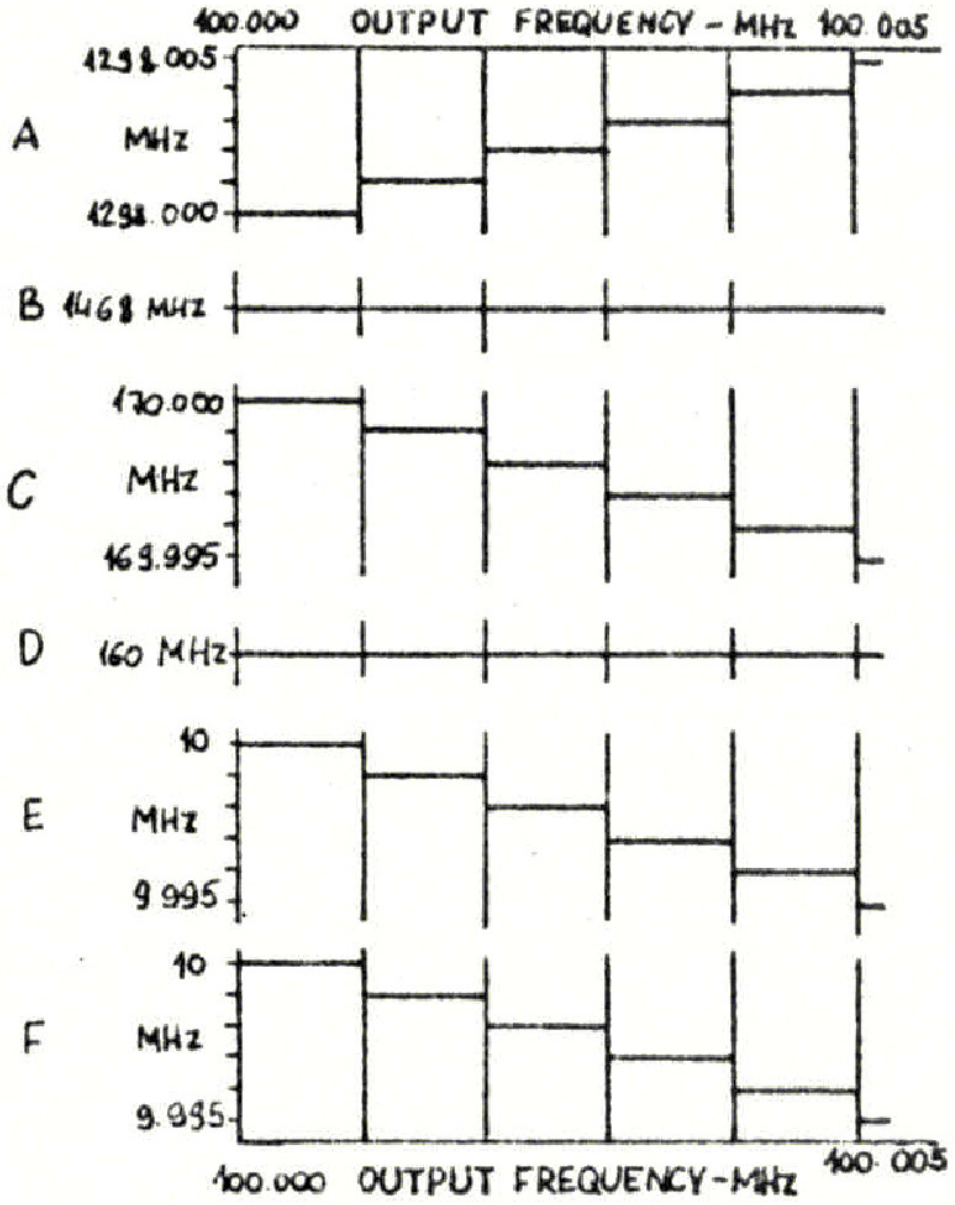
400.000 OUTPUT FREQUENCY - MHz 400.005
A
MHz
B 1468 MHz
C
MHz
169.995
D 160 MHz
E
MHz
9.995
F
MHz
9.995
400.000 OUTPUT FREQUENCY - MHz 400.005

FIG. 20

4.16.4. UNLOCK Amplifier

To its input signals reach the level control amplifier and the phase detector. Should any of the aforementioned units are working properly, then the flasher circuit is activated. The level control circuit keeps the amplitude of the arriving at the phase detector signal by controlling the level of the signal coming from the VCO constant. The signal of the catches on the input of the phase detector spigot lecturer is compared with a reference DC.
The error signal controls an operational amplifier has a control with PIN diodes.

4.17. RF Attenuator M16

With this divider can be the output RF level to share in the range 0-120 dB in 10 dB steps. It consists of 10 -, 20 -, 30 - and 60-dB- π - steps. The on and off the - members is performed by two micro-switches. The switches are actuated by electromagnets. The circuit has the required voltage a nominal value of 24 V.
The divider can be programmed with the help of electronic auxiliary circuits.

4.18. Mechanical Design

The massive frame of the device consists of two side plates produced by injection molding, from this unifying front and backing plate as well as the main printed circuit board.
The front plate and the operating organs arranged to it are in fig. 21 and 33 represented.
If two fixing bolts each are turned off, the cover plate and the base plate can be pulled out to the rear.
All units of the equipment are fastened on the main plate. The units M10, M11 and M15 are implemented and 96 a poligen socket attached as plug-in cards. They can be pulled out upward.

The units M1 to M9 are accommodated in one screening hood each. These units are put and with in each case two screws fastened into at the main printed circuit board the female connectors present. The HF connection is manufactured over the SMC plug present at the top side of the units by means of 50-Ohm cable. The units are lifted out on the following way: fixing the RF cable using the included wrench (9150002841) address, remove cable the two at the lower part of the unit (at the lower side of the main printed circuit board) M4 present fixing bolts unscrew and the unit pull a respecting out carefully upward that the contact pins are not bent.
With the installation one proceeds in the reverse order.
The repetitive connection on the top side of the units HF cables present is represented in fig. 27. This picture is to be found also on the inside of the cover plate of the equipment. In this picture also the calibration organs are shown.

5. GENERAL OPERATING INSTRUCTIONS

5.1. Unpacking and packing

The award-packaged device is housed in a corrugated cardboard carton, which is open along with the gluing.After removing the device from the box, the sealed plastic package and then remove the inner paper packaging.

After unpacking the unit can be put into operation. Should the unit come again to transport, so it is to prevent possible damage during transport, pack, using all original packaging material as possible so as it was originally packaged.

5.2. The device may be operated only by one, provided with protective earthing system.

It is important to ensure that the vents are not obstructed during the operation.

6. SAFETY MEASURE - FEED

With the enterprise of the equipment no special safety precautions need to be met. The conversion of the equipment to another mains voltage and possible replacing of the protection can be performed at the back of the equipment without difficulty.

Before however the power supply plug must be pulled from the plug socket.

A melted protection may be replaced only by a protection, which exhibits the amperage noted on the backing plate. The equipment may be attached only one protective contact socket.

The equipment is to be attached with the help of the mains cable provided the net. If another mains cable is used, then this must be with a ground wire a provided, thus a three-core line. The mains cable is to be attached first the equipment and only then the net. With the separation of the equipment from the net the line is to be drawn against it first from the plug socket.

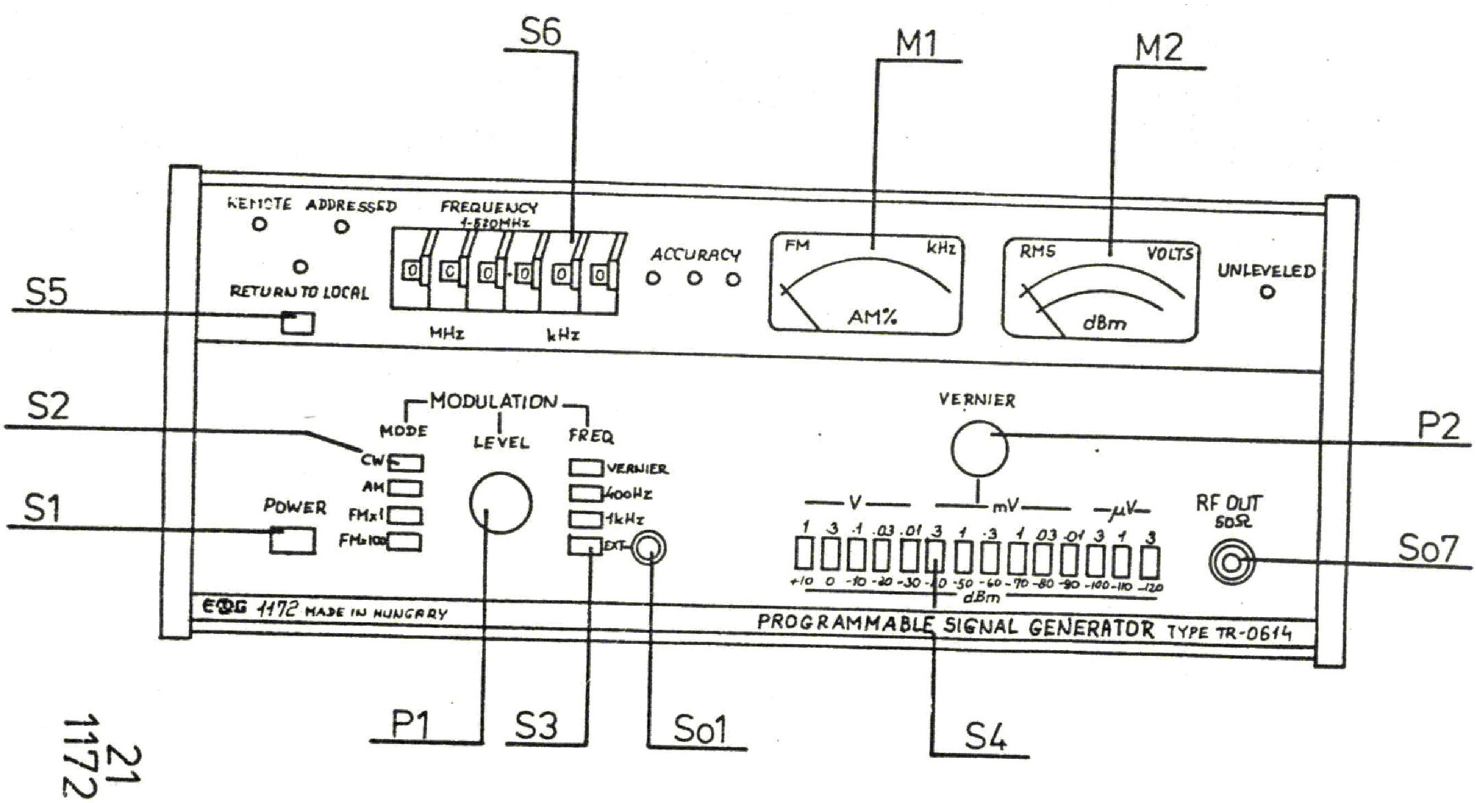

7. PREPARATION FOR THE THE START-UP

7.1. Control units and connector

7.1.1. Front panel of the unit

All the control units of the device are arranged on the front panel. The front panel is shown in Figure 21 and 33.

1. FREQUENCY (S6) code switch, to adjust
the desired frequency values from 1 to 520 MHz with a resolution of 1 kHz

2. ACCURACY
(D15, D14, D13)
Light emitting diodes to display the frequency accuracy. The frequency accuracy is not the same in any mode of operation:
CW and AM modes +0.001%
FM xl +0.001% + 10 kHz
Mode FM xl00 +0.001% + 45 kHz
After insertion of the device, the LED flashes for a few seconds. In normal operation, the corresponding LED lights up continuously. The constant blinking is a sign that one or more of the work inside the unit four PLL circuit-ments irregular.
The PLL circuit not engaging in phase can be easily identified after decrease of the cover plate of the equipment. Each unit is contained in the one PLL circuit possesses a light emitting diode, which begins to shine during a malfunction..

3. Modulation meter (M1)
The stroke from 0 to 5 kHz and the AM calibrated by 0 to 100%, With depressed, the switch series VERNIER MODULATION FREQ.) (S3, even a change of level of +6 dB and a frequency change of +5 kHz to +500 kHz read. These values belong to the end position (MAX.) of the potentiometer MODULATION LEVEL (P1).
4. MODULATION LEVEL potentiometer (P1)
Adjusts the modulation of de meter in displayed values
5. Output level meter (M2)
Displays the output level in a 10-dB range.
6. VERNIER potentiometer (P2)
Used for continuous control of the output level at 10dB range
7. Indicator diode UNleveled (D12)
The light emitting diode (D12) serves shines for the constant regulation of the output level within the 10dB range, if the output level accuracy is not valid.
If it shines, is either the modulation factor or the exit HF level to be decreased.
8. Attenuator (S4)
Push buttons for adjusting the output level between +10dBm and -120dBm.The inscription of the push buttons mean dBm and V.
9. MODULATION FREQ EXT (So1)
Input of the external modulation signal with 600 Ohm input impedance of the signal required amounts to 10Vvv.
Output when an internal 400Hz respectively. 1kHz modulation. The divided voltage (5 Vvv) of the internal LF generator is brought out for synchronization purposes here.
10. Modulation frequency pushbutton (FREQ) (S3)
Selects the modulation signal: 400 Hz, 1 kHz, VERNIER (DC voltage) or external signal source.
11. Mode switch (32) (MODE)
By pressing the corresponding button of one of the following modes can be selected: CW. AM, FMx1 and FMx100.
12. RF output connector (RF OUT) (37)
N female, at the RF output signal can be removed.
13. POWER ON-OFF (S1)
Pushbutton switch to turn on the device.
14. REMOTE (D17)
Indicator LED, which lights when the remote control.
(She starts to shine when the control units) are switched off at the front panel
15. Adressed (D19)
Indicator LED. She lights up during the addressing of the interface unit. If it is lit is the RF splitter to maximum attenuation.
16. RETURN TO LOCAL (D18).
Indicator LED. If it shines, the push button RETURN TO LOCAL is ineffective.

17. RETURN TO LOCAL (S5)
The key is to shift the mode of operation the mode REMOTE / LOCAL.
7.1.2. Control units on the rear panel of the device
(Figure 22 and 34)
1.Voltage selector (S7)
With his help, the Geauf the given supply voltage (110, 127 or 220) can be set.
2.Fuses (F1)
For 110 and 127 V: T 1.6 A for 220 V contact: T 800 mA
3.Jack
Power jack with protective
4. EXT CONTROL (SO2)
This leads to remote control is also connected to the IEC-matching unit.
5. Grounding Contact
Grounding connector with screw.

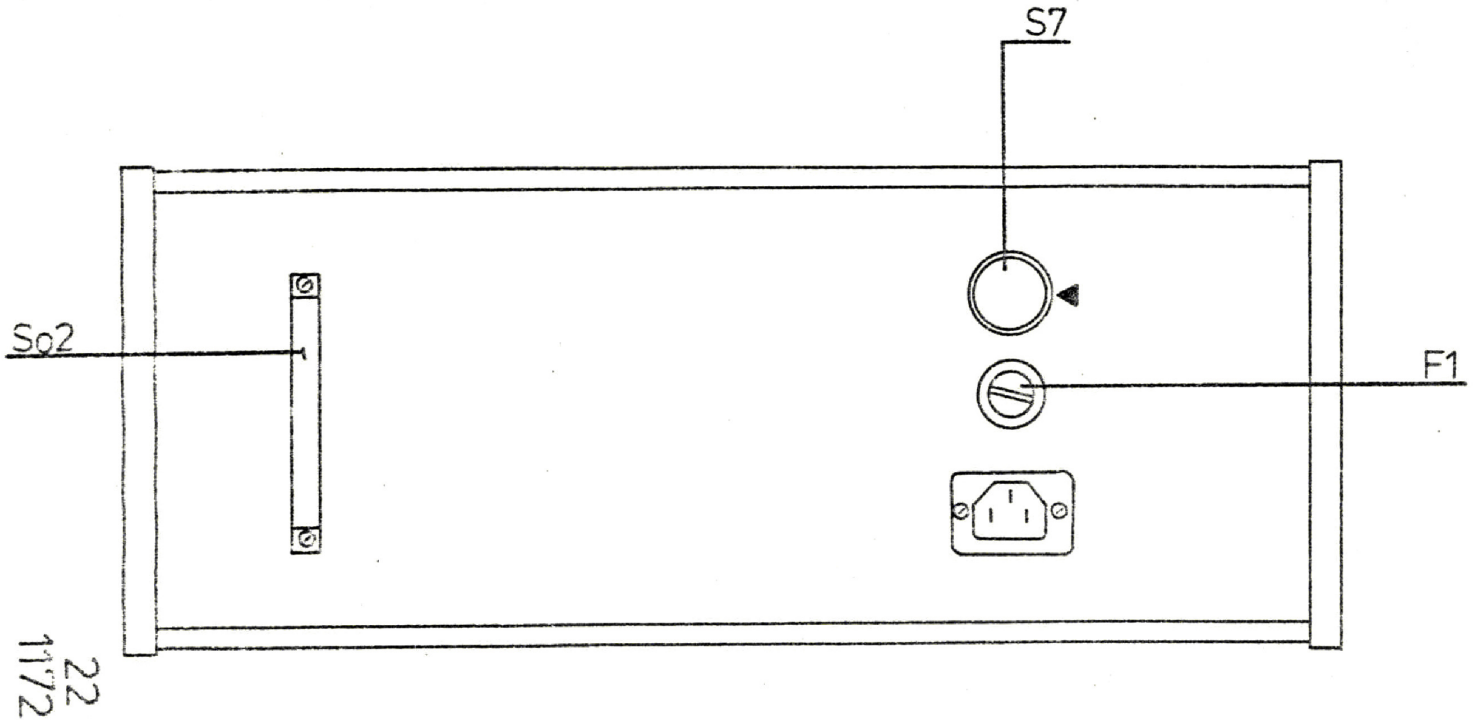

8. CEBRAUCHSVORSCHRIFTEN

8.1 Commissioning

Before the engagement of the equipment it is to be examined whether see the mains voltage voter in the correct position rules. The equipment is adjusted in the work before the delivery to 220 V mains voltage. Changing over to 110 V and/or 127 V takes place through Voltage Selector. selector. In the case of such a conversion at the backing plate would find-borrow protection is FUSE through those as accessories provided protection from 1,6 A to replace. During the start-up of the equipment it is to be made certain that on the top side and/or at the lower surface of the housing ventilation openings present are not covered, since it comes otherwise to a over heating up of the equipment. The equipment adjusted to the correct mains voltage value is attached with the help of the mains cable the net and switched on then with the switch S1. After the engagement 1 or 2 from the light emitting diodes will shine to the announcement of the frequency accuracy. (Depending upon the position mode selector)

8.1.1. Examine the operating ability (approx. 5 minutes after that Engagement) The function of the equipment set in accordance with the point 8.1 in enterprise is examined for the following way.

The switches at the front plate are to be brought into the following positions:

Output frequency (FREQUENCY S6): 10,000 kHz
Mode of operation push button (MODE S2): CW
Modulating frequency (FREQ 3): 1 kHz Potentiometer
MODULATION LEVEL (P1): left attack
Output divisor (S4): +10 dBm

The output is connected via a 50 ohm through termination of an RF oscilloscope (20-30 MHz).

8.1.1.1. Check the RF output

The need on the screen of the oscilloscope phenomenon occur in de 10-MHz signal has an amplitude of 2.8 Vpp have.

8.1.1.2. Check the amplitude modulation (1000 Hz)

Pushbutton / AM (mode) (S2) button, and adjust the potentiometer MODULATION LEVEL (P1), a 50% amplitude modulation. On the screen must be able to see the modulation. (The ratio of maximum to minimum signal amplitude is 3:1). The image on the screen of the oscilloscope can easily be stopped if an external synchronization used and the synchronized signal from the BNC connector MODULATION FREQ EXT (So1) of the generator is derived. Check bo, the period of the modulation signal is 1 ms (Fig. 23).

8.1.1.3. Check the amplitude modulation (400 Hz)

Button press 400 Hz (S3). The period of the envelope must be 2.5 ms.

8.1.1.4. Testing FMx1

FMx1 button press (S2). MODULATION LEVEL potentiometer (P1) between the two end positions rotate and check whether the signal is observed on an oscilloscope in the frequency modulation. (If you can see on the oscilloscope from 8 to 10 full periods, then appears at the end stop the stroke indicator, the signal on the oscilloscope screen somewhat blurred)

8.1.1.5. Testing FMx100

The above-described examination after pressing the button FMx100 (repeat S2).

8.1.1.6. Testing of FM VERNIER

While pressing the mode switch set FMxl00 (MODE 32) the Button VERNIER (FREQ S3). Check that the frequency increase when turning the potentiometer MODULATION LEVEL (P1) clockwise (in the maximum position of the Potentiometers must. Pointer of the modulation display in instrument scale deflection (5 kHz) are located.)

8.1.1.7. Testing of AM VERNIER

Pushbutton PM (S2 MODE button). MODULATION LEVEL knob of the potentiometer (P1) in the left-final position. (Now, the pointer indicating instrument of the modulation (M1) to 0) as long as potentiometer slowly clockwise until the hand half of the full eruption (50% AM) is reached. . Check that the amplitude of the output RF signal to the oscilloscope. (During this review, the UNLEVELLED LED (D12) to shine because the output level exceeds 1 Vrms).

8.1.1.8. Check the divider

CW Button (MODE S2) button. Check by turning the potentiometer VERNIER (P2), and by then pressing the buttons of the divider-whether to change the output level leaves. This is the operational capability has been tested and the device is in a state of operational readiness.

8.1.2. Operation of the device

The device is capable of the technical data only after a warming period meet for 2 hours.

8.1.2.1. Turn on

Verify that the position of the voltage and the current value of the securities of the given voltage. Then the network is already connected to the device are turned on by Drükken the power button ON / OFF (S1).

From the front panel and located the accuracy indicating LEDs be (depending on the selected mode) one or two light up.

Note: If the LEDs blink, then this is a sign that one of the PLL circuit does not lock doors. The flashing stops at an operational unit within a few seconds. If the device is used to perform measurements to be achieved in which not all values need, it can be immediately used.

Please note! If the device is used for measurements in active circuits which may be transmitted to the generator output voltage does not reach because they can cause damage to the output divider.

8.1.2.2. Frequency adjustment
The desired frequency can be set using the front panel to the on-six code switches in the range 1 to 520 MHz with 1 kHz resolution (FREQUENCY S6).

8.1.2.3. Setting the output RF level
The output level is adjusted with the potentiometer VERNIER (P2) and with the help of the buttons in the main divider in the range +12 dBm ... -127 dBm terminated.
Note: The amplitude modulation is also possible at an output level of about +3 dBm, which is not exceeded the peak of the output RF signal, the level of +13 dBm. The excess of this level of the wild UNLEVELLED LED (DL2) is displayed.

3.1.2.4. Internal Amplitude Modulation
While pressing the PM of the mode selector switch (MODE S2), the modulation frequency of 400 Hz or 1 kHz (according to the position of the pressed key) be.
The modulation depth can be adjusted with the potentiometer MODULATION LEVEL (P1), and can be read on the instrument Ml. The modulation signal can be taken) with an internal modulation of the bush MODULATION FREQ EXT (So1)

8.1.2.5. External Amplitude Modulation
To the jack MODULATION FREQ EXT (Sol) may one voltage of ±10 V DC or 10 Vrms be used because otherwise the risk of damage to the device.
After pressing the AM of the operating mode (MODE S2)
and the EXT button of the switch MODULATION FREQ (S3) to the
EXT input voltage to a basket of 10 Vpp (The value of the input resistance is 600 ohms).
The desired degree of modulation can with the MODULATION LEVEL potentiometer (P1) and leave on the modulation meter M1 in the frequency range 20 Hz - 20 kHz can be read.
In amplitude modulation is to ensure that the tip of the output level exceeds the level of +13dBm, because otherwise a distorted signal (in this case, the LED lights UNLEVELLED (D12)).
In some cases, the LED lights UNLEVELLED (D12) also with a too large degree of modulation, when the level setting dial VERNIER (P2) in the minimum position is. This is caused by complete blockage of the PIN-diode-level controller.
In this case, the output divider to turn another 10 dB attenuation and the desired level in the maximum position of VERNIER (P2) set.
8.1.2.6. Internal frequency modulation
When pressed FMx1 or FMxl00 of the operating mode (MODE S2), the modulation frequency of 400 Hz or 1 kHz to be (according to the position of the pressed key). The stroke can be adjusted with the potentiometer MODULATION LEVEL (P1) and the size of the instrument M1 can be read.
8.1.2.7. External frequency modulation
The connector to the MODULATION FREQ EXT (So1) which can be applied maximum Voltage is ±10 V DC or 10 Vpp. After pressing the button

FMx1 or FMx100 of the operating mode (MODE S2) and the EXT button of the switch MODULATION FREQ (S3) is set to EXT to input a voltage of 10 Vpp (The input impedance is 600 ohms).
The desired stroke can with the MODULATION LEVEL potentiometer (P1) and leave on the instrument M1 in the frequency range 20 Hz - 25 kHz can be read.

8.1.2.8. Position FM VERNIER

When you press the switch button VERNIER series MODULATION FREQ (S3), one can tune with the button pressed FMx1 or FMx100 the mode switch set the source FM frequency with the potentiometer MODULATION LEVEL (P1) in the positive direction by 5 or 500 kHz. The size of the depression can be read on the instrument M1.

8.1.2.9. Position AM - VERNIER

When you press the button, the switch series VERNIER MODULATION FREQ (S3) can be increased while holding the key of the AM mode switch set the output RF level with the potentiometer MODULATION LEVEL (PI). Under this method, you can adjust the output level at each frequency over 20 mW (as long as the LED UNLEVELLED (D12) is not lit).

8.1.2.10. Programming

In the REMOTE mode, the following parameters must be programmed:

Frequency:	in between 1 MHz and 500 MHz, 1 kHz steps
Output RF splitter	0 to -129 dB in 1 dB steps
Modes	CW - AM - FMx1 - FMx100

Programming is done via the connector (SO2) on the rear panel.
The programmed by the local operating institutions can laid on the point of the left socket C19 SO2 logic level "1" (or be blocked by shunting to ground) (negative logic!)

8.1.2.10.1. Programming the frequency

The frequency can be controlled with negative 8-4-2-1-BCD logic.
The contact distribution is shown in Figure 24.

8.1.2.10.2. Programming the operating modes

The modes are programmed by negative BNC logic on two lines (A, B).

		A	B
CW	0	0	0
AM	1	1	0
FMxl	2	0	1
FMxl00	3	1	1

The contact distribution is shown in Figure 24.

8.1.2.10.3. 1-dB steps to the main divider

BNC with negative logic. Recovery in the contact picture 24

8.1.2.10.4. 10-dB steps to the main divider

Binary code with negative logic. The contact distribution in Figure 2

In the operation mode REMOTE held on the front panel setting member of the programmable parameters are ineffective. The set by programming parameters get on the front panel is not displayed. The left connector (So2), this can be connected as an option "C" available IEC interface. From the water bar jack is also the food supply of the interface..

8.2. Calibration

8.2.1. Removing the device

After taking off the ground and the top plate, and the two front side panel assemblies, all - required for recruitment and measurement - measurement points or setting member access. The measurements and settings can be more convenient and easier to perform when the device is placed on the right side. In this position the device) can all settings and measurements are made with a single exception (the calibration of the modulation degree.

8.2.2. Expansion of the units (modules)

Cable on top of each separate unit (to release the compound are two wrench included). After loosening the two mounting screws on the bottom of the unit, this is compounded by a lateral movement

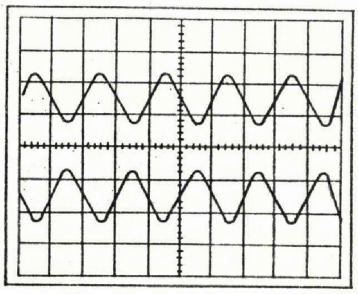

FIG.23

a1 - ADDRESSED LED
2 - RETURN TO LOCAL LED
3 - +5 V /INTERFACE/
4 - REMOTE LED
5 - RETURN TO LOCAL S5
6 - RETURN TO LOCAL S5
7 - UNLOCK TP
8 - +8 V
9 - NC
1o - NC
11 - -8 V
12 - NC
13 - -27V
14 - -18 V
15 - NC
16 - +27 V
17 - +18 V
18 - NC
19 - +11 V
2o - +7,3 V
21 - NC
22 - 4oo MHz
23 - 2oo
24 - 1oo
25 - 8o
26 - 4o
27 - 2o
28 - 1o
29 - 8
3o - 4
31 - 2
a32 - 1 MHz

o1 - MODE A
2 - MODE B
3 - ATT - 1 dB
4 - - 2
5 - - 4
6 - - 8
7 - -1o
8 - -2o
9 - -4o
1o - -8o dB
11 - NC
12 - NC
13 - +5 V /GENERATOR/
14 NC
15 - NC
16 - GND /GENERATOR/
17 - NC
18 - NC
19 - REMOTE/LOCAL
2o - NC
21 - 8oo kHz
22 - 4oo
23 - 2oo
24 - 1oo
25 - 8o
26 - 4o
27 - 2o
28 - 1o
29 - 8
3o - 4
31 - 2
o32 - 1 kHz

FIG.24

8.2.4.5. Check the auxiliary power supply
Digital voltmeter connect the supply line C3. The measured value shall be 10 V ±0.5 V.
8.2.4.6. Precise adjustment of the control oscillator (Quarzosc)
output RF OUT (SO7) by 1172 to connect to the input of the frequency payer (M5). In 1172 make the following settings:

FREQUENCY (S6)	50,.000 MHz
MODE (S6)	CW
MODULATION FREQ (S3)	EXT
Level meter (M2)	+3 dBm
Output divider (S4)	+10 dBm

Trimmer Capacitor (C610) of M6 (Fig. 26) with a screwdriver (ø 2 mm) in that direction, turn that the readable frequency counter to the frequency value is 50.000 MHz.
8.2.4.7. Setting the PLL circuit No. 1 (PLL1)
The arrangement of the setting member of the unit M3 is shown in Figure 27.
Frequency (S6) of 1172 set to 200.000 MHz.
The other switch should be left in the previous period (8.2.4.6) different positions.
The oscilloscope to the connector 9 of the connector to connect the unit M3 (sensitivity of the oscilloscope: DC 1V/cm).
The potentiometer P302 to the oscilloscope deflection is a set of +1 V. Afterward, the frequency of 200,999 MHz and the deflection on the screen of the oscilloscope with the P301 potentiometer again to +1 V set.

8.2.4.8. Setting the PLL circuit No. 2 (PLL2) (M5 unit)
The measuring points of M5 are shown in Figure 26 and the required setting member in Figure 27.
a) Suppose the frequency to 200,000 MHz and leave the other switches in the positions mentioned in point 8.2.4.6.
Digital voltmeter to the terminal 13 of the socket connector to connect the unit M5. By tuning the Trimmer capacitors (C654 and C656) of the unit is set on the M6 digital voltmeter, a voltage minimum. This voltage must be between 0.7V and 1.7V.
b) frequency 239,000 MHz. The reading on the digital voltmeter voltage value must be between the above-mentioned limits.
c) Set the frequency 200,000 MHz again. The oscilloscope to the connector 14 of unit M5 join. Adjust the potentiometer P502 to the oscilloscope a deflection of 0 V.
d) frequency of 239,000 MHz and adjust a deflection from 0 to set the oscilloscope time with the potentiometer P503.
8.2.4.9. Setting the PLL circuit No. 3 (PLL3)
The circuit PLL3 contains two units, i.e. M7 and M8. The necessary institutions are in recruiting in the unit and the M8 Control measuring point located on the unit version of the M7 (below).
a) oscilloscope (DC 1 V / cm) the connection 7 connect the unit M7. Adjust the potentiometer P805 (unit M8) on the screen of the oscilloscope a deflection of 0 V.

b) Make in 1172 the following settings:

MODE (32)	FMxl00
MODULATION FREQ (S3)	1 kHz
MODULATION LEVEL	5 kHz

Oscilloscope (AC, 50 mV / cm) to connect the terminal unit 7 of the M7 with the potentiometer P806 to adapt to the screen of the oscilloscope minimal deflection. Modulation frequency of 400 Hz set and consider if this was not here to be measured at 1 kHz the minimum set value.

8.2.4.10. Setting the PLL circuit 4 (PLL4)

The calibration of PLL4 done by the recruitment and testing of three units (M1, M8, and M4). The measuring points are located on the units M1 and M4 and the setting member to the units M1 and M8 (images 27, 25).

a) frequency 250,000 MHz to adjust and bring the rest of the peeling in the positions specified in point 8.2.4.6. Digital voltmeter to the connector 16 of the M1 unit, and set the potentiometer P109 0.00 V.

b) output RF OUT (So7) of the 1172 connect frequency meter, connect oscilloscope (DC 1 V / cm) to the connection unit 14 of the M4. With the P801 potentiometer (on the top of the unit M8) on the deflection of an oscilloscope 0 V set. The frequency counter should now show 250 MHz. Note: The PLL locks on the M4 from a harmonic of 40 MHz. One can P801 0 V to the potentiometer so that the measuring frequency is 250 MHz instead of 250 MHz ± n40 MHz (n = 1, 2, 3) be. In this case, with the vote by P801 continue until the output frequency is in the recruitment of 0 V (on the connection 14 of M4) 250,000 MHz

c) switch FREQUENCY (S6) on 300,000 MHz set and adjust with the potentiometer P118 on the oscilloscope a deflection of 0 V. Now it must show the frequency counter 300,000 MHz.

d) This adjustment is repeated at 350 MHz with P114, with P115 at 400 MHz and 450 MHz with P116.

e) Switch FREQUENCY (set S6) to 500 MHz. Adjust the potentiometer P117 V 0. Frequency to 520 MHz increase and observe the deflection of the electron beam on the oscilloscope. By setting P117 to make a correction that the maximum displacements are symmetrical about the zero line.

The settings at 450 MHz, 500 MHz and 520 MHz to repeat again, because the adjustment potentiometer will affect each other a little.

f) Continue with the settings carried out so far at 100 MHz with P113, with P112 at 50 MHz and 0 MHz with P111. Since these potentiometers affect each other, the setting is carried out repeatedly.

g) digital voltmeter to the connector 5 to connect the unit M4 and frequency rate of 1 MHz to 520 MHz in 10 MHz steps. The reading is the maximum voltage can be adjusted by the potentiometer P802 to +1.5 V.

8.2.4.11. Modulation sources, adjusting the modulation meter (M10 and M11 units)

The setting member are shown in Figure 27. 1172 to make the following settings:

FREQUENCY (S6)	50,000 MHz
MODE (S2)	AM
MODULATION FREQ (S3)	VERNIER
Output divider (S4)	0 dBm
MODULATION FREQ (S3)	VERNIER
Output divider (S4)	0 dBm

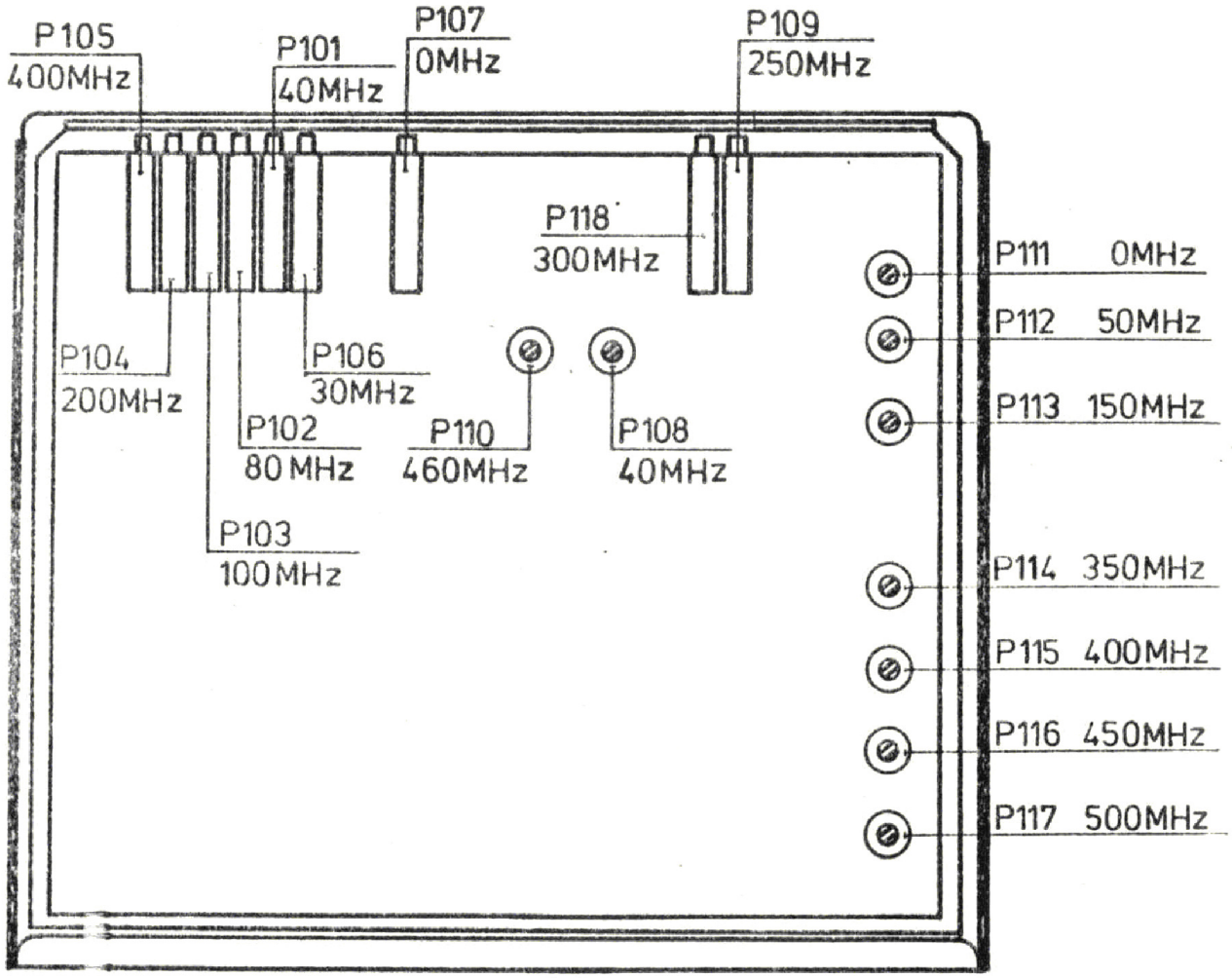
P105
400MHz
P101
40MHz
P107
0MHz
P109
250MHz
P118
300MHz
P111 0MHz
P112 50MHz
P113 150MHz
P104
200MHz
P106
30MHz
P102
80 MHz
P110
460MHz
P108
40MHz
P103
100MHz
P114 350MHz
P115 400MHz
P116 450MHz
P117 500MHz

25
1172

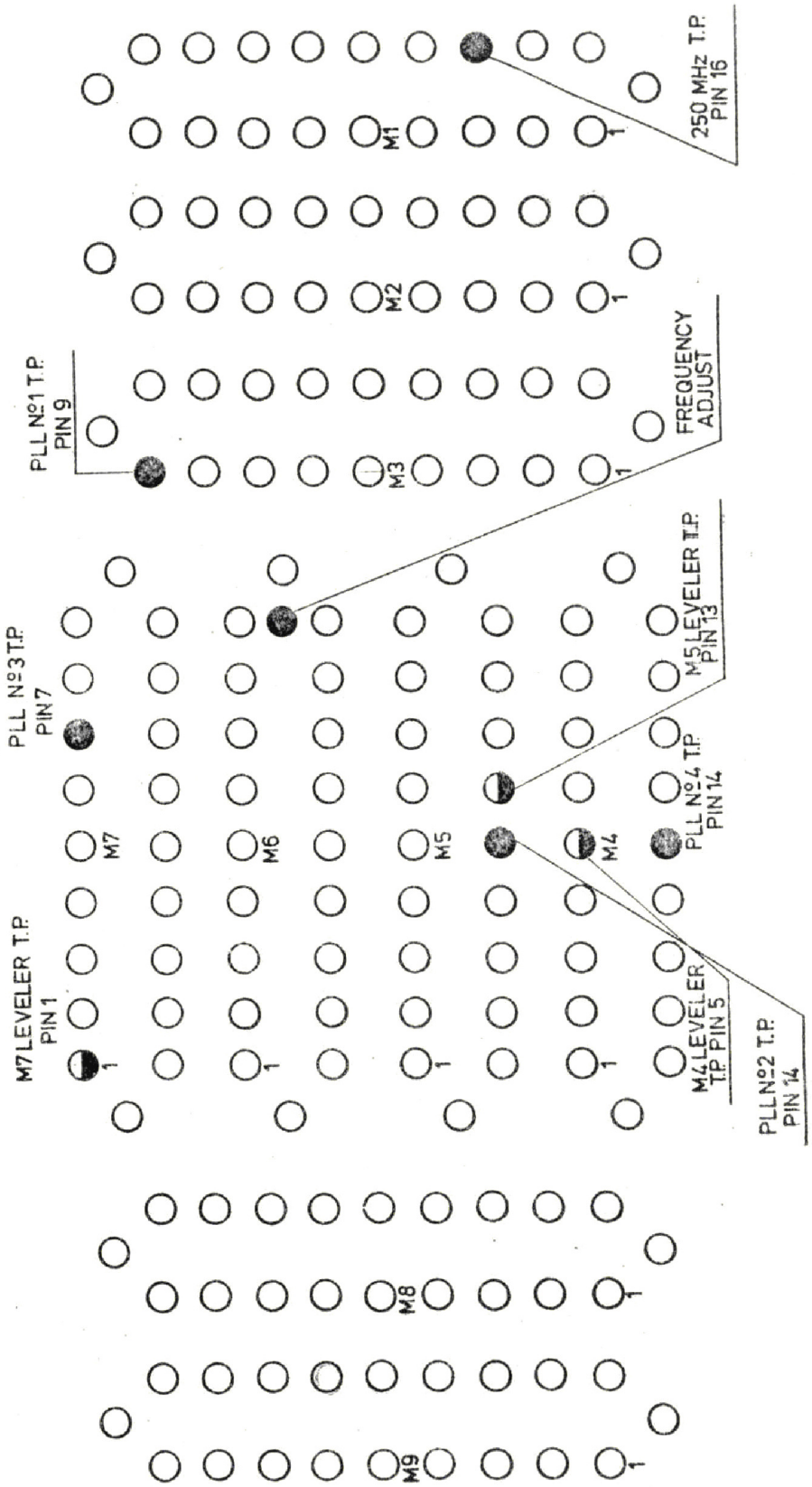
M7 LEVELER T.P.
PIN 1
PLL Nº3 T.P.
PIN 7
PLL Nº1 T.P.
PIN 9
M7
M6
M5
M4
M3
M2
M1
M8
M9
M4 LEVELER
T.P. PIN 5
PLL Nº4 T.P.
PIN 14
M5 LEVELER T.P.
PIN 13
FREQUENCY
ADJUST
250 MHz T.P.
PIN 16
PLL Nº2 T.P.
PIN 14

26
1172

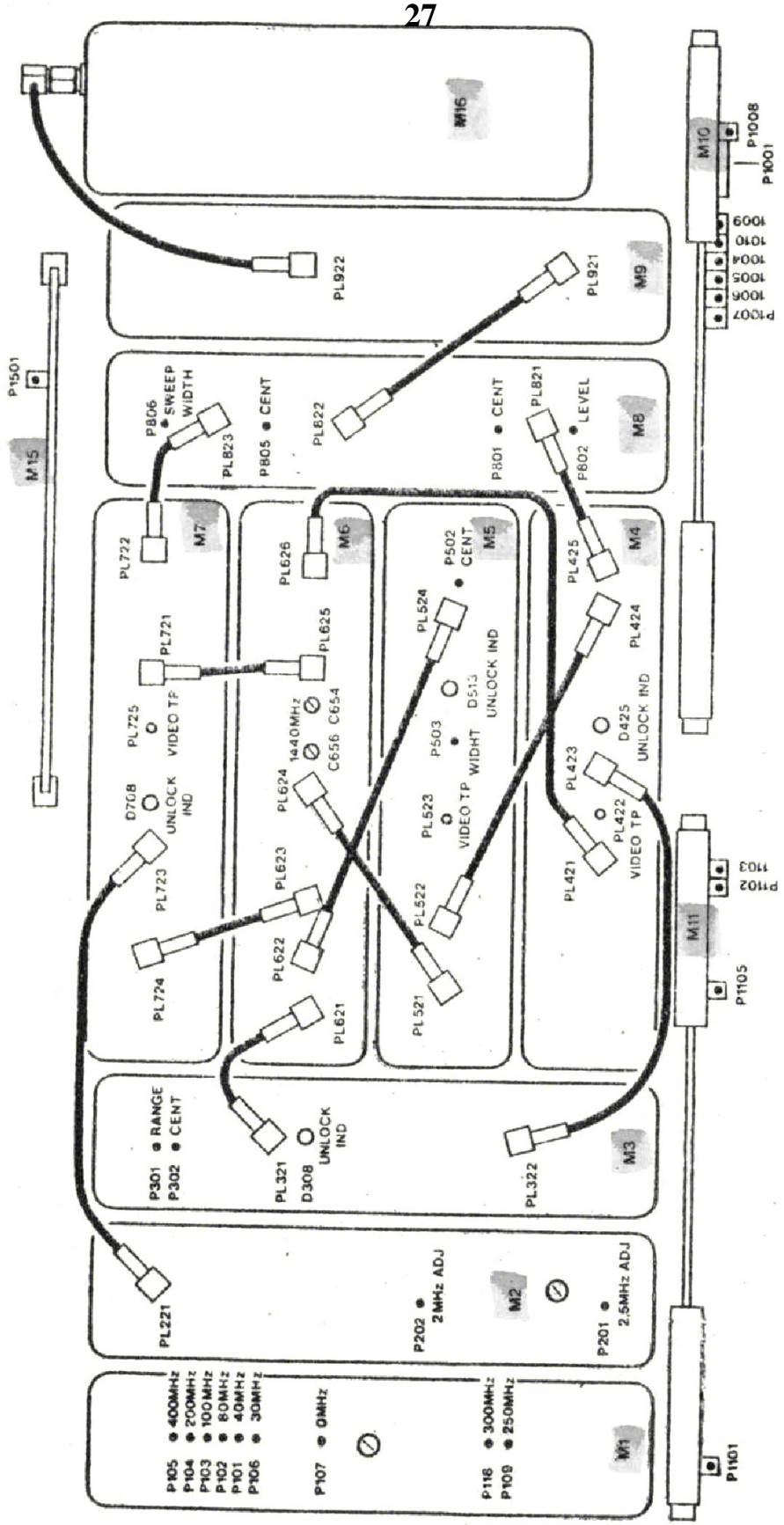
M16
M15
M10
M9
M8
M7
M6
M5
M4
M11
M3
M2
M1
P1501
P1008
P1001
P1009
P1010
P1004
P1005
P1006
P1007
PL922
PL921
P806 SWEEP WIDTH
PL823
P805 CENT
PL822
P801 CENT
PL821
P802 LEVEL
PL722
PL626
P502 CENT
PL524
PL425
PL721
PL625
PL725 VIDEO TP
1440MHz
C656 C654
D513 UNLOCK IND
P503 WIDHT
PL424
D425 UNLOCK IND
D708 UNLOCK IND
PL624
PL523 VIDEO TP
PL423
PL422 VIDEO TP
PL723
PL623
PL522
PL421
PL724
PL622
PL521
PL621
P1102
P1103
P1105
P301 RANGE
P302 CENT
PL321
D308 UNLOCK IND
PL322
PL221
P202 2MHz ADJ
P201 2.5MHz ADJ
P105 400MHz
P104 200MHz
P103 100MHz
P102 60MHz
P101 40MHz
P106 30MHz
P107 0MHz
P116 300MHz
P109 250MHz
P1101

FIG. 27

a) MODULATION LEVEL potentiometer (P1) clockwise in the final position.
On the modulation meter to the potentiometer P1103 set the scale reading.

b) Digital Voltmeter (AC 10 V) of the socket MODULATION FREQ EXT (So1) Connect (BNC). Modulation frequency to 1 kHz. In the maximum position of the potentiometer MODULATION LEVEL (P1) to the digital voltmeter with the potentiometer P1102 value of 1.77 Vef (Set 5 Vpp).
Then with the potentiometer on the P1008 Modulation display instrument M-1 of the full scale adjust.

8.2.4.12. Adjust the RF level meter

At 1172 the following settings are made:

FREQUENCY (S6)	50.000 MHz
MODE (S2)	CW
MODULATION FREQ (S3)	EXT
Output divider (S4)	0 dBm

a) VERNIER potentiometer (P2) in the left-final position. Pointer of the potentiometer Level measuring instrument M2
P1009 bring to zero (the pointer is to halve the mechanical zero of the corresponding black dot).

VERNIER potentiometer (P2) in the right end position. Pointer of the instrument (M2) with the potentiometer set P1010 to the division +3 dBm.

b) then calibrated power meter over a 10-dB attenuator to the output RF OUT (SO7) of 1172 Divider output to +10 dB, and power meter to +3 dBm set. Adjust the potentiometer on the P1004 power meter 2 mW. Level meter set to -7 dBm. The potentiometer on the power meter P1005 0.2 mW setting.

The settings with P1004 and P1005 are repeated alternately several times until the power meter in the positions +3 dBm and -7 dBm of the instrument 2 mW and 0.2 mW indicating

c) Output divisor of 1172 (S4) in the 0 dBm . bring Between 1172 and the power meter, the 10-dB attenuator insert member. Measuring head of the power meter directly to the RF output (SO7) connect the generator 1172 Pointer of the level meter in the status +3 dBm bring. Adjust the potentiometer on the P1007 power meter 2 mW. Level meter set to -7 dBm. Adjust the potentiometer on the P1006 power meter a rash of 0.2 mW.
The settings with P1006 and P1007 are repeated alternately several times until the power meter in the positions +3 dBm and -7 dBm Level meter 2 mW and 0.2 mW displays.

8.2.4.13. Setting the FM reference unit
At 1172 the following settings are made:

FREQUENCY (S6)	40.000 MHz
MODE (S2)	CW
MODULATION FREQ (S3)	VERNIER
Level meter (M2)	+3 dBm
Output divider (S4)	+10 dBm

Output RF OUT (SO7) of 1172 combined with the frequency meter.
a) Displayed frequency value and remember key FMx1 the mode switch (S2) in the minimum position of the potentiometer MODULATION LEVEL (P1, left end position press).
Adjust by turning the P202 potentiometer on the frequency counter a value that exceeds the previous value read by about 100 Hz. b) Press the key bank FMx100 MODE (press S2) and the MODULATION LEVEL potentiometer (P1) on the instrument M1 a rash of 5 kHz (full scale adjust).
Adjust the potentiometer on the meter measured frequency from 40.500 MHz ±10 kHz.
FMx1 the switch MODE button (S2) and adjust the displayed frequency by the frequency meter P1005 with the potentiometer to a value that exceed in point a) value read kHz by 5.

8.2.4.14. Setting the amplitude modulation at 1172, the following stand to be made:

FREQUENCY (S6)	50 MHz
MODE (S2)	CW
MODULATION FREQ (S3)	VERNIER
Level meter (M2)	+3 dBm
Output divider (S4)	0 dBm

Power meter to the output RF OUT (SO7) of 1172 follow. The potentiometer VERNIER (P2 set) 0.5 mW (-3 dBm press). Button VERNIER (S3) button and the MODULATION LEVEL potentiometer (P1) on the instrument the M1 full scale (100% AM set).
Adjust the potentiometer on the P1001 power meter 2 mW (+3 dBm).

9. POSSIBLE MALFUNCTIONS AND THEIR SOLUTION

Held on the front panel LEDs ACCURACY (D13, D14, D15) and UNLEVELLED (D17) facilitate troubleshooting.
ACCURACY The LEDs (D13, D14, D15) help with the LED: UNLEVELLED of the four internal PLL circuits, the fault finding.
Each PLL circuit contains a LED that will light immediately starts when the PLL circuit has fallen out of step. The failure of the supply voltages for example, can thus make an impression that the fault lay in another unit. This causes e.g. the failure of the-18-V power a flashing LED ACCURACY (D13, D14, D15). (This phenomenon also points to the falling out of step one of the PLL circuit).
Therefore one must consider calculations for troubleshooting especially Speisespan.
The troubleshooting is facilitated by the as accessories included extension cards.
If Austascheinheiten available, can be found just by inserting a proper unit, whether the error is caused by the suspected unit.
Before starting the troubleshooting, we examine whether the institutions are operating on the front panel in the correct position. Even loose cables or connectors with contact errors can be the cause of disturbances. Therefore necessary to begin these deficiencies are corrected.
Below is the description of some of any errors and an indication of the likely causes.

It is assumed that the device has been previously calibrated properly and troubleshooting an appropriate heating time to prepare.

9.1. Occasionally occurring, but without surgery again vanishing disturbances

Cause: loose RF cable connections, contact error of connector sockets.

9.2. RF output level is too low (+10 dBm range)

If the output level in the divider at angles of 0 dBm and below is in order, so you search the error in the tighten electric circuit located on the card M10 Reed-relay RY1001.
At too low or completely missing RF signal (in any part of creation) is the error in the output divider to look at the contacts of the cable connection in the AM reference unit (M10), in the main amplifier (M9) or in the unit M3.
It is the reach M9 reference voltage necessary to consider their value in the maximum position of the potentiometer VERNIER, +10 dBm in the sub-creation: -2.5 V and the 0-dBm-part creation: -0.7 V (measured to the terminal unit 1 of the M9). (Is the pointer the HF-level indicate-grounds instrument in full-scale).
If you find these tensions in order, the unit M10 is perfect. Otherwise, we might think of a faulty IC.
RF output signal directly to check the output of M9. If that's OK, then the bug in the splitter to search.

If the output level of the unit M9 is low, measure RF level on the output of M8. The measured value must be at -10 dBm ...- 11 dBm. If the latter level is correct, then the M9 unit is defective. If this level is low, the error in the beat oscillator is to be sought M8.

9.3 pointer of the level meter instrument does not move (M2)
If the pointer is at one end of the scale, there is a defect in the unit M10 IC.

9.4. The LED lights UNLEVELLED (display of the clipping: D12)
The output RF OUT (SO7) is not terminated with 50 ohms. The tip of the AM signal exceeds +13dBm (this is not a fault, but a false operation, more details in 's Manual). Unit M9 defective splitter or faulty connection RF cable.
Power meter connected directly to the output of M9. (If the power meter measures up to 10 mW, a 10-dB attenuator is inserted.)
If the output power from +13dBm to +5 dB LED UNLEVELLED (D12 light yet), the unit M9 is perfect. If the output level is fine, but the LED UNLEVELLED (D12) yet light, the error in the control circuit of the LED is to be sought.

9.5. Continuous flashing LEDs ACCURACY
If the LEDs light up continuously in the CW and flash in the FM mode, the unit is defective M2 or M7.
If the LEDs flash in all modes, the error in the PLL circuits is to be sought. Note: A fall out of the PLLs PLL4 beyond the frequency range (in the vicinity of 560 MHz) is not an error.

9.6. Error of the PLL circuits
The fall out of step can have many causes, eg to low supply voltage (power supply failure) to low output voltage at each unit, shorted, or broken RF link.
A bad cable or a defective unit can simultaneously fall out of multiple PLL circuits result. An error in the unit M6 contained quartz oscillator can cause the precipitation of all PLL circuits. In such a case, missing all six reference frequencies.

In Figure 28, the size and frequencies of reference signals are shown of the PLL circuits.
The signals with TTL levels can be examined on an oscilloscope.
The other signals are advantageously placed on a spectrum analyzer.
Error of the PLL circuit PLL1 is (to be found in the unit M3)
The precipitation may, by a failure of the unit M3 or M6, or the RF cable between M3 and M6 are caused.

Digital voltmeter connected to the measuring point of M3 (port 9).
"KHz" switch between ,000 , 999 switch and the monitor of the digital voltmeter indicated voltage. If their value 12 to 16 V DC, is examining one of the 1-kHz reference signal. If the 1-kHz signal is OK, check the connection cables to the units between M6 and M3. If it is OK, the fault lies in the M3 unit.

Error of the PLL circuit PLL2 (can be found in the unity M5)

Possible causes of failure: failure of the units Ml, M6, M5, or failure of the connection between the units M6 and M6.
Digital voltmeter connected to the terminal 16 of M5. If the frequency between 200 MHz and 259 spleen is connected, has to change the voltage to be measured from 0 to -7.8 V to -0.2 V and that per-MHz step (in this case, the M1 unit is working properly.).
The unity of the M6 next 1440-MHz reference signal can be tested directly in M6. If the signal of unity i3t M6 in order, one searches the error in the connection between M6 and M5, or in the unit M5

Failure of the unit includes PLL3 (units M7 and M8)

The precipitation is in the CW mode by a defect in the units M6, M7, M8 or the cable connecting them together may result. In the FM mode, the cause of the error may also lie in the unit M2. M8 to test the unit, the 1198-MHz signal is measured directly at the output. The 1200-MHz signal (120-MHz combination signal) and the 2-MHz signals are directly involved

PHASE-LOCKED LOOP	MODULE	INPUT-SIGNAL FREQUENCY	INPUT SIGNAL LEVEL	SIG MEASURED AT
1	M3	1kHz	TTL	M6 PL621
2	M5	1MHz	TTL	M6 PL622
		1440 MHz	-12 to -15 dBm	M6 PL624
3	M7	1198 MHz	-10 dBm ± 3 dB	M8 PL823
		1200 MHz (120 comb)	-15 dBm ± 5 dB	M6 PL625
		1.5 to 2.5 MHz	1volt p-p	M2 PL221
		2 MHz	TTL	M6 PL623
4	M4	1198 to 1718 MHz	-10 dBm ± 5 dB	M8 PL821
		1448 to 1487 MHz	- 2 dBm ± 3 dB	M5 PL522
		40 to 280MHz (40 comb)	-10 dBm ± 3dB	M6 PL626
		10 to 9.001MHz	TTL	M3 PL322

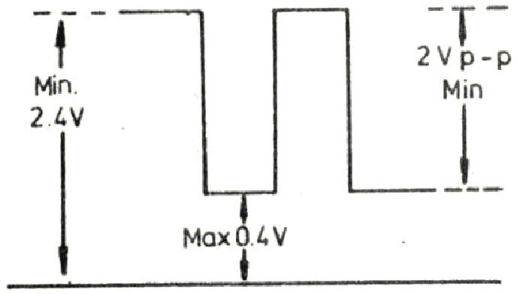

FIG. 28

to examine the output of the unit M6. With proper function of M6 can measure the signal shown in Figure 28, sizes.MODE switch (S2) on position FMx100, switches MODULATION FREQ (S3) in the EXT position and adjust potentiometer MODULATION LEVEL (P1) to the maximum. Frequency meter to the output of the unit M2 (SMC-plug).
The frequency must be 2 MHz (the exact reading with the Potentiometer P202) can be set. If placed at the entrance MODULATION FREQ EXT (Sol) +5 V and -5 V DC, is the frequency of 2.5 MHz and 1.5 MHz is depressed. Although the level of the signal coincides with the value shown in Figure 28, the unit M2 is perfect. If the units of the M6 M7 and M2 to the units, M8 entering signals are in order, the error in the unit M7 desolate in the cables is forwarded to search.

Error of PLL4

The precipitation of PLL-s can also be stemming from other PLL-s errors are caused. Before beginning the troubleshooting is to check whether PLL1, PLL2, PLL3 work correctly because that is a prerequisite for the proper function of PLL4.
Possible causes of malfunction of PLL4 is, errors in Ml, M8, M6, M3, M5, M4 or the cables connecting them together.
Digital voltmeter connected to the terminal 13 of M1.
It must be at 000 MHz: 0 V, at 250 MHz and 2.5V at 500 MHz: -5 V to measure.
Digital voltmeter connected to the connector 15 of M1.
It must be at 000 MHz: +6 ... +7 V, at 250 MHz: 0 V and
500 MHz: -8 V to measure.
If these voltages are ok, M1 properly.
Combined 40-MHz output (range) measure of M6. The level difference between the 40-MHz and 280 MHz signal may be a maximum of 4-5 dB.
Frequency of the output signal of the measuring unit M5. This is according to the position of the MHz switch repeatedly between 1448 MHz and 1487 MHz.
Frequency of the output signal from M3 measure. Frequency of the output signal (10.000 kHz - kHz position of the switch). It will thus be in a 000-kHz-10.000 MHz and position in the 999-position, 9.001 MHz.
If the output signal of the above-mentioned units is in order, one searches the error in the M4 or the cables connected. Digital voltmeter to the connector 14 of unit output M4. If properly function here M4 measurable voltage is 0 ±3 V. When an error of unity, this voltage also +14 ... +16V be.

9.7. Error of the BCD-frequency coding

The disturbance in the BCD-switching circuits can be caused by a faulty switch or a broken switch lead.
Five of the switches (2 to 6) use four wires and a ground wire.
The 100-MHz switch uses three wires and one ground wire.

9.8. Modulation Error

The error of internal modulation can be in the map M11. This map is the 400 Hz / 1 kHz tone generator.

The source of bias modulation at higher modulation frequencies (external modulation) in the wrong operation of the amplifier are M9.The function of the internal modulation generator can be tested in two ways. MODE switch (S2) in the position to bring AM, modulation frequency set at 400 Hz and bring the MODULATION LEVEL potentiometer (P1) in the maximum position. (The pointer 'of the Instruments M1 is in full scale). If the 1-kHz-button is pressed, the pointer must also go to the end position. If the jack MODULATION FREQ EXT (So1) (BNC) is connected to an oscilloscope, one must be able to measure a signal of 5 Vpp. If the modulation signal source on this. Way has been tested and still no amplitude modulation is performed, follow the path of the modulation signal. Oscilloscope to the port 1 of the unit M9 connect. The oscilloscope must see a 400 Hz or 1000 Hz signal of 1,75 Vpp. (Depending on the print button MODULATION FREQ).

9.9. Changing the units

After installing a replacement unit works in 1172, as a rule without further ado, in the interest of accuracy, however, must take place after replacement of some units, a calibration method.

In the table below, the calibrations are shown to be carried out after the replacement of individual units

No replacement unit

M1 D / A converters and signal
former M8 Beat Oscillator
M 9 Output Amplifier
M2 FM-Reference
M6 quartz reference
M3-kHz PLL step
M5 MHz step-PLL
M7 narrowband VCO-PLL
M4 broadband VCO-PLL
M10 AM-reference unit
M11 modulation unit
ML5 power supply board

Calibration

Re-calibration of PLL4 point 8.2.4.10

Re-calibration of PLL3 and PLL4 points 8.2.4.9 and 8.2.4.10 Set the RF level meter 8.2.4.12 point calibration of the FM reference point 8.2.4.13.

Precise adjustment of the oscillator control point 8.2.4.6 recruitment of point 8.2.4.7 PLL1 recruitment of PLL2 point 8.2.4.8 recruitment of PLL3 point 8.2.4.9

Examining the level of control point of M4 (terminal 5 of M4) see calibration of PLL4 point 8.2.4.10

Adjust the RF level meter set the modulation meter
8.2.4.11 and 8.2.4.12 points
Setting the modulation signal sources
Point 8.2.4.11

Setting of +18 V, -18 V testing, +7.3 V and +5 V points 8.2.4.1, 8.2.4.2, 8.2.4.3 8.2.4.5.

10.TECHNICAL MAINTENANCE

The unit requires no special maintenance.

11 EXAMINATION OF THE TECHNICAL STATE

11.1 General test requirements

Because of the following statements can examine, evaluate whether the generator is able to provide the type mentioned in 1172 under the technical data of electrical properties.
The instruments listed below can of course be replaced by other appropriate measuring instruments.
The tests are run in the other technological Daton cited reference temperature and at the specified voltage after a heating time of 2 hours. The measured values can be recorded to the end of the section located Measuring sheet.

The control measurements to use instruments

M1 DFT meters DC-100 MHz	Type 1646 / 2
M2 Converter 100-300 MHz (inset of M1)	Type 1688-U-81
M3 converter 0,3-3 GHz (insertion of Ml)	Type 1688-U-82
M4 distortion meter 20 Hz-25 kHz	Type 1510
M5 Microwave Power Meter 10MHz-10 GHz	Type 1384
M6 modulation meter 5-1000 MHz	Radiometer type-2 AFM
M7 0-100 MHz oscilloscope	Type 1555
M8 Generator 20 Hz-25 kHz	Type 12573
M9 spectrum analyzer 500 kHz-1, 5 GHz.	TAKEDA RIKEN TR-4110/ B
M10 1-520 MHz Sweep Generator	Wavetek 2002
M11 VSWR Bridge 5-525 MHz	Wiltron 60N50
ML2 measuring receiver 30-1000 MHz	RS USU1
M13 attenuator DC-1000 MHz	Weinschel 50-10
M14 attenuator DC-1000 MHz	Weinschel 50-20
M15 attenuator DC-1000 MHz	Weinschel 50-30
M16 attenuator DC-1000 MHz	Weinschel 50-40
M17 N-short	
M18 radiation measurement coil	
M19 28-dB broadband amplifier	

1.2. Examination of the frequency range and resolution

Frequency: 1 MHz-520 MHz
in 1-kHz increments Resolution: 1 kHz
The frequency and the resolution can be measured with a frequency meter.
In the CW and AM modes, each between 1 MHz and 520 MHz frequency lying switch step (56 steps) is set.Test equipment: M1, M2, M3
Measurement:
1. 1172 the following settings
FREQUENCY (S6) 50.000 MHz
MODE (S2) CW
MODULATION FREQ (S3) EXT
Level meter (M2) +3 dBm
Output divider (S4) +10 dBm
2. Output of 1172 must be connected to the input of the DFT-meter (at frequencies above 100 MHz a converter (M2 or M3 are interposed).Time base of the meter set to 100 ms.

3. KHz-coding of the frequency adjustment switch (S6) switch kHz in 1 kHz steps between 0 and 9 and to check the meter, if the frequency increases by 1.00 kHz ±1 digit.
4. The test described in section 3 through-measurement by the other switch.

11.5 Examination of the frequency accuracy

Technical data

Accuracy

CW and AM modes	±0.001%
Mode FMx1	± 0.001% + 10 kHz
Mode FMx100	± 0.001% + 45 kHz

Method:

The frequency accuracy is measured with a frequency counter been operating in the CW and AM 1-520 MHz frequencies with the help of all the circuits generated, which are synchronized with the frequency of the quartz oscillator. It is therefore sufficient to measure the accuracy rate at a single frequency. (This is consistent with the frequency accuracy of the crystal oscillator.) In the FM mode, the frequency accuracy depends on the accuracy of the FM system.

The accuracy of the FM system consists of the accuracy of the voltage-controlled oscillator and crystal oscillator.

In modes FMx1 FMx100 the frequency and accuracy in the position VERNIER by depression, with the top of the maximum sine wave is measured stroke corresponding voltage.

Instrument:

M1 measure:

1. At 1172 the following settings

FREQUENCY (S6)	40.000 MHz
MODE (S2)	CW
MODULATION FREQ (S3)	VERNIER
Level meter (M2)	+3dBm
Output divider (S4)	+10dBm

2. Output of 1172 combined with the input of the DFT-meter
3. The reading of the payer value must be between 39.39959 MHz and are 40.00041 MHz. The reading is recorded in a line 2 of the Measuring sheet.
4. Set the switch of 1172 in the following positions

FREQUENCY (S6)	1.000 MHz
MODE (S2)	FMx1
MODULATION FREQ (S3)	VERNIER
Modulation means (M1)	5 kHz

5. The reading of the frequency counter value must be from 994.98 to 1015.02 kHz. The reading is in line 3 of Measuring sheet entered.
6. MODE switch (S2) of 1172 on position FMx100.
7. The reading of the frequency payer value must be from 1454.98 to 1545.02. The reading is in line 4 of Measuring sheet entered.

11.4. Examination of the frequency stability

Technical Data Stability:	≤0.5ppm/h	
	≤0.2ppm/h	(After 3 continuous heating time)

in the operating mode FMx1 500 Hz/10 min

Method: The frequency stability is measured with a frequency counter in the cases cited in the technical data of time intervals after a heating time of 2 hours.

Measuring instruments: M1, M3

Measurement:

1. In 1172 make the following settings:

FREQUENCY (S6)	520.000 MHz
MODE (S2)	CW
MODULATION FREQ (S3)	VERNIER
Power Meter (M2)	+ 3 dBm
Output divider (S4)	+10 dBm

2.Output RF OUT (SO7) of 1172 connected to the input of the frequency counter.

3. The minutes from the frequency counter for a period of warming. 3 hours displayed frequency values at intervals of 15 minutes read (up to 9 digits). The frequency of migration may exceed the voltage is not within a period of 1 hour, 104 Hz. The measured frequency-migration in line 5 of about Measuring sheet.

4. Button press FMx1 kHz and adjust to the lifting knives 5Khz

5. The frequency counter displayed by the frequency values at intervals of 5 minutes to record (up to 9 digits) The frequency of migration may exceed the value within 10 minutes not 500 Hz. The measured value is in line 6 of Measuring sheet entered.

11.5. Testing the accuracy of the output level

Technical data

Output Level:	±13 - 127 dBm (1 V - 0.1 / uV)
Accuracy:	± 1.25 dB (+13 - 7 dBm)
	± 1.95 dB (-7 - 77 dBm)
	± 2.75 dB (-77 - 127 dBm)

Components of accuracy

Frequency dependence:	± 0.75 dB (+13 - 7 dBm)
Instrument measuring:	± 0.5 dB (at 50 MHz)
Divider output:	± 0.7 dB to 70 dB
	± 1.5 dB to 120 dB

Method

The level accuracy of ± 1.25 dB (between +13 dBm and -7) is composed of measuring inaccuracy of the meter (± 0.5 dB) and frequency dependence (± 0.75 dB combined). Both errors are measured with a power meter.

The frequency dependence is measured in 10 MHz steps in the frequency range 10 MHz - 520 MHz compared to 50 MHz at the levels of +10 dBm and +0.The measuring error of Level measuring instrument (M2) is measured at 50 MHz. The measuring points are +3 dBm (2 mW), 0 dBm (l mW), -6 dBm (0.25 mW). This same measurement is also in the values of +13 dBm, +10 dBm and +4 dBm to measure so that it switches to the output of a 10-dB attenuator in series.

The error of the output divider (S4) is measured by the Subtitutions methode.

11.5.1. Testing the accuracy of Level measuring instrument (M2)

Test Equipment: M5, M13

Measurement:
1. At 1172 the following settings

FREQUENCY (S6)	50.000 MHz
MODE (S2)	CW
MODULATION FREQ (S3)	VERNIER
RIGID CYLINDER level meter (M2)	0 dBm
Output Divider (S4)	0 dBm

2. Calibrated power meter and then connect the output of 1172.
3. With the level-adjust potentiometer VERNIER (P2 set) of 1172 on the device Level measuring instrument + 3 dBm (2 mW), 0 dBm (1 mW) and -6 dBm (0.25 mW). Deviation on the dBm scale read the power meter in dBm.
4. Add 10 dB attenuator between the output of 1172 and the measuring head of the power meter. Button (34) of +10 dBm output divider press of 1172 and repeat the measurement described in section 3. The result (maximum deviation) shall be noted on the Measuring sheet. The resulting measurement result of point 3 is in line 8 (dBm) and the measurement result obtained in section 4 in line 7 (+10 dBm, respectively).

11.5.2. Surge test (frequency dependence from the output level)

Test equipment: M5, M13, Measurement:
1. In 1172 make the following settings

FREQUENCY (S6)	50.000 MHz
MODE (S2)	CW
Level meter (M2)	-1 dBm
Output divider (S4)	+10 dBm

2. The power meter over a 10-dB attenuator to the output RF OUT (SO7) by 1172 to connect. Detection limit of 1 mW power meter to adjust.
3. Output level of 1172 set with the fine regulator so that the power meter displays a level of -1 dBm.
4. Frequency of 1172 from 10 to 520 MHz in 10 MHz increments vote dBm at the scale of the deviation from the power meter at 50 MHz measured value (-1 dBm read). Maximum value in row 9 of about Measuring sheet. This should be +0.75 dB.
5. Output divider (S4) of 1172 in the 0-dBm-position. 10-dBm output attenuator between the RF OUT (SO7) by 1172 and remove the measuring head of the power meter. Frequency of 1172 set at 50.000 KHz and repeat the procedures described in points 3 and 4 measurements may be read off the maximum error (the ±0.75 dB).Enter the line 10 of the Measuring sheet.

11.5.3. Testing the accuracy of the output divider (34)

Test equipment: M9 or M12 and M13, M14, M15, M5, Measurement:
1. At 1172 the following settings

FREQUENCY (S6)	520.000 MHz
MODE (S2)	AM
MODULATION FREQ (S3)	VERNIER
Level meter (M2)	+3 dBm
Output dividers (S4)	0 dBm

2. Power meter to the detection limit of +10 dBm set. Measuring head to the output RF OUT (So7) by 1172 to connect.
3. Adjust the potentiometer MODULATION LEVEL (P1) from 1172 to the power meter a level of +7 dBm (0.5 V).

(In this case suggests the hand of the Level measuring instrument (M2) from 1172 to beyond the end position.)
4. Output RF OUT (SO7) of 1172 on a 10-dB attenuator with the selective measurement receiver M12 or the 50-ohm input of the spectrum analyzer M9 link.
5. Spectrum as follows:

Set Center Frequency	520 MHz
SCAN TIME	20 ms / div
IF GAIN	20 dB
BANDWIDTH	300 Hz
DISPERSION / div	2 kHz / div
RF ATT	20 dB
OPTIMUM SELECTOR	MANUAL
SWEEP MODE	PER DIV.
LOG / LIN	LOG
dB / div	2 dB / div
VIDEO FILTERS	10 kHz

6. The 520 MHz spectrum corresponding line brought to the screen center and adjust the amplitude with the Calibration button the analyzer to 5 cm.
7. Output divisor of 1172 set to -10 dBm.
8. 10 dB attenuator switch.
9. MODULATION LEVEL potentiometer (P1) of 1172 set so that the spectrum again displays a picture of 5 cm greetings.
10. Measuring head of the power meter to the output RF OUT (SO7) by 1172 to connect. Output divider (S4) to 0 dBm set.
11. Deviation from the reference level of +7 read dBm meter on the power. (This is the fault of the 10-dB attenuator is). Measurement result at line 11 of about Measuring sheet.
12. Repeat steps 3 through 11 members using the available damping.

Atenuator	Step Atenuator	Data sheet line
10 dB	-10	11
20 dB	-20	12
30 dB	-30	13
60 dB	-60	14
90 dB	-90	15

The maximum error allowed to create part of 70 dB ±0.7 dB to be about ±1.5 dB.
The measurement of - 90 dBm divider position can only be done if instead of the spectrum analyzer (M9), a selective receiver RS USU1 (M12) as the meter is used.

11.6. Examination of the harmonic content Specifications

Harmonic spacing:	≥20 dB 1 to 10 MHz
	≥30 dB 10 to 520 MHz

Method
The amplitude of the harmonics is measured with a spectrum between the levels of +10 dBm and +3 dBm.
Instrument: M9, Measurement:
1. At 1172 the following settings

FREQUENCY (S6)	1.000 MHz
MODE (S2)	CW
MODULATION FREQ (S3)	irrelevant
Level Meter (M1)	0 dBm
Output divider (S4)	+10 dBm

2. Output RF OUT (SO7) of 1172 to connect to the RF input by the spectrum analyzer.

3. Spectrum analyzer set as follows

IF GAIN	20 dB
OPT. SELECTOR	AUTO
DISPERSION	1 MHz / DIV
CENTER FREQ	0 MHz
RF. ATT	40 dB
LOG / LIN LOG	10 dB / div
VIDEO FILT	OFF

4. 1172 to 10 MHz frequency increase and read the value of the harmonic distance in dB. (When increasing the frequency and the dispersion switches / DIV to advance to the higher frequency values, so that the appropriate number of harmonics is visible.)
tune the carrier frequency 1172 to 10 MHz and read the distance of the maximum harmonic and enter on line 16 of the Measuring sheet. The harmonic distance must be at least 20 dB.
5. Divider output of 1172 to 0 dBm and RF attenuator of the spectrum analyzer set to 30 dB. The procedure described in item 4 repeat measurement and record the distance of the read maximum harmonic at line 17 of the Measuring sheet.
6. Divider output of 1172 to +10 dBm and RF Attenuator of the spectrum analyzer set to 40 dB.
7. Frequency of 1172 10 to 520 Mhz. Switch DISPERSION / DIV and CENTER FREQUENCY dial the spectrum analyzer during the measurement as required. (With increasing frequency, both institutions operate against the higher frequency values are adjusted to). The frequency of 1172 in 10 MHz increments. The distance of the maximum harmonic and read about in line 18 of the Measuring sheet. The harmonic distance must be at least 30 dB.
8. Divider output of 1172 to 0 dBm and RF attenuator of the spectrum analyzer set to 30 dBm.
9. The procedure described in section 7 Repeat measurement and record the distance of the maximum harmonic at line 19 of the Measuring sheet.

11.7. Examination of the countershaft content

Technical data

Carrier frequency	Area of the spurious frequencies	Spurious below the carrier
1 – 3 Mhz	1 – 3 Mhz	≥60dB
3 – 250 Mhz	3 – 250 Mhz	≥60dB
3 - 350 Mhz	3 – 350 Mhz	≥50dB
3 – 520 Mhz	3 – 1000 Mhz	≥35dB

Method

With the spectrum analyzer, the level of non-harmonic components at the maximum output level (+10 dBm) is measured.
Instrument: M9, Measurement:
1. At 1172 the following settings

FREQUENCY (S6)	1,000 MHz
MODE (S2)	CW
MODULATION FREQ (S3)	EXT
Level meter (M2)	0 dBm
Output Divider (S4)	+10 dBm

2. Output RF OUT (So7) of the generator in 1172 with the RF input of the spectrum analyzer (M9) connect. The

the spectrum analyzer to find, with the exception of the RF Attenuators in point 3 of Section 11.6 above positions. The attenuator is set to 30 dB.
3. Frequency of 1172 between 1 MHz and 3 MHz rate. The spurious must be between 1 and 3 MHz to 60 dB below the level of the wearer. The maximum non-harmonic component is read and entered in line 20 of the Measuring sheet.
4. Frequency of 1172 3 to 10 MHz in 1 MHz steps, and between 10 and 520 MHz in 10 MHz increments. (Buttons DISPERSION / DIV and CENTER FREQUENCY of the spectrum analyzer, adjust as needed. With increasing frequency are also these institutions operate against the higher frequency values to provide).
Further measurements are to perform in the table below.

Carrier frequency	Area of the spurious	Spacing of the spurious	Data sheet line
3 - 250	3 - 250	60dB	21
3 - 350	3 - 350	50dB	22
3 - 520	3 - 1000	35dB	23

11.8. Examination of the Disturb – AM,
Technical Data**:** - 55 dB below the level of the carrier in the range 50 Hz kHz-15.
Method: The measurement is carried out in the AM mode the modulation meter in the minimum position of the steady level regulator in relation to the 10% amplitude modulation.
Test equipment: M6, M4 measurement:
1. In 1172 make the following settings:

FREQUENCY (S6)	500.000 MHz
MODE (S2)	AM
MODULATION FREQ (S3)	1 kHz
Level meter (M2)	-7 dBm
Output Divider (S4)	0 dBm

2. Output RF OUT (So7) of 1172 with the NF - input of M2 (M6) and then AF OUTPUT connect output of M6 to the input of M4.
Modulation meter reads as set

Input attenuator	10 dB
IF bandwidth	±400 kHz
FAST instrument	
METER RANGE	10%
Filter	50 Hz - 15 kHz

4. Modulation rate of 10% set. M4 to V- measurement and 1V detection limit set. Now must the pointer of the instrument (M4) point to 0 dB. This level is 20 dB below the level of the support (10% PM).
5. Modulation OFF.
6. Measuring how many dB below the level of interference lose measured level (case of 10% AM) is situated.
After adding 20 with the measurement result must be bookings for more than 55 dB (Example: If the measurement is 41 dB, 20 dB is added to and receives 61 dB > 56 dB).
The calculated value is in row 24 of the Measuring sheet entered.

11.9. Examination of the disturbance-FM Technical Data

≤250 Hz in 50 Hz - 15 kHz, Method:

The disturbance - FM is measured at the maximum frequency (520 MHz) and the maximum output level (+13 dB) in the range 50 Hz-15 kHz with a modulation meter. The generator is operated in the FM mode, because the disturbance - FM here has the maximum value.

Instrument: M6, Measurement:

1. In 1172 make the following settings:

FREQUENCY (S6)	520.000 MHz.
MODE (S2)	FMx100
MODULATION FREQ (S3)	EXT
Level meter (M2)	+3dBm
Output divider (S4)	+10dBm

2. Output RF OUT (So7) by 1172 to connect to the modulation input of the knife. Modulation knife set as follows.

Input Attenuator	20 dB
IF bandwidth	+400 KHz
METER RANGE	3 kHz
Instrument	FAST
Filter bandwidth	50 Hz - 15 kHz

On the modulation of the average level of the knife FM in the +FM and -FM positions (excluding the rash appears, at times read). In case the cases must be able to measure a value below 250 Hz. The larger of the two values is in line 25 of the Measuring sheet entered.

11.10. Examination of the internal modulation frequency

Specifications: 400 Hz and 1 kHz + 5%, Method:

The frequency of the measure to the jack MODULATION FREQ EXT (So1) for synchronization purposes brought out signal with a frequency counter.

Instrument: M1, Measurement:

1. In 1172 make the following settings:

FREQUENCY (S6)	irrelevant
MODE (S2)	AM
MODULATION FREQ (S3)	1 kHz
Level meter (M2)	irrelevant
Output divider (S4)	irrelevant

2. Input MODULATION FREQ EXT (So1) by 1172 (synchronous output) to the input of the frequency meter connected.

3.The displayed frequency value read off and enter the result on line 26 of the Measuring sheet. The frequency must lie between 950 Hz and 1050 Hz.

4.MODULATION FREQ (S3) pressing 400 Hz button 1172 .Displayed by the frequency meter frequency value read again. Result in line 27 of about Measuring sheet. The frequency shall be between 380 Hz and 420 Hz.

11.11. Examination of the AM-accuracy

Technical data

Accuracy: ± (0,05 M + 5)% ,(M is the chosen modulation depth).

This value is dBm at the output levels of ≤ +3dBm.

An AM is possible about the level of +3 dBm, where the tip of the modulated signal of the value does not exceed +13 dBm. Method:
The modulation depth is measured by a modulation meter
Instrument: M6
In 1172 make the following settings:

FREQUENCY (S6)	520.000 MHz
FASHION (S2)	AM
MODULATION FREQ (S3)	1 kHz
Level meter (M2)	-3 dBm
Output divider (S4)	0 dBm

Output RF OUT (SO7) of 1172 connected to the input of the modulation meter.
Modulation knives set as follows:

Input Attenuator	10 dB
IF bandwidth	+400 KHz
METER RANGE	100% AM
Instrument	FAST
Filter bandwidth	50 Hz - 15 kHz

To adjust the modulation meter (M1) by 1172 a modulation degree of 30%. The M6 to the instrument, obtained value must be 23.5 to 36.5%. The measured value is in row 28 of the Measuring sheet entered. To adjust the modulation meter (M1) of 1172 a modulation rate of 90%. The value read on the instrument must M6 are between 80,5 and 99,5%. The measured value in row 29 of about Measuring sheet.

11.12. Examination of the AM bandwidth Specifications

Modulation Bandwidth: DC - 200 kHz, 3 dB, with an external modulation. Method:
The measurement is carried out with a knife modulation, the amplitude of the external modulation signal source is kept constant. (Should the level be frequency dependent, so while the change is the frequency of the modulation meter (M1) of 1172 always set the same value.) The measurement is taken at 50% AM, because the calibrated in dB modulation knife at this level a dB scale (-6dB) has.
Test equipment: M6, M8. Measurement:
1. At 1172 the following settings:

FREQUENCY (S6)	50.000 MHz
MODE (S2)	AM
MODULATION FREQ (S3)	EXT
Level meter (M2)	+3dBm
Output divider (S4)	0dBm

2. M8 generator to the input MODULATION FREQ. EXT (So1)
connect from 1172
Output RF OUT (SO7) of 1172 connected to the input of the modulation meter M6.
3. On the Modulation meter to make the following settings

Input Attenuator	20 dB
IF Bandwidth	±400 kHz
METER RANGE	100% AM

FAST instrument
Filter bandwidth 75 kHz

4. Frequency of the generator M8 to 1 kHz (sine wave) and amplitude
the output signal to 10 Vpp (3.55 Vrms) Adjust.
5. The read on the modulation meter modulation depth with the potentiometer MODULATION LEVEL (P1) to 50% set (This is on the lowest scale of the instrument to the value of -6 dB).
6. Eruption on the modulation meter (M1) of 1172 remember, because we must be maintained throughout the change in the frequency of the modulation signal of the deflection..
7. Frequency modulation signal source between 1 kHz and 20 kHz others. Thereby observe the scale of the modulation meter. The display word must be from -6 to -9 dB. Change in dB at line 30 of about Measuring sheet.

11.13. Examination of the AM-harmonic distortion

Technical data

THD: 3%	to 70% modulation depth
THD: 5%	to 80% modulation depth

1 kHz frequency

These values apply to the dBm output levels of $\leq$ +3dBm. An AM is also possible through +3 dBm, where the tip of the modulated signal no exceeds +13 dBm.

Method:

The measurement is carried out with a knife and a modulation distortion meter, which is measured by the distortion of the demodulated signal modulation meter. The measurement is carried out at the minimal level, because the AM distortion is the worst here.

Test equipment: M4, M6

Measurement:

1. In 1172 make the following settings:

FREQUENCY (S6)	520,000 MHz
MODE (S2)	AM
MODULATION FREQ (S3)	1 kHz
Level Meter (M2)	-7 dBm
Output Divider (S4)	0 dBm

2. Output RF OUT (So7) of 1172 with the input of the modulation meter and AF output of the modulation meter connected to the input of the distortion meter.
3.Share on the modulation meter a modulation rate of 70% one. If the modulation knife in the switch positions + AM and -AM do not see the same value, the modulation is set so that the mean value of the two amounts to 70%.
4.Distortion measure. The reading should be $\leq$ 3%. Measured value in row 31 of about Measuring sheet.
5.Modulation meter in sections 3 and 4 set to 80% modulation level.
THD at line 32 of about Measuring sheet. The measured value can not exceed 5%.

11.14. Examination of the FM - Hub accuracy

Technical data:

in FMx1	± 250 Hz
in FMx100	± 35 kHz

Method:

Stroke size in both configurations with a nit in the amplitude of the peak of the sine wave modulation of tune matching voltage and frequency test with a knife.

Meter: M1, Measure:
1. In 1172 make the following settings:

FREQUENCY (S6)	50,000 MHz
MODULATION (S2)	FMx1
MODULATION FREQ (S3)	VERNIER
Level Meter (M2)	+3 dBm
Output Divider (S4)	+10 dBm

2. Output RF OUT (So7) of 1172 to create the entrance of the frequency meter.
3. At the stroke measurement instrument a rash of 5 kHz (full scale adjust). Frequency read and fill in line 33 of the Measuring sheet
4. A frequency detuning of 0 kHz and set about the measured frequency value in row 34 of Measuring sheet.
5. The frequency difference between the two measurements,
4.749 and 5.251 kHz.
The result in row 35 of about Measuring sheet.
6.MODE button FMx100 (S3) button and pointer of the stroke measurement instrument to set 5 KHz. Frequency measure, and enter on line 36 of the measurement Measuring sheet.
7. A frequency detuning of 0 kHz and set about the measured frequency value in row 37 of the Measuring sheet.
8. The difference in points 6 and 7 must be measured frequencies from 464.9 to 535.1 kHz. This measured value is in row 38 of the Measuring sheet entered.

11.15. Examination of the FM bandwidth

Technical data: External modulation frequency DC - 25 kHz (1dB), method:
The FM modulation bandwidth is measured with a knife, while the signal amplitude is maintained constant as a modulation signal source used in the generator.
The measurement is in proportion to the value of 0dB on the scale calibrated in dB of the modulation meter (stroke of approx. 316 kHz to carry out).
Test equipment: M6, M8, Measurement:
1. In 1172 make the following settings:

FREQUENCY (S6)	520,000 MHz
MODE (S2)	FMx100
MODULATION FREQ (S3)	EXT
Level Meter (M2)	+3dBm
Output Divider (S4)	+10dBm

2. Output RF OUT (So7) from 1172 to the RF input of the modulation meter and output of the tone generator connected to the input FREQ MODULATION EXT (So1) of 1172.
3. On the Modulation meter settings are titled to the following:

Input Attenuator	20 dB
IF bandwidth	+400 KHz
METER RANGE	300 kHz FM
Instrument	FAST
Filter bandwidth	75 kHz

4. Frequency of the generator M8 to 1 kHz (sine) and adjust amplitude of the output signal of 10 Vpp (3.55 Vrms).

5. Adjust the potentiometer MODULATION LEVEL (P1) pointer to the division of 0 dB scale-dB of the modulation meter. (This corresponds to one has from 316 kHz)
6. Rash at the Frequency stroke indicating instrument (M1) of 1172 remember, because we must be maintained throughout the change in the frequency of the modulation signal of this deflection.
7.Frequency modulation signal source of 1 kHz to +25 kHz others and watch the scale of the modulation meter. The display value must lie between 0 dB and -1 dB. The maximum deviation (in dB) at line 39 of the Measuring sheet entered.

11.16. Tests of the FM-distortion factor

Technical data:
THD: ≤ 4% at 3 - 500 kHz peak deviation and 1 kHz modulation frequency
Method:
The THD of the demodulated signal Modulationsraes3er is measured with the help of THD (total harmonic distortion below 3 kHz takes the reason of the FM noise).
Test equipment:, M6, M4. Measurement:
1. In 1172 make the following settings:

FREQUENCY (S6)	520,000 MHz
MODE (S2)	FMxl
MODULATION FREQ (S5)	1 kHz
Level meter (M2)	+3dBm
Output divider (S4)	+10dBm

2. Output RF OUT (So7) by 1172 to connect to the RF input of the modulation meter and then the audio output of the modulation meter to the input of the distortion meter.
3. On the modulation knife following settings are made:

Input Attenuator	20 dB
IF bandwidth	+400 KHz
METER RANGE	FM 3 kHz
Instrument	FAST
Filter bandwidth	50 Hz - 15 kHz

4.The potentiometer MODULATION LEVEL (P1) from 1172 to the
Modulation meter a stroke of 3 kHz.
THD of the demodulated signal with a distortion factor meter set. The total harmonic distortion must be below 4%. The measurement result is in line 40 of the Measuring sheet entered.
5. Measuring range switches of the modulation measurer set to a stroke of 300 kHz. Press push button FMx100 (S2) of 1172.
Potentiometer MODULATION LEVEL (P1) of 1172 adjust exactly to the stroke of 300 kHz.
Total harmonic distortion of the demodulated signal with a distortion measure diameter. The total harmonic distortion must be below 4%. Measurement result at line 41 of about Measuring sheet.

11.17. Examination of the output impedance

Technical data
VSWR: ≤1,3 at levels of 0,1 V
Method:
The measurement is performed with a VSWR bridge. The reflected signal is indicated with a spectrum analyzer. (That is, of course, is the selective measurement receiver M12).

The reference level is set by the short end of the measuring point of the bridge (total reflection) Then, when the short circuit through the output RF OUT is replaced by 1172, the return loss can be measured in dB. Then, hearing the VSWR value should be selected in the table.
The value of VSWR amounts to ≤ 1,3. This corresponds to a return loss of 17 dB.
Test equipment: M9, M10, M11, M17. Measurement:
1. In 1172 make the following settings:

FREQUENCY (S6)	520.000 MHz
MODULATION (S2)	CW
MODULATION FREQ (S3)	EXT
Level meter (M2)	+3dBm
Output divider (S4)	-10dBm

2. The output impedance is measured with the measuring arrangement shown in Figure 29.
M10-emergence of the generator to the input RF INPUT connect the measuring bridge and connect the jack piece of coaxial short-circuit DEVICE UNDER TEST.
REFLECTED RF OUTPUT of the bridge output to the input of the spectrum analyzer connected.
3. Frequency of the driver generator (M10) in the CW mode at 250 MHz and adjust the output level to -10dBm.
4. On the Spectrum are set:

IF GAIN	30 dB
CENTER FREQ	250 MHz
OPTIMUM SELECTOR	AUTO
LOG / LIN	LOG 10 dB / DIV
DISPERSION	50 MHz / DIV
RF ATT	0 dB

M10 levels of the generator set so that the tip of the 250 MHz signal with just the top grid line of the analyzer (+80 dBμ coincide). (This is the 0-dB reference will be).
5. Piece of coaxial short-circuit separated from the measuring bridge and connect it to its place of the RF output 1172 Frequency of the sweep generator 1-500 MHz vote. Meanwhile, the amplitude of the observed spectrum to the measurable signal. This must at any frequency at min. 21 dB below the reference levels. (The 520MHz signal is to ignore because it comes from the generator 1172) Now is the reference level at the nearest signal to read and its value (to be completed in dB) at line 42 of the Measuring sheet.

11.18. Testing of RF radiation

Technical Data:
≤ 1μV measured using a coil with two turns from 25 mm diameter at a receiver input impedance is 50 Ohms in a radius of 25 mm from the device.
Method:
Made of a 26-dB amplifier and the spectrum of existing selective 50-0hm receiver is calibrated to 1μV. Then the radiation of the apparatus with the above-described, measured this system connected coil. (Fig. 30) during the measurement is to ensure that it is not the signal of another source of interference (such as a radio station) measures. To avoid this, the measurement shall be made in a shielded measurement room.
Test equipment: M9, M18, M19

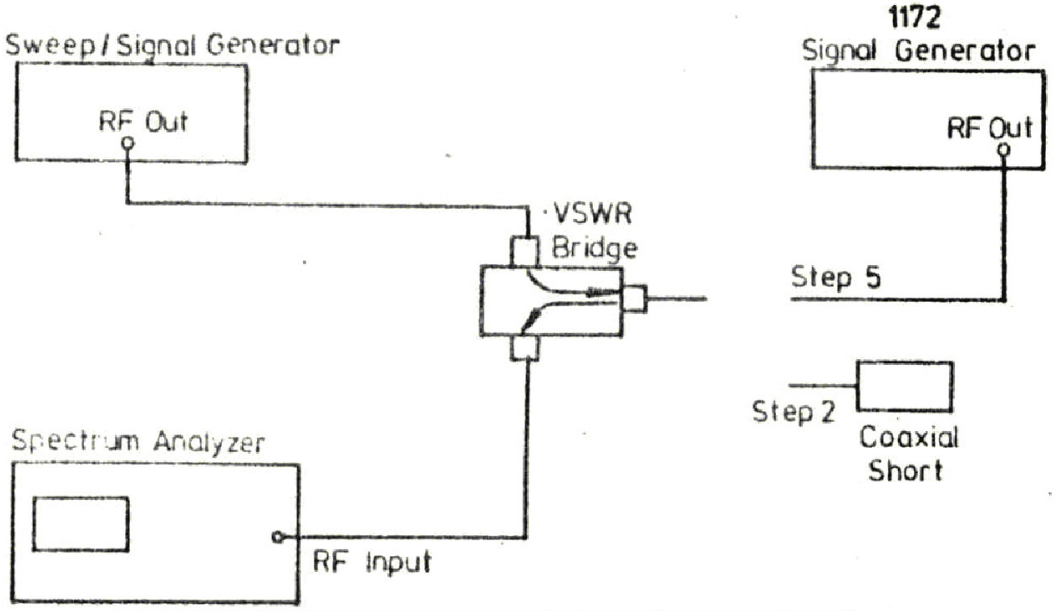
Sweep / Signal Generator
RF Out
1172
Signal Generator
RF Out
VSWR
Bridge
Step 5
Step 2
Coaxial
Short
Spectrum Analyzer
RF Input

FIG.29

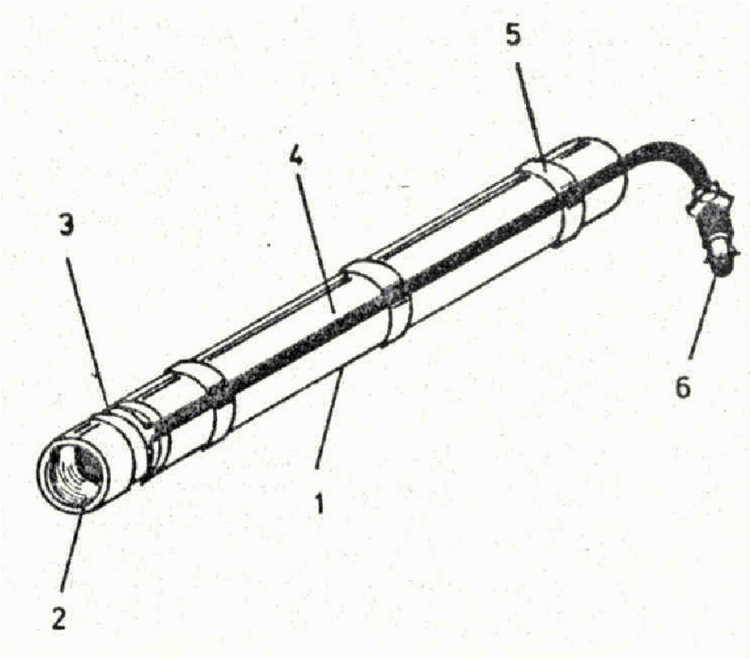
5
4
3
6
1
2

FIG.30

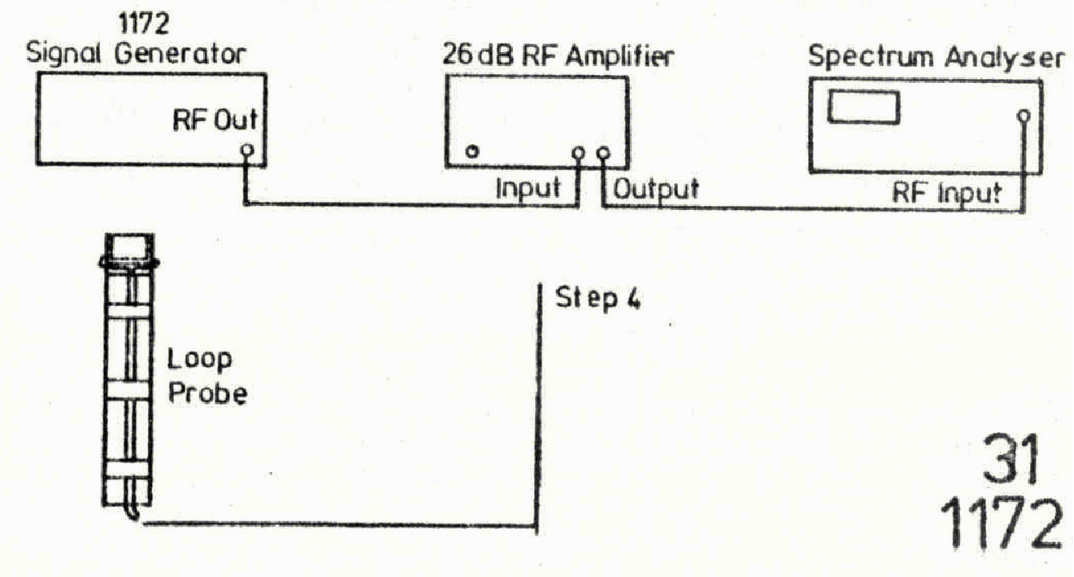
1172
Signal Generator
RF Out
26 dB RF Amplifier
Input
Output
Spectrum Analyser
RF Input
Step 4
Loop
Probe
31
1172

Measurement:

1. In 1172 make the following settings:

FREQUENCY (S6)	500.000 MHz
MODE (S2)	CW
MODULATION FREQ (S3)	irrelevant
Level meter (M2)	+3dBm
Output divider (S4)	-100dBm

2.The measuring equipment is set up according to the picture 31.

3. On the following spectrum analyzer settings are as follows:

IF GAIN	40 dB
CENTER FREQ	500 MHz
OPT. SELECTOR	AUTO
DISPERSION	50 kHz / div
RF ATT	0 dB
VIDEO FILTERS	100 Hz
SCAN MODE	INT
LOG / LIN	LOG 10 dB / DIV

4.Spectrum analyzer at 1µV (+20dBµ division).

5. Measuring coil connect the input of the RF amplifier. Scan device around with the measuring coil .The largest displayed value must be less than 1µV.

Measured value in row 43 of the Measuring sheet about.

	Prüfung	Einstellung: Freq. MHz	Modulation: Betrieb.	Modulation: Frequenz	Modulation: Ampl.	Pegelmes. dBm	Attenuator dBm	Prüfungsergebnis: Minimum	Meßwert	Maximum	Zeile
11.2	Freq. bereich	1-520	CW	-	-	+3	+10				1
11.3	Frequenz-genauigkeit	40	CW	-	-	+3	+10	39,99959 MHz	MHz	40,00041 MHz	2
		1	FM×1	VERN	5 kHz			994,98 kHz	MHz	1,01502 kHz	3
			FM×100					1,45498 kHz	MHz	1,54502 kHz	4
11.4	Frequenz-stabilität	520	CW	-	-	+3	+10		Hz	104 Hz	5
			FM×1	VERN.	5 kHz				Hz	500 Hz	6
11.5.1	Genauigkeit des Pegelmes.	50	CW	-	-	+3 -7	+10	-0,5 dB	dB	+0,5 dB	7
							0		dB		8
11.5.2	Pegelhaltung	1-520	CW	-	-	-1	+10	-0,75 dB	dB	+0,75 dB	9
						-1	0		dB		10
11.5.3	Genauigkeit des Teilers	520	AM	VERN		(+7)	-10	-0,7 dB	dB	+0,7 dB	11
							-20		dB		12
							-30		dB		13
							-60		dB		14
							-90	-1,5 dB	dB	+1,5 dB	15
11.6	Oberwellen-gehalt	1-10	CW	-	-	0	+10	20 dB	dB		16
							0		dB		17
		10-520					+10	30 dB	dB		18
							0		dB		19
11.7	Nebenwellen-gehalt	1-3	CW	-	-	0	+10	60 dB	dB		20
		3-250						60 dB	dB		21
		3-350						50 dB	dB		22
		3-520						35 dB	dB		23
11.8	Stör-AM	500	AM-CW	1kHz	10 %	-7	0	55 dB	dB		24
11.9	Stör-FM	520	FM×100	EXT	min	+3	+10		Hz	250 Hz	25
11.10	Interne Mod-frequenzen		-	400Hz	Skalen-mitte	-	-	380 Hz	Hz	420 Hz	26
				1kHz				950 Hz	Hz	1050 Hz	27
11.11	AM-Genauigkeit	520	AM	1kHz	30 %	-3	0	23,5 %	%	36,5 %	28
					90 %			80,5 %	%	99,5 %	29
11.12	AM-Bandbreite	50	AM	EXT	50 %	+3	0		dB	3 dB	30
11.13	AM-Klirrfaktor	520	AM	1kHz	70 %	-7	0		%	3 %	31
					80 %				%	5 %	32
11.14	FM-Hubgenauigkeit	50	FM×1	VERN	5 kHz	+3	10		kHz		33
					0				kHz		34
					-			4,749 kHz	kHz	5,251 kHz	35
			FM×100		5 kHz				kHz		36
					0				kHz		37
					-			464,9 kHz	kHz	535,1 kHz	38
11.15	FM-Bandbreite	520	FM×100	EXT	3,2 kHz	+3	10		dB	1 dB	39
11.16	FM-Klirrfaktor	520	FM×1	1kHz	3 kHz	+3	10		%	4 %	40
			FM×100						%		41
11.17	Impedanz	520	CW	-	-	0	-10	17 dB	dB		42
11.18	Strahlung	500	CW	-	-	+3	0		µV	1 µV	43

12. DESCRIPTION OF 'IEC- matching unit type 11728' (on request available accessories)

12.1. Operation and construction

The matching unit ensures obligatory nature between a bus and the signal generator type 1172nd Addressing the adjustment unit can change the frequency of the modulation and the damping can be programmed. Currency, the attenuation is programmed and the matching unit, especially in remote state, is the source learning of the signal generator's automatically transferred to the-120-dB position so connected to the test device currencies during programming no RF signal is fed, which the has an incorrect value exceeds permissible.

The block diagram of the device is included in figure 83.

Main units are the following:

I. Bus driver and bus receiver circuits
II. Message decoder
III. Separation stage
IV Data Decoder
V. Storage
VI. Gate and driver circuits

How the device due to the block diagram.

The coming of the IEC-bus addresses, coded messages and data take on the Bus receiver (I). If the matching unit is addressed, the after address incoming commands from the Message decoder (II received). The matching unit got into the news relevant states and also generates the signals of the handshake le Function (NDAS, NRFD). The input circuit are electrically isolated by the separating unit (III) from the other units.

The data decoder (IV) is the selection of the incoming data (frequency, modulation or divider data) and here are the clear and clock signals to the memory (V) generates

The serial incoming data arrive in a parallel form in the memory.

The unit VI tort the stored data. The programmed values can only go to the drivers-in converter or to the outputs when the matching unit is located in the remote state. This is set by the signal RL. While programming is part of the preparation as long as -120 dB, until the matching unit is in the divider programming and remote control position. This Torungsaufgabe is filled with the D signal. During the programming of the frequency of each previous frequency value is valid. The new value only after the arrival of E-letters get to the exit.

12.1.3. Detailed Description I.

Bus driver and bus receiver circuits function

The receiver and driver circuits consist of integrated circuits type MC 3441.

The level receiving lines are:

ATN
DAV

REN
EOI
IFC
as well as the levels which are because of the DIO-line.
Output lines:
NDAC
NRFD
and the output of one of the DIO lines level, showing mangled in the parallel query the state UNLOCK. The Parallel-Poll-Line assignment takes place here, with the help of the integrated circuits in type MC3141 P located gates (IC123, IC128) and the switch S2, S3.

II. Message Decoder
The decoder receives the voltage applied to the lines DIO
Level is determined and the internal states Flip-flops according to this one:
LA - addressed state (listerner address)
RL - remote state (remote-local)
LLO - a return to locally-controlled state ruled (local lock out)
the switch S5 RETURN TO LOCAL on the front panel is ineffective).
The state of flip-flops RL indicated by the LED D17. When lit, the matching unit is in remote state (REMOTE).It is state of the flip-flops LLO displayed by the LED D18. This lights when the pushbutton S5 RETURN TO LOCAL is ineffective. Programming is addressed in the state, regardless of the setting of the remote control (directive), when the matching unit is addressed, the LED lights ADDRESSED D19).
It is guaranteed by delays, that the matching unit on the bus until a receptivity to display the data is not written into the memory, if IC is connected have been 118 / 6 with IC 102 / 9, the delay is 300 ms, ie the matching unit will display at the new frequency setting of the value of any readiness to receive.

III. Separation stage
This level separates galvanically the bus receiver and driver circuits and the Message decoder from the other circuits using pulse transformers.

IV Data Decoder
The impulses of the separator can be a flip-flop .This flip-flop ever be put at the end of data acquisition from a common reset signal back to the ground state.
From the data received is determined by the logic (IC 235) determines whether the frequency, modulation, or the part of creation is to be programmed.
This is where some of the residue and clock signals of the memory (IC 228, IC 229).

V. Storage
The serial incoming data arrives in Parallel form to the store. The contents of the memory changes only when a new data input. When switching is provided by the RC C210-R201, that the modulation is "0"

(This code corresponds to the CW) and that the RL-flip flop sets the local operation.
The other stores have no predetermined state, they take on power to any state. The correct choice of programming steps can be avoided that the randomly generated state get to the outputs.
The correct choice of programming steps can be avoided that the randomly generated state get to the outputs.

VI. Gate and driver circuits
The data registered in the memory can only get to the output when the adjustment unit is in remote state. The choice between equity and remote control provides the RL function.
If the reprogramming of the divider in the remote condition occurs, the divider is automatically in the 120-dB position. Torungen This is done by the signal D.
The inverter driver are responsible for the copiers at the inputs of the signal generator located TTL Gate and the LEDs on the front panel, as the CMOS circuitry yet do not seem capable.

12.1.4. Mechanical design
The two interface cards are in a frame Aluminium bolted. The cover plate is held by another four screws. The matching unit can be mounted with screws on the back panel of the generator. To connect to the signal generator is a 64pin connector (P1 102) and for connection to the IEC-bus is a 25-pin connector (P1 101).
On the back panel are the address switch and the Switch of the parallel poll Line assignment, and the switch "1on".

12.2. General operating instructions
12 .2 .1. Commissioning
The matching unit is 4-screws on the rear panel of the signal generator to attach. The unit receives the supply voltages of the generator.
The connection to the IEC bus to be delivered through the connector "IEC BUS".

12.3. Preparation of commissioning

12.3.1. Function of the switch on the unit

12.3.1.1. Address Switches
With this switch, the address of the signal generator can be set in the measuring system.
A switch is on when the lever is in the down position. Warns the label (ON) at the counters "1PE" and "1ON out.

2.3.1.2. Parallel-Poll-line mapping
The condition of the UNLOCK signal generator is indicated by the matching unit that is placed on the selected DIO-line 0V.
(In the LOCK state is at this point, a voltage of +5 V)

If one wishes this level at one set of lines DI01-DI07, then at the counters of a number of DIO-line set of corresponding BCD code.
If one wishes to create this level to the line DI08, one must adjust 0t.
In these cases, there is the switch "ple" in the ON position.
If the state needs to be confirmed ÜNLOCK not to make the switch is "lpe" in the OFF position.

12.5.1.3. The switch "Ion" is used for local-set of the addressed state.
This is necessary if the signal generator should work with the IEC system played out in the end all data transmissions as a listener.

12.3.1.4. Example for setting the switch
The device is to have the address of 8 (in ASCII code: 056)
The matching unit is to be addressed by the IEC-bus can. (lon: OFF)
The state UNLOCK is displayed on DIO 6
These conditions the corresponding switch positions are shown in Figure 85.

12.5.2. Wiring of the connector of the device

12.3.2.1. Wiring of the connector IEC BUS

1.DIO1	13. SHIELD (Shielding)
2.DIO2	14. DIO 5
3.DIO3	15. DIO 6
4.DIO4	16. DIO 7
5.REN	17. DIO 8
6.EOI	18. GND
7.DAV	19. GND (6)
8.NRFD	20.GND (7)
9.NDAC	21.GND (8)
10.IFC	22.GND (9)
11.SRQ	23.GND
12.ATN	24.GND (11)
	25.GND (12)

The next points GND figures in brackets indicate the termination point, which is connected with the given ground conductor, twisted wire.

12.3.2.2. Wiring the 64 pin connector:

a1 - ADDRESSED LED
a2 - RETURN TO LOCAL LED
a3 - +5 V (INTERFACE)
a4 - REMOTE LED
a5 - RETURN TO LOCAL S5
a6 - RETURN TO LOCAL S5
a7 - UNLOCK
a8 - +8 V
a9 - NC
a10 - NC
a11 - -8 V
a12 - NC
a13 - -27 V
a14 - -18 V
a15 - NC
a16 - +27 V
a17 - +18 V
a18 - NC
a19 - +11 V
a20 - +7,3 V

c1 - MODE A
c2 - MODE B
c3 - ATT. -1 dB
c4 - -2
c5 - -4
c6 - -8
c7 - -10
c8 - -20
c9 - -40
c10 - -80 dB
c11 - NC
c12 - NC
c13 - +5 V (GENERATOR)
c14 - NC
c15 - NC
c16 - GND (GENERATOR)
c17 - NC
c18 - NC
c19 - REMOTE/LOCAL
c20 - NC

a21 - NC
a22 - 400 MHz
a23 - 200
a24 - 100
a25 - 80
a26 - 40
a27 - 20
a28 - 10
a29 - 8
a30 - 4
a31 - 2
a32 - 1 MHz

c21 - 800 kHz
c22 - 400
c23 - 200
c24 - 100
c25 - 80
c26 - 40
c27 - 20
c28 - 10
c29 - 8
c30 - 4
c31 - 2
c32 - 1 kHz

12.4. Instructions

12.1.1. Programming rule

Programming the frequency: FXXXXXX, where X = 0… 9 means kHz. The adjustable minimum frequency is 1000 kHz .

The adjustable maximum frequency is 520000 kHz (frequency of signal generator) programming of part creation: DXXX, where X = 0… 9 - dB means. The largest part of creation is selectable- 129 dB.

During the program the frequency and the need to create some meaningless zeros are not enrolled.

Programming the Modulation: GX, where X = 0, 1, 2, 3 can be.

Interpretations:
X = 0: CW
X = 1: AM
X= 2: FMx1
X =3: FMx100
So, if after switching the CW States is required, it need not be programmed separately. The programming is done in state-addressed and lasts from the appearance of the letters F, G, D as the data until the appearance of the letter E.

PROGRAMMING =

$$\left\{\left\{F \mid G \mid D\right\}_1 \left\{X\right\}_1^6\right\}_1^n \quad E$$

This means the following: First, take one of the letters F, G, D, and then follow the numbers (maximum 6). This can be several times (repeat n times). The letter E represents the end of programming.
When more letters entered as necessary, then the matching unit included in the frequency programming, the last six digits in the divisor programming, the last 3 digits, and setting the modulation, the last digit.

12.4.2. Example of the programming of the signal generator type 1172 of IEC-bus using the programmable table computer type 666B and IEC matching unit type 79843.
The compilation of the measurement system is shown in Fig 92.
The adjusted values should be the following:

Frequency	46500 kHz
Divisor position	-35 dB
Modulation	AM

To address the signal generator 1172 is the type of item corresponding ASCII codes (ø 56) are chosen.. After the device has been addressed as a listener, is to send him the following:
F 46 500 D 35 G 1 E.
Then the device is put into the remote state.

PROGRAM MODEL

PROGRAM SAMPLE

PC	Instruction	CODE	INTERPRETATIONS
0000	5	053	The start address of the data output (5) is loaded into the register Z
1	Z ↑	136	
2	PR.OUT	181	Output to the IEC-bus from the register Z i given up PC END CH
3	IF x=0	101	
4	END	190	ENDE
5	LOAD	176	Addressing listeners Address: 8
6	8	056	
7	TEST	177	
8	F	070	Frequency Programming
9	4	052	
0010	6	054	46 500 KHZ
1	5	053	
2	0	048	
3	0	048	
4	D	068	Divider programming -35dB
5	3	051	
6	5	053	
7	G	071	Programming the Modulation type: AM
8	1	049	
9	E	069	End of Programming

PC	Instruction	CODE	INTERPRETATION
0020	RECORD	178	Release of the remote state
1	LOAD	176	
2	8	056	
3	CL X	063	Addressing
4	END CH	011	End of data transmission

12.5. Service Statement

The unit should contribute to the repair of a properly equipped repair shop with knowledgeable professionals, the best in the repair shop of the plant to be transferred.

13. DESCRIPTION OF THE FREQUENCY DOUBLE Type 11729

13.1. Operation

The frequency double used a matched diodes quartet for double the frequency of the input signal. The quartet diodes (D1-4) is a HF-Graetz rectifier circuit. The diode is powered by a quartet broadband Symmetrical transformer (T1) with a ratio of 1:1. The DC circuit of the diodes is supplied by the serial link L1-R1. The capacitor C1 provides the DC isolation of the load. Since the doubly is a passive signal converter is minutes to ensure the technical data of an input power. +13dBm required.
The Doubly generates no noise. The spurious signal content of the output signal depends on the quality of the input signal. The unwanted harmonics can be eliminated with the aid of band pass filters.
In a frequency modulated input signal of the frequency deviation to the input signal with double the value will appear at the exit.

13.2. Use regulations

The Doubly is the output of the generator connected ..
The output level of the generator is 1V (+13dBm setting). The frequency of the output signal of the generator is set so that half of the desired (doubly) frequency is. The frequency may doubly min. 400 MHz max. 1040 MHz be.
To wish you an FM modulation set, press the button one or FMx1 FMx100 and press the button of the desired modulation frequency. The potentiometer LEVEL half of the corresponding stroke values is set. When you press the button VERNIER, he holds it with the help of a continuous frequency detuning LEVEL potentiometer (max. 1 MHz).
We wish to recruit an AM-modulation, then he shall present the output level of the generator to +10 dBm. The button must be pressed AM. The potentiometer LEVEL, the corresponding modulation level (maximum of 30% is set). A larger modulation depth increases, the distortion of the generator and the Verzweifachers and the power amplifier of the generator limits the output level (UNLEVELLED) .

13.3. Breakdowns and their solutions

In the presence of a malfunction, the two studs of the housing must be removed. Then, the housing can be removed. It is necessary, by measuring the resistance, whether the transformer T1 and the serial link L1-R1 are not defective.
The diodes can be considered only after they have been unsoldered. Each component can without removing the printed circuit board are unsoldered.
We use a soldering iron with low power and a fine tip.
The technical parameters can be tested on a spectrum analyzer. The analyzer must be at least one have functional area of 2 GHz .

14. STORAGE

That's according to the 5-1 point in said packed and bonded storage device under such conditions or to transport, consistent with the values listed below in accordance:

Ambient temperature:	25 ° C '... +55 ° C
Relative Humidity:	max. 98%
Pressure:	600 - 1060 mbar

Before any permanent storage of the device do not need protection to be taken. The unpacked after such a storage device is operational without further notice. If the device has been stored at a temperature below freezing, it will be before using appropriately placed in a transition airspace, where it is kept until the temperature balance.