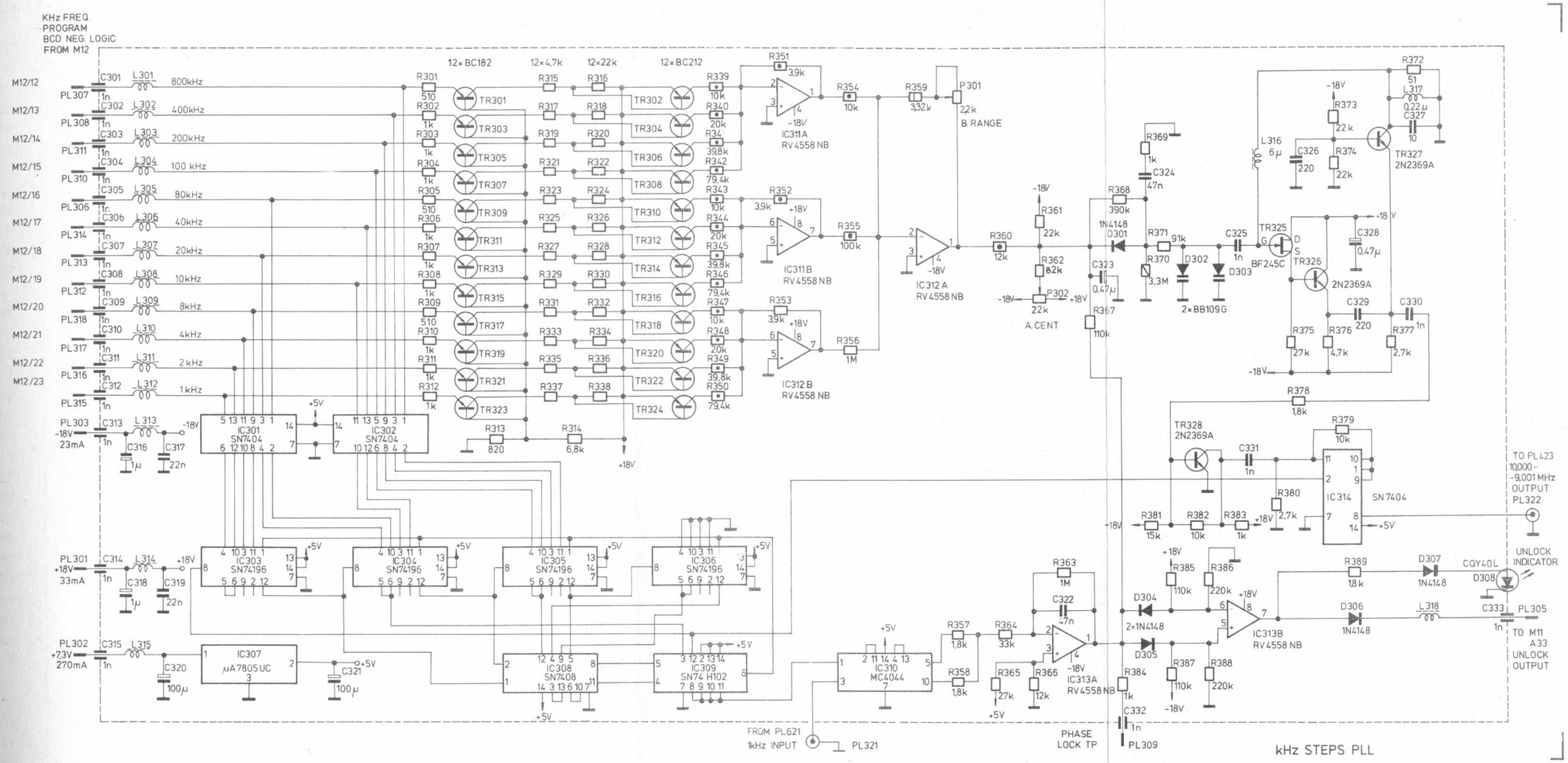
KHz FREQ. PROGRAM BCD NEG. LOGIC FROM M12
M12/12
M12/13
M12/14
M12/15
M12/16
M12/17
M12/18
M12/19
M12/20
M12/21
M12/22
M12/23
800kHz
400kHz
200kHz
100 kHz
80kHz
40kHz
20kHz
10kHz
8kHz
4kHz
2 kHz
1 kHz
12×BC182
12×4,7k
12×22k
12×BC212
IC311A RV4558 NB
IC311B RV4558 NB
IC312 A RV4558 NB
IC312 B RV4558 NB
B. RANGE
A. CENT
2×BB109G
BF245C
2N2369A
IC301 SN7404
IC302 SN7404
IC303 SN74196
IC304 SN74196
IC305 SN74196
IC306 SN74196
IC307 μA7805UC
IC308 SN7408
IC309 SN74 H102
IC310 MC4044
IC313A RV4558 NB
IC313B RV4558 NB
IC314 SN7404
TR328 2N2369A
TR327 2N2369A
TO PL423 10,000 - -9,001 MHz OUTPUT PL322
UNLOCK INDICATOR
CQY40L
TO M11 A33 UNLOCK OUTPUT
FROM PL621 1kHz INPUT
PL321
PHASE LOCK TP
PL309
PL303 -18V 23mA
PL301 +18V 33mA
PL302 +7,3V 270mA
kHz STEPS PLL

47
1172