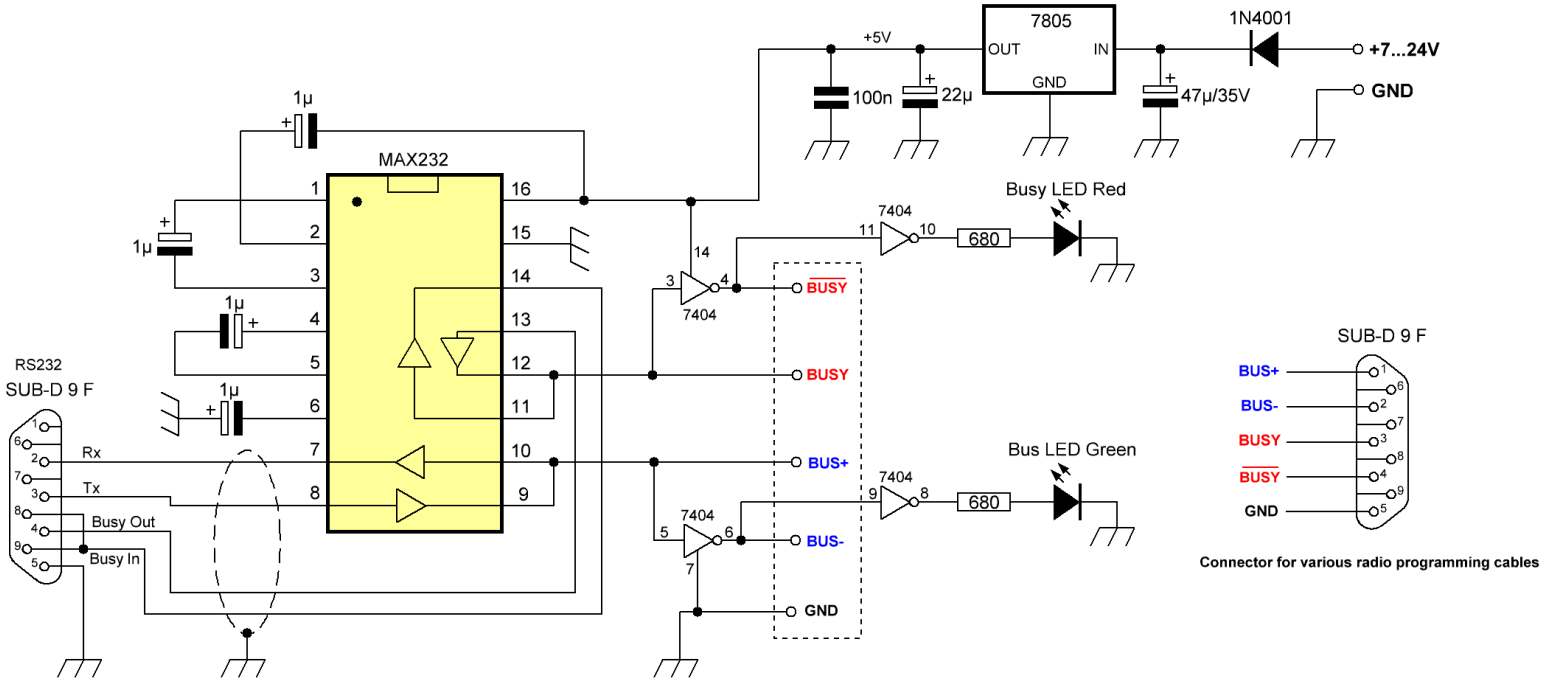

***Inverting gates are optional, only if the Radio use "BUS-" and "$\overline{\text{BUSY}}$" lines

***LEDs are ON during Bus/Busy inactivity (for power supply indication).

Radio Interface Box MOTOROLA

YO4HFU, rev 1.3/2019