TM 11-6625-3061-24P

TECHNICAL MANUAL

ORGANIZATIONAL, DIRECT SUPPORT, AND GENERAL SUPPORT MAINTENANCE REPAIR PARTS AND SPECIAL TOOLS LIST (INCLUDING DEPOT MAINTENANCE REPAIR PARTS AND SPECIAL TOOLS) FOR SPECTRUM ANALYZER 8558B (HP)

HEADQUARTERS, DEPARTMENT OF THE ARMY

9 OCTOBER 1984

Technical Manual

No. 11-6625-3061-24P

TM 11-6625-3061-24P
HEADQUARTERS
DEPARTMENT OF THE ARMY
Washington, DC, 9 October 1984

ORGANIZATIONAL, DIRECT SUPPORT, AND GENERAL SUPPORT MAINTENANCE REPAIR PARTS AND SPECIAL TOOLS LIST (INCLUDING DEPOT MAINTENANCE REPAIR PARTS AND SPECIAL TOOLS) FOR SPECTRUM ANALYZER 8558B (HP)

Current as of 29 June 1984

REPORTING ERRORS AND RECOMMENDING IMPROVEMENTS

You can help improve this manual. If you find any mistakes or if you know of a way to improve the procedures, please let us know. Mail your letter, DA Form 2028 (Recommended Changes to Publications and Blank Forms) DA Form 202&2 located in the back of this manual direct to: Commander, US Army Communications-Electronics Command and Fort Monmouth, ATTN: DRSEIME-MP, Fort Monmouth, NJ 07703-5007. In either case, a reply will be furnished direct to you.

TABLE OF CONTENTS

			Page	llus Figure
Section	I.	Introduction	1	
	II.	Repair Parts List	5	’
Group	00	Spectrum Analyzer 8558B (HP)	5	1
	01	Front Switch Assy 08558-60100 A2	7	2
	02	First Converter Assy 08558-60004	9	3
	03	Second Converter Assy 08558-60097 A5	1	4
	04	Step Gain Assy 08558-60012 A12	13	5
Section	III.	Special Tools List (Not applicable)		
	IV.	National Stock Number and Part Number Index	14	

SECTION I
INTRODUCTION

1. Scope

This manual lists spares and repair parts; Special Tools ;special test, measurement, and diagnostic equipment (TMDE), and other special support equipment required for performance of direct support and general support maintenance of the 8558B (HP). It authorizes the requisitioning and issue of spares and repair parts as indicated by the source and maintenance codes.

2. General

This Repair Parts and Special Tools List is divided into the following sections:

a. Section II. Repair Parts List. A list of spares and repair parts authorized for use in the performance of maintenance. The list also includes parts which must be removed for replacement of the authorized parts. Parts lists are composed of functional groups in numeric sequence, with the parts in each group listed in figure and item number sequence.

b. Section III. Special Tools List. Not applicable.

c. Section IV. National Stock Number and Part Number Index. A list, in National item identification number (NIIN) sequence, of all National stock numbers (NSN) appearing in the listings, followed by a list, in alphameric sequence, of all part numbers appearing in the listings. National stock numbers and part numbers- are cross-referenced to each illustration figur3 ;and item number appearance.

3. Explanation of Columns

a. Illustration. This column is divided as follows:

(1) Figure Number. Indicates the figure number of the illustration on which the item is shown.

(2) Item Number. The number used to identify item called out in the illustration.

b. Source, Maintenance, and Recoverability (SMR) Codes.

(1) Source code. Source codes indicate the manner of acquiring support items for maintenance, repair, or overhaul of end items. Source codes are entered in the first and second positions of the Uniform SMR Code format as follows:

Code Definition

PA - Item procured and stocked for anticipated or known usage.

NOTE

Cannibalization or salvage may be used as a source of supply for any items source coded above except those coded XA and aircraft support items as restricted by AR 750-1.

(2) Maintenance code. Maintenance codes are assigned to indicate the levels of maintenance authorized to USE and REPAIR support items. The maintenance codes are entered in the third and fourth positions of the Uniform SMR Code format as follows:

(a) The maintenance code entered in the third position will indicate the lowest maintenance level authorized to remove, replace, and use the support item. The maintenance code entered in the third poison will indicate one of the following levels of maintenance:

Code Application/Explanation

H - Support item is removed, replaced, used at the general support level.

D - Support items that are removed, replaced, used atdepot, mobile depot, specialized repair activity only.

(b) The maintenance code entered in the fourth position indicates whether the item is to be repaired and identifies the lowest maintenance level with the capability to perform complete repair (i.e., all authorized maintenance functions). This position will contain one of the following maintenance codes:

Code Application/Explanation

D - The lowest maintenance level capable of complete repair of the support is the depot level.

Z - Nonreparable. No repair is authorized.

(3) Recoverability code. Recoverability codes are assigned to support items to indicate the disposition action on serviceable items. The recoverability code is entered in the fifth position of the Uniform SMR Code format as follows:

Recoverability codes Definition

Z - Nonreparable item. When unserviceable, condemn and dispose at the level indicated in position 3.

D - Reparable item. When beyond lower level repair capability, return to depot. Condemnation and disposal not authorized below depot level.

A - Item requires special handling or condemnation procedures because of specific reasons (i.e., precious metal content, high dollar value, critical material or hazardous material). Refer to appropriate manuals/directives for specific instructions.

c. National Stock Number. Indicates the National stock number assigned to the item and will be used for requisitiontng purposes.

d. Federal Supply Code for Manufacturer (FSCM). The FSCM is a 5-digit numeric code listed in SB 708-41/42 which is used to identify the manufacturer, distributor, or Government agency, etc.

e. Part Number. Indicates the primary number used by the manufacturer (individual, company, firm, corporation, or Government activity), which controls the design and characteristics of the item by m,'eans of its engineering drawings, specifications, standards, and inspection requirements to identify an item or range of items.

NOTE

When a stock numbered item is requisitioned, the repair part received may have a different part number than the part being replaced

f. Description. Indicates the Federal item name and if required, a minimum description to identify the item.
g. Unit of Measure (U/M). Indicates the standard of basic quantity of the listed item as used in performing the actual maintenance function. This measure is. expressed by a two-character alphabetical abbreviation This is necessary since illustrations are prepared for (e.g., ea, in, pr, etc). When the unit of measure differs from the unit of issue, the lowest unit of issue that will satisfy the required units of measure will be requisitioned
h. Quantity Incorporated in Unit. Indicates the quantities of the item used in the breakout

4. Special Information

a. The following publications pertain to the 8558B and its components:
TM 11-6625-3061-14, Spectrum Analyzer 85588 (HP)
b. National stock numbers (NSN's) that are missing from P source coded items have been applied for and will be added to this TM by future change/revision when. they are entered in the Army Master Data File (AMDF). Until the NSN's are established and published, submit exception requisitions to: Commander, US Army Com. munications - Electronics Command and Fort Mon-mouth, ATT: DRSEL-MM, Fort Monmouth, New Jersey 07703-5007 for the part required to support your equipment.

5. How to Locate Repair Parts

a. When National stock number is unknown.
(1) First. Using the table of contents, determine the functional group within which the item belongs.
(2) Second. Find the illustration covering the functional group to which the item belongs.
(3) Third. Identity the item on the illustration and note the illustration figure and item number of the item.
(4) Fourth. Using the Repair Parts Listing, find the figure and item number noted on the illustration.
b. When the National stock number or part number is known.
(1)First. Using the Index of National Stock Numbers and Part Numbers, find the pertinent National Stock number or part number. This index is in NIIN sequence followed by a list of part numbers in alphanumeric sequence, cross-referenced to the illustration figure number and item number.
(2)Second. After finding the figure and item number locate the figure and item number in the repair parts list.

6. Abbreviations

Not applicable.

(Next printed page is 4.1)

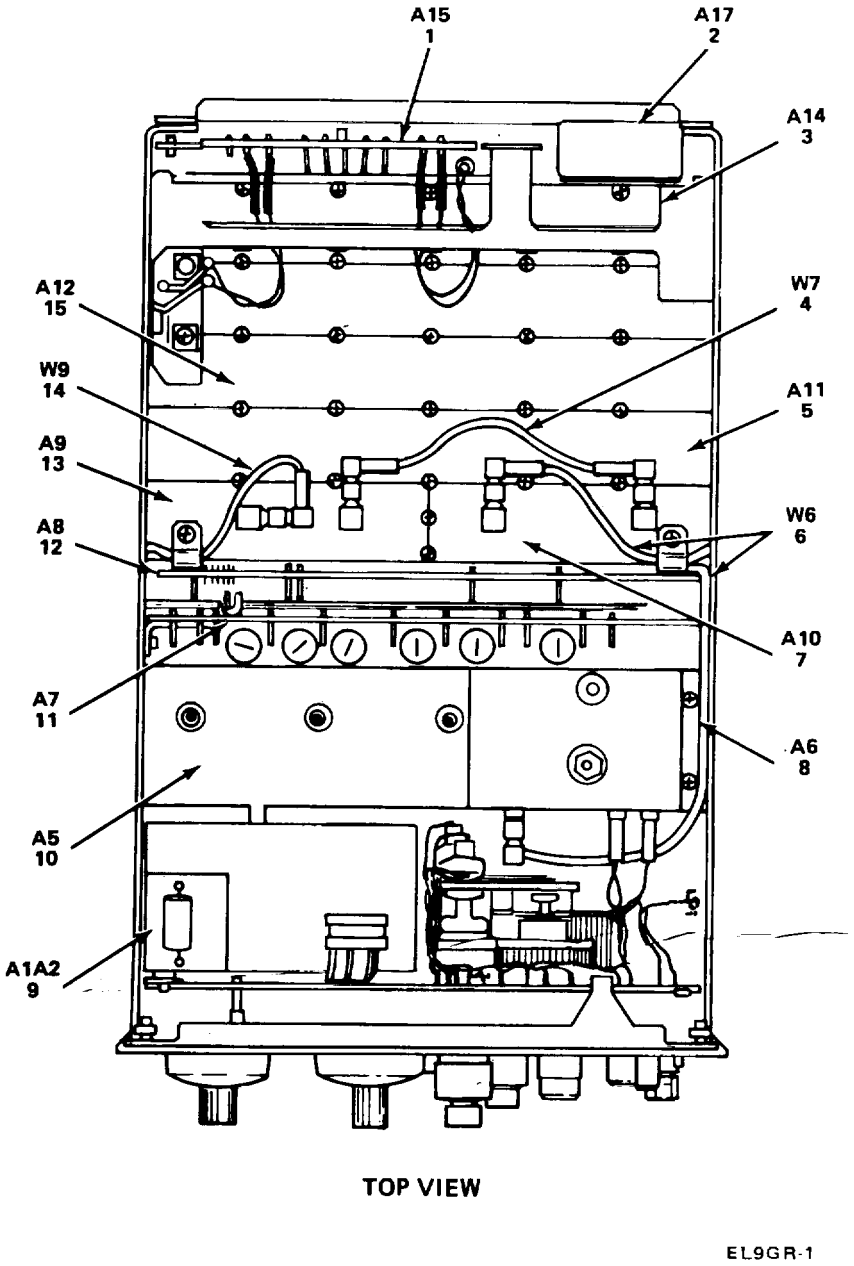

Figure 1. Spectrum Analyzer, 8558B (HP) (Sheet 1 of 2)

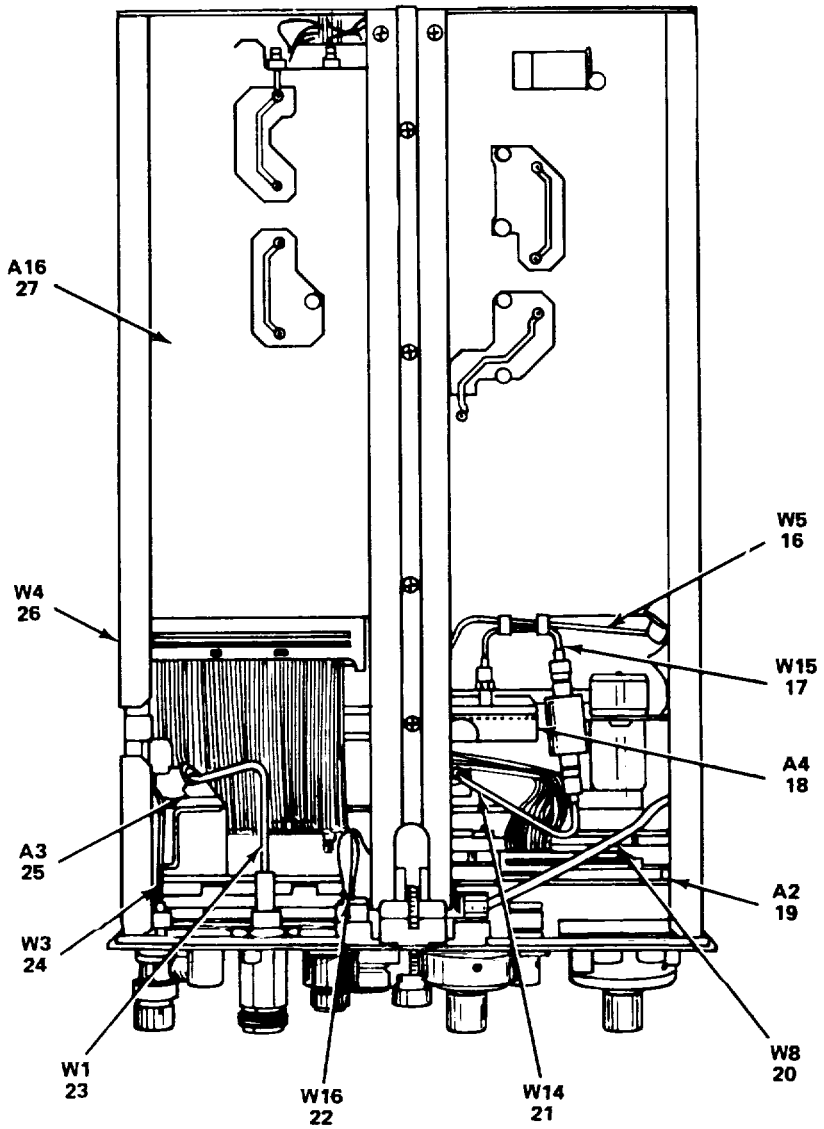

Figure 1. Spectrum Analyzer, 8558B (HP) (Sheet 2 of 2)

(1) ILLUSTRATION (a) FIG NO.	(b) ITEM NO.	(2) SMR CODE	(3) NATIONAL STOCK NUMBER	(4) FSCM	(5) PART NUMBER	(6) DESCRIPTION USABLE ON CODE	(7) U/M	(8) QTY INC IN UNIT
						GROUP 00 SPECTRUM ANALYZER 85588 IHP)		
1	1	PAHZZ	5999-01-167-8968	28480	08558-60015	CIRCUIT CARD ASSENB	EA	1
1	2	PAHZZ	5999-01-167-8969	28480	08558-60035	CIRCUIT CARD ASSEMB	EA	1
1	3	PAHDD		28480	5061-5411	CIRCUIT CARD ASSE8.	EA	1
1	4	PADZZ		28480	08558-60048	CABLE ASSEMBLY	EA	1
1	5	PAHDD	6625-01-164-6802	28480	08559-60058	CIRCUIT CARD ASSEMB	EA	2
1	6	PAHZZ		28480	08558-60047	CABLE ASSEMBLY.	EA	1
1	7	PAHZZ	6625-01-168-6518	28480	08558-60010	CIRCUIT CARD ASSEMB	EA	1
1	8	PAHZZ	5955-01-167-6039	28480	5086-7080	OSCILLATOR	EA	1
1	9	PAHZZ	6625-01-168-5854	28480	08558-60125	DRIVER ASSEMBRLY.	EA	1
1	10	PAHDD	6625-01-164-6668	28480	08558-60097	CONVERTER	EA	I
1	11	PAHZZ	5999-01-167-8965	28480	08558-60126	CIRCUIT CARD ASSEMB	EA	1
1	12	PAHZZ	5999-01-167-8966	28480	08558-60153	CIRCUIT CARD ASSEMB	EA	1
1	13	PAHDD	6625-01-164-0571	28480	08558-60154	CIRCUIT CARD ASSEB	EA	1
1	14	PAHZZ		28480	08R558-60045	CABLE ASSEMBLY	EA	1
1	15	PAHZZ	5999-01-167-8967	28480	08558-60012	CIRCUIT CARD ASSEMB	EA	1
1	16	PAHZZ		28480	08558-20073	CABLE ASSEMBLY	EA	1
1	17	PAHZZ		28480	08558-20116	CABLE ASSEMBLY	EA	1
1	18	PAHDD	6625-01-164-0532	28480	08558-60004	CONVERTER	EA	1
1	19	PAHDD	6625-01-171-9863	28480	08558-60100	SWITCH ASSEMBLY	EA	1
1	20	PAHZZ		28480	08558-60046	CABLE ASSEMBLY. .	EA	1
1	21	PAHZZ		28480	0855R-20117	CABLE ASSEMBLY	EA	1
1	22	PAHZZ		28480	08558-60170	CABLE ASSEMBLY	EA	1
1	23	PAHZZ		28480	08558-60038	CABLE ASSEMBLY	EA	1
1	24	PAHZZ		28480	08558-20071	CABLE ASSEMBLY	EA	1
1	25	PAHZZ		28480	08495-60004	ATTENUATOR	EA	1
1	26	PAHZZ		28480	08558-20090	CABLE ASSEMBLY	EA	1
1	27	PAHDD	6625-01-164-0513	28480	08558-65159	BACKPLANE ASSEMBLY	EA	1

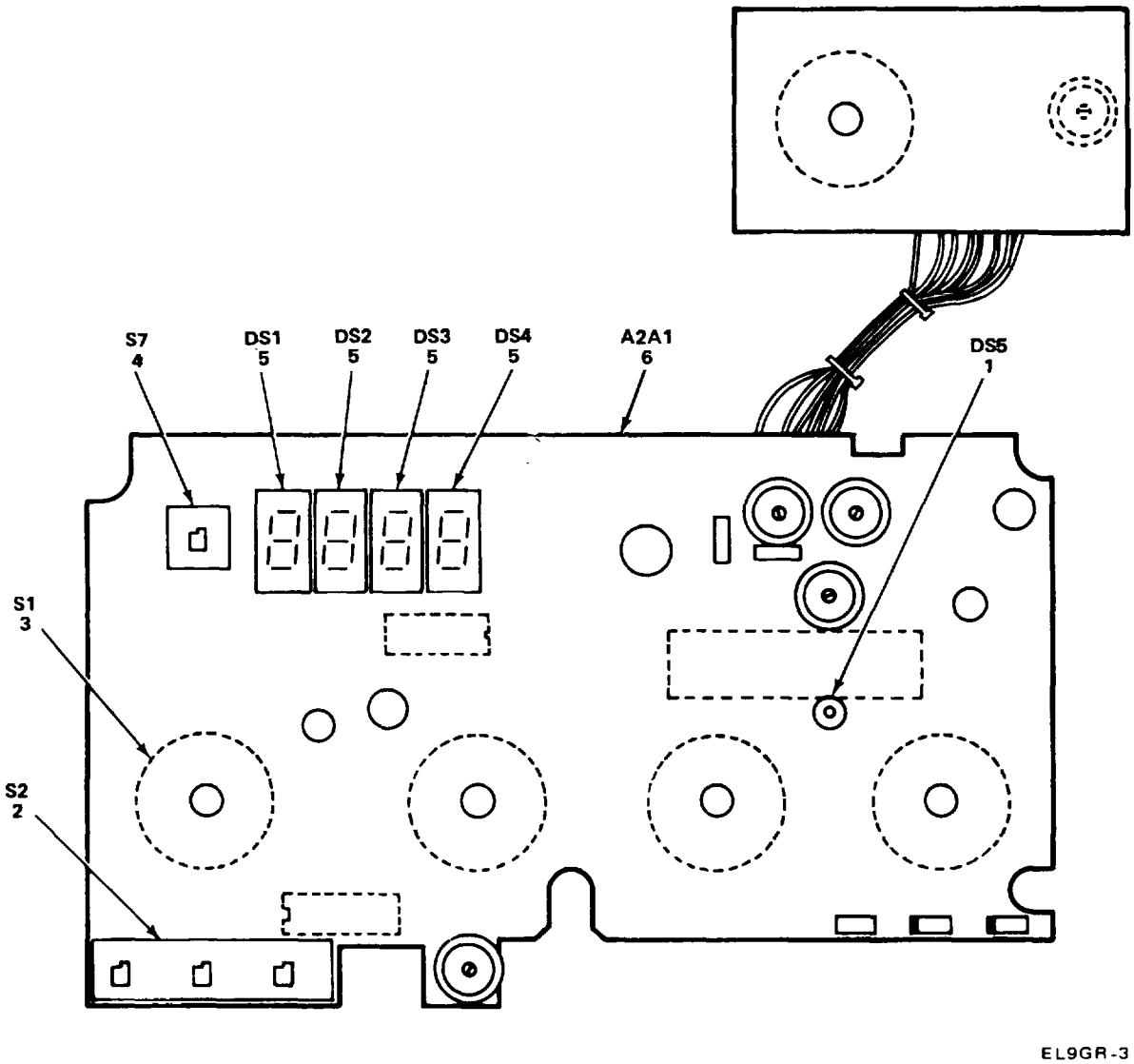

Figure 2. Front Switch Assembly, 08558-60100, A2

(1) ILLUSTRATION (a) FIG NO.	(b) ITEM NO.	(2) SMR CODE	(3) NATIONAL STOCK NUMBER	(4) FSCM	(5) PART NUMBER	(6) DESCRIPTION USABLE ON CODE	(7) U/M	(8) QTY INC IN UNIT
						GROUP 01 FRONT SWITCH ASSY 08558-60100 A2		
2	1	PADZZ	5961-01-049-6785	28480	1990-0485	LIGHT EMITTING DIOD.....	EA	2
2	2	PADZZ	5930-01-168-7592	28480	3101-2213	SWITCH,PUSH	EA	1
2	3	PADZZ	5930-00-917-9619	28480	3101-3044	SWITCH,PUSH	EA	1
2	4	PADZA	5930-01-142-0395	28480	3101-2124	SWITCHPUSH	EA	1
2	5	PADZZ	5850-01-164-0568	28480	1990-0619	LENS,LIGHT	EA	8
2	6	PADZZ	6625-01-168-5855	28480	08558-60160	SWITCH BOARD ASSEMB	EA	1

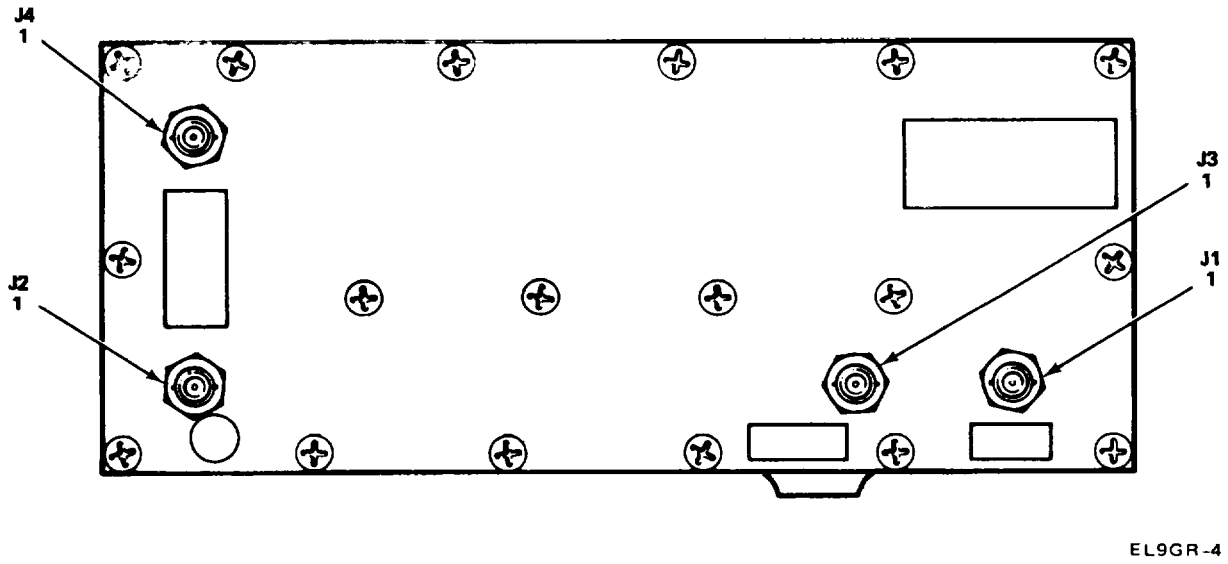

Figure 3. First Converter, 08558-60004, A4

(1) ILLUSTRATION (a) FIG NO.	(b) ITEM NO.	(2) SMR CODE	(3) NATIONAL STOCK NUMBER	(4) FSCM	(5) PART NUMBER	(6) DESCRIPTION USABLE ON CODE	(7) U/M	(8) QTY INC IN UNIT
						GROUP 02 FIRST CONVERTER ASSY 08558-6000 A4		
3	1	PADZZ	5935-00-193-1965	26805	2056-000-00 9	CONNECTOR	EA	1

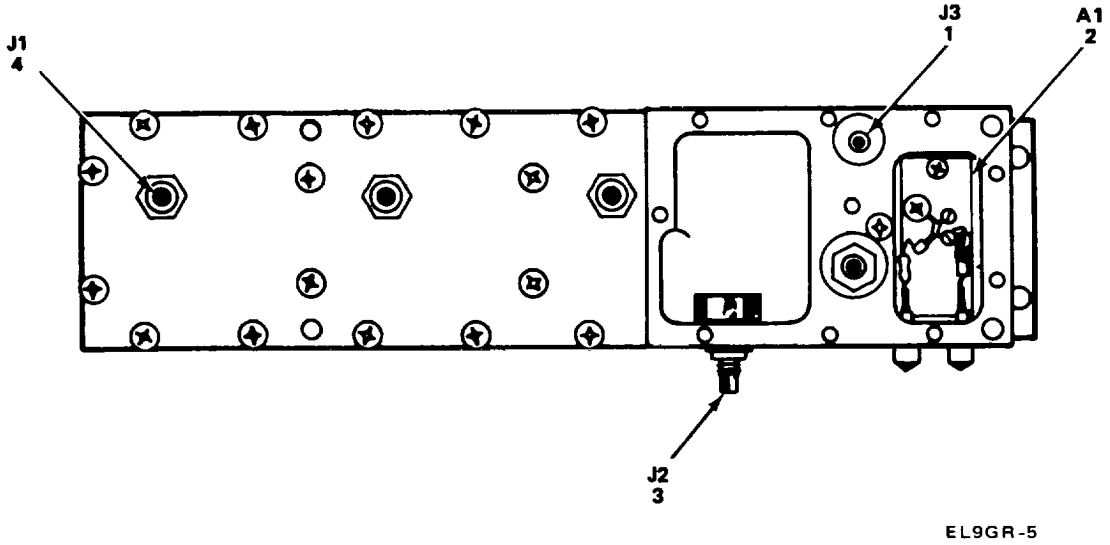

Figure 4. Second Converter, 08558-60097, A5

(1) ILLUSTRATION (a) FIG NO.	(b) ITEM NO.	(2) SMR CODE	(3) NATIONAL STOCK NUMBER	(4) FSCM	(5) PART NUMBER	(6) DESCRIPTION USABLE ON CODE	(7) U/M	(8) QTY INC IN UNIT
						GROUP 03 SECOND CONVERTER ASSY		
						00558-60097 AS		
4	1	PADZZ	5935-00-428-2944	28480	1250-0829	CONNECTOR.RECEPTACL.....	EA	1
4	2	PADZZ		28480	08558-60028	OSCILLATOR	EA	1
4	3	PADZZ	5935-01-082-1967	28480	1250-1435	CONNECTOR.RECEPTACL.....	EA	1
4	4	PADZZ	5935-00-498-1957	26805	2058-5029-00	CONNECTOR	EA	1

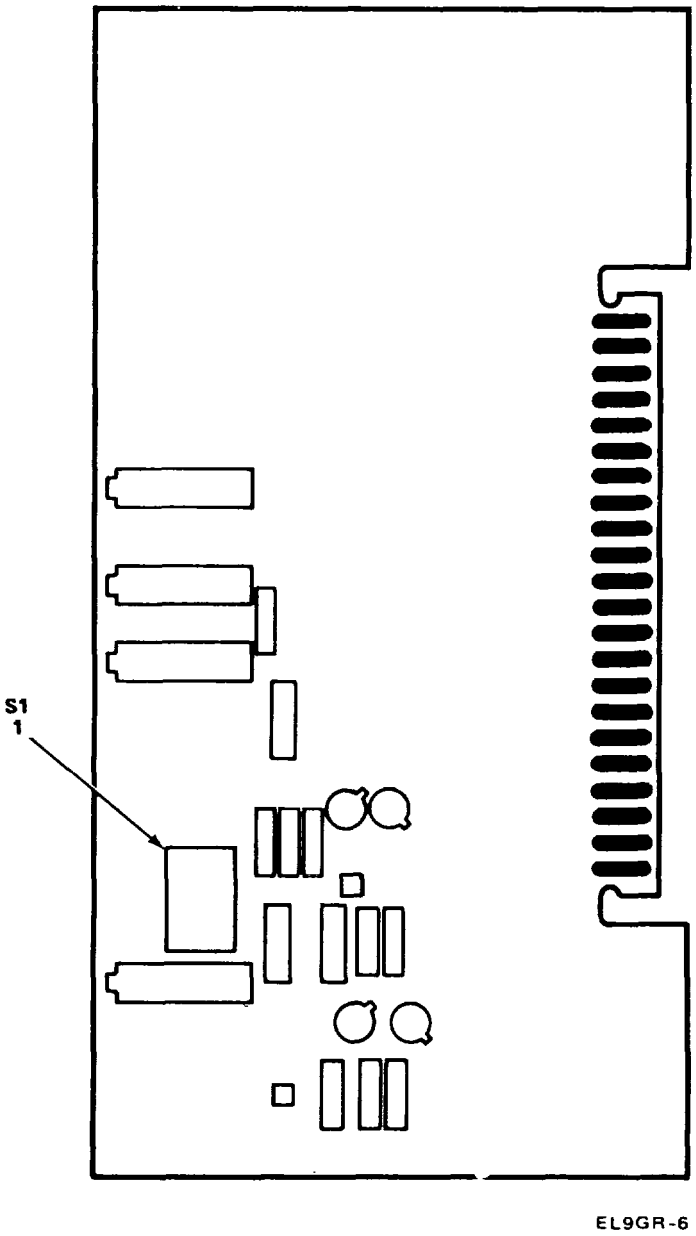

Figure 5. Step Gain Assembly, 08558-60012, A12

(1) ILLUSTRATION (a) FIG NO.	(b) ITEM NO.	(2) SMR CODE	(3) NATIONAL STOCK NUMBER	(4) FSCM	(5) PART NUMBER	(6) DESCRIPTION USABLE ON CODE	(7) U/M	(8) QTY INC IN UNIT
5	1	PADZZ	5930-D0-412-0939	28480	3101-0973	GROUP 04 STEP GAIN ASSY 08558-60012 I12 SWITCH,SLIDE	EA	1

NATIONAL STOCK NUMBER AND PART NUMBER INDEX

STOCK NUMBER	FIG.	ITEM	STOCK NUMBER	FIG.	ITEM
5935-00-193-t965	3	1	6625-01-164-6802	1	5
5930-00-412-0939	5	1	5955-01-167-6039	1	8
5935-00-428-2944	4	1	5999-01-167-8965	1	11
5935-00-498-1957	4	4	5999-01-167-8966	1	12
5930-00-917-9619	2	3	5999-01-L67-8967	1	15
5961-01-049-6785	2	1	5999-01-167-8968	1	1
5935-01-082-1967	4	3	5999-01-167-8969	I	2
5930-01-142-0395	2	4	6625-01-L168-5854	1	9
6625-01-164-0532	1	18	6625-01-168-5855	2	6
6625-01-164-0533	1	27	6625-01-168-6518	1	7
5850-01-164-0568	2	5	5930-01-168-7592	2	2
6625-01-164-0571	1	13	6625-01-171-9863	1	19
6625-01-164-6668	1	10			

FSCM	PART NUMBER	FIGURE NO.	ITEM NO.	FSCM	PART NUMBER	FIGURE NO.	ITEM NO.
28480	08495-60004	1	25	28480	08558-60126	1	11
28480	08558-20071	1	24	28480	08559-60153	1	12
28480	08558-20073	1	16	28480	08558-60154	1	13
28480	08558-20090	1	26	28480	08558-60160	2	6
28480	08558-20116	1	17	28480	08558-60170	1	22
28480	08558-20117	1	21	28480	08558-65159	1	27
28480	08558-60004	1	18	28480	08559-60058	1	5
29480	08558-60010	1	7	28480	1250-0829	4	1
28480	08558-60012	1	15	28480	1250-1435	4	3
78480	08558-60015	1	1	28480	1990-0485	2	1
28480	08558-60028	4	2	28480	[990-0619	2	5
29480	08558-60035	1	2	26805	2056-0000-00	3	1
28480	08558-60038	1	23	26805	2058-5029-00	4	4
27480	08558-60045	1	14	28480	1101-0044	2	3
28480	01558-60046	1	20	28480	3101-0973	5	1
29480	08558-60347	1	6	28480	3101-2124	2	4
28480	08558-60048	1	4	28480	3101-2213	2	2
28480	08558-60097	1	10	28480	5061-5411	1	3
28480	08558-60100	1	19	28480	5086-7080	1	8
28480	08558-60125	1	9				

By Order of the Secretary of the Army:

JOHN A. WICKHAM JR.
General, United Stales Army
Chief of Staff

Official:

ROBERT M. JOYCE
Major General, United States Army
The Adjutant General

Distribution:

To be distributed in accordance with special list.

TEAR ALONG PERFORATED LINE

RECOMMENDED CHANGES TO EQUIPMENT TECHNICAL PUBLICATIONS

SOMETHING WRONG WITH THIS PUBLICATION?

FROM: (PRINT YOUR UNIT'S COMPLETE ADDRESS)

DATE SENT

PUBLICATION NUMBER	PUBLICATION DATE	PUBLICATION TITLE
TM 11-5825-270-10	23 Jul 81	Radio Frequency R-2176/FRN

BE EXACT. . .PIN-POINT WHERE IT IS

PAGE NO.	PARA-GRAPH	FIGURE NO	TABLE NO.	IN THIS SPACE TELL WHAT IS WRONG AND WHAT SHOULD BE DONE ABOUT IT:

PRINTED NAME, GRADE OR TITLE, AND TELEPHONE NUMBER

SIGN HERE:

DA FORM 1 JUL 79 2028-2

PREVIOUS EDITIONS ARE OBSOLETE.

P.S.—IF YOUR OUTFIT WANTS TO KNOW ABOUT YOUR RECOMMENDATION MAKE A CARBON COPY OF THIS AND GIVE IT TO YOUR HEADQUARTERS.

PIN: 056446-000