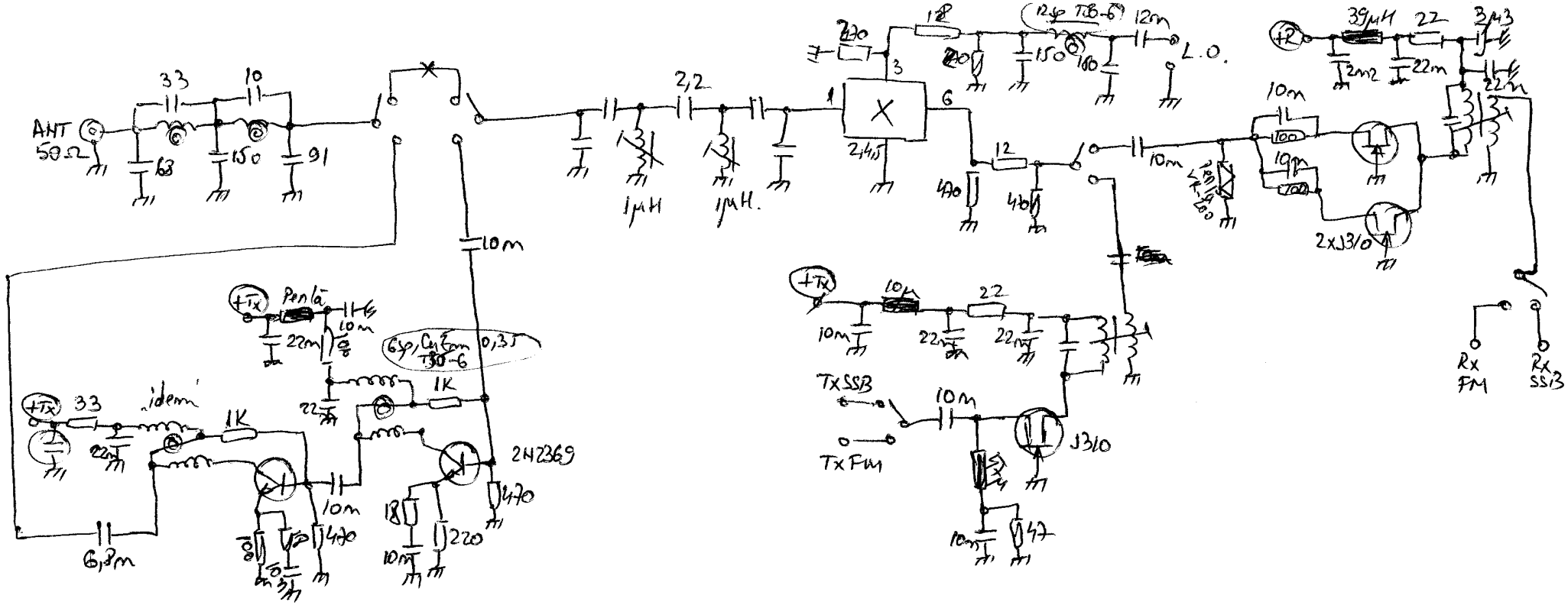
ANT
50Ω
33
10
68
150
91
10m
1μH
1μH.
2,2
X
2,4,5
1
6
3
220
18
150
160
12m
L.O.
12
470
470
10m
2x J310
39μH
22
3μ3
22m
22m
22m
+12
+Tx
Penta
10m
22m
6φ, Cu 5m T30-6
0,35
1K
22
33
idem
1K
22
2N2369
10m
470
470
18
220
10m
6,8m
10μ
22
10m
22m
22m
TxSSB
TxFM
10m
J310
10m
47
Rx FM
Rx SSB

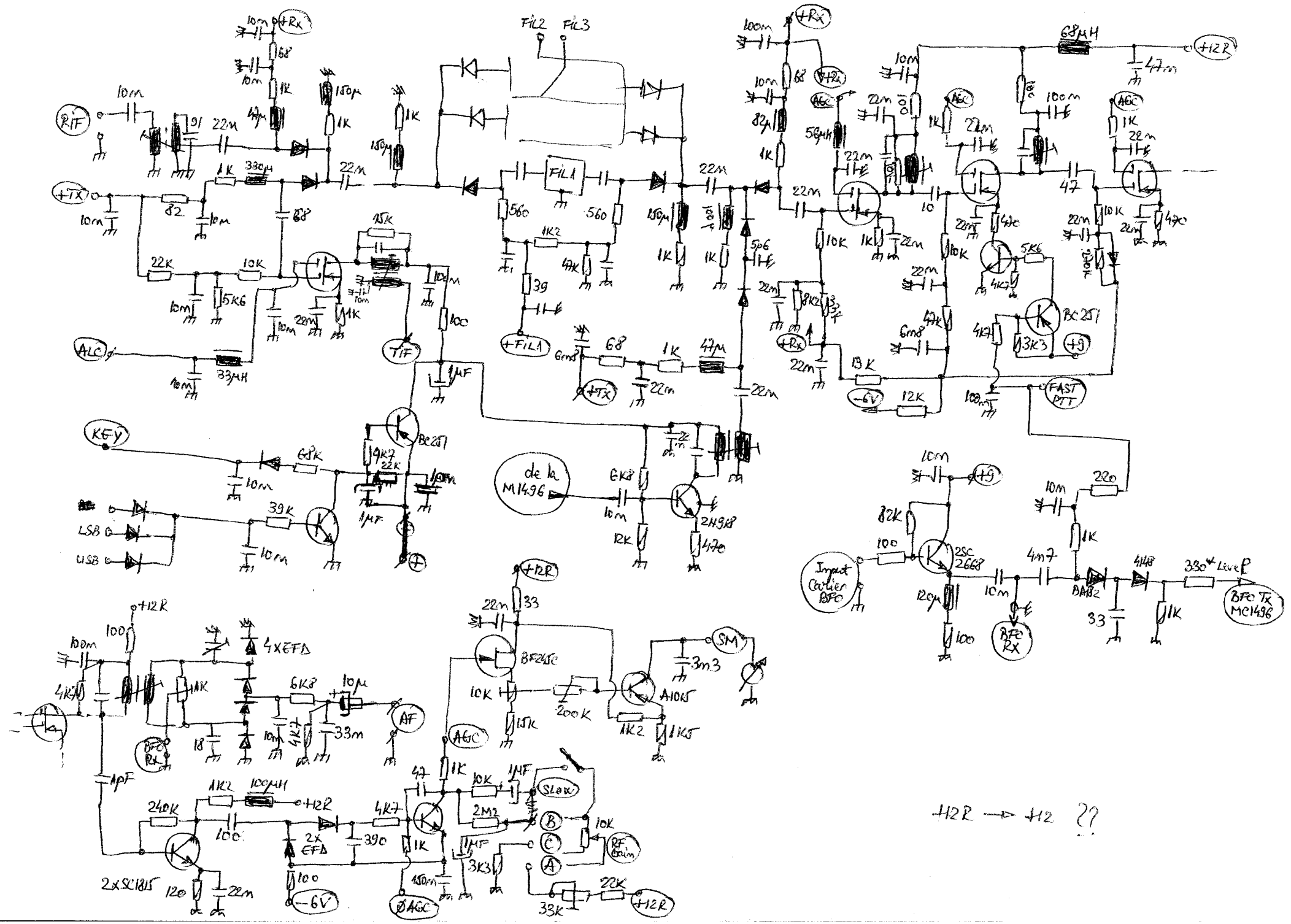
FIL2
FIL3
FIL1
+RX
+12R
+TX
RIF
ALC
TIF
KEY
LSB
USB
AGC
FAST PTT
+9
de la M1496
Impact Cartier BFO
BFO RX
BFO TX MC1496
Level
AF
SM
SLOW
RF Gain
4XEFA
2XEFA
2xSC1815
BF245C
A1015
BC251
2N918
2SC2668
BAB2
+12R → +12 ??

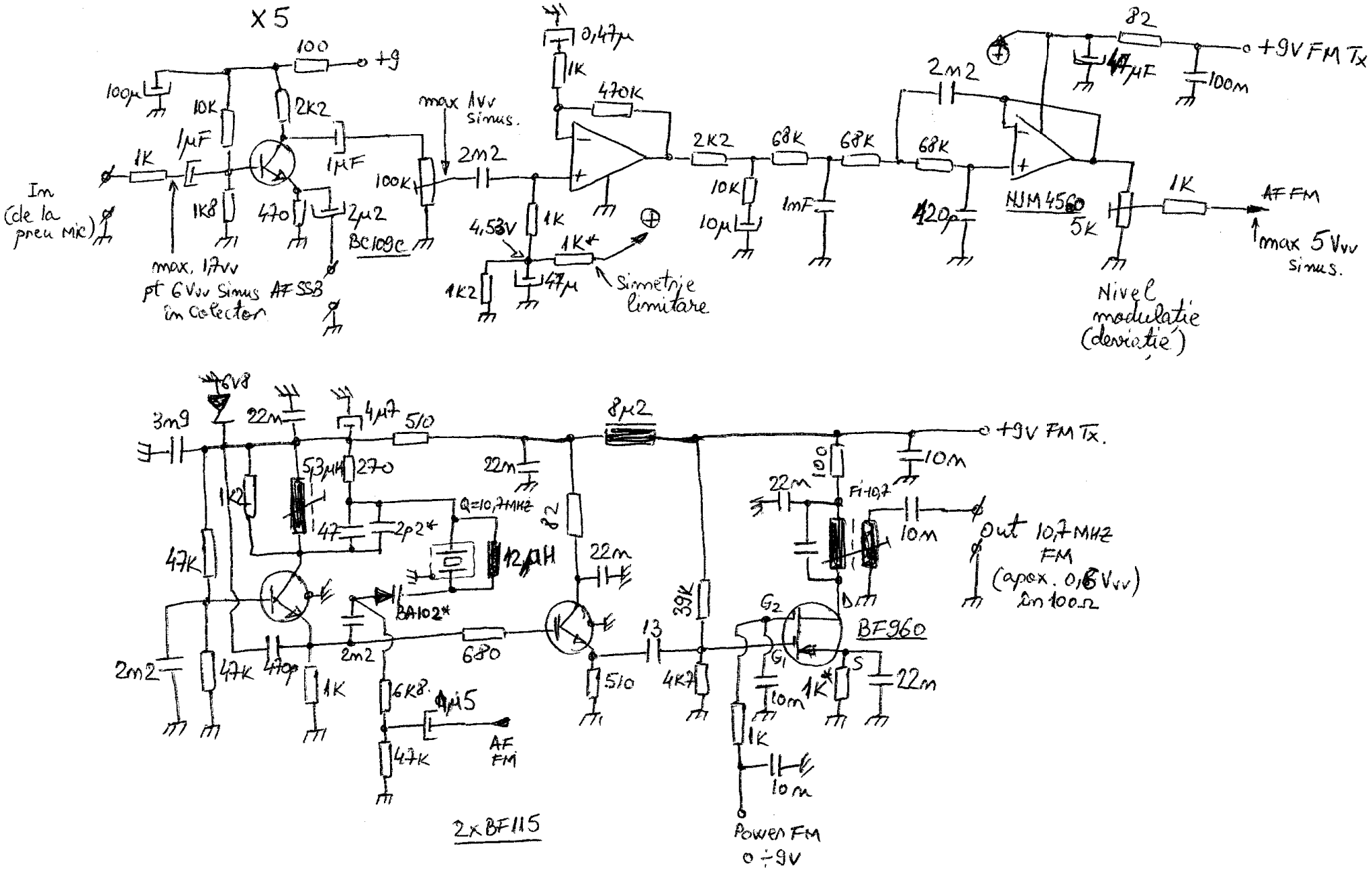
X5
100
+9
100µ
10K
2K2
1µF
1µF
1K
In (de la preu MK)
1K8
470
2µ2
BC109C
max. 1,7Vv pt 6Vvv Sinus AF SSB în Colector
max 1Vv sinus.
100K
2n2
0,47µ
1K
470K
4,53V
1K
1K*
47µ
1K2
Simetrie limitare
2K2
68K
68K
10K
10µ
1nF
2n2
68K
420p
NJM4560
82
+9V FM Tx
47µF
100n
5K
1K
AF FM
max 5Vvv sinus.
Nivel modulatie (deviatie)
6V8
3n9
22n
4µ7
510
8µ2
+9V FM Tx.
53µH
270
22n
Q=10,7MHz
47
2p2*
12µH
1K2
47K
BA102*
2n2
680
82
22n
39K
13
4K7
510
2n2
47K
470p
1K
6K8
4µ5
AF FM
47K
2x BF115
100
10n
22n
Fi=10,7
10n
out 10,7MHz FM (apox. 0,6Vvv în 100Ω
G2
G1
S
BF960
1K*
22n
10n
1K
10n
Power FM 0÷9V

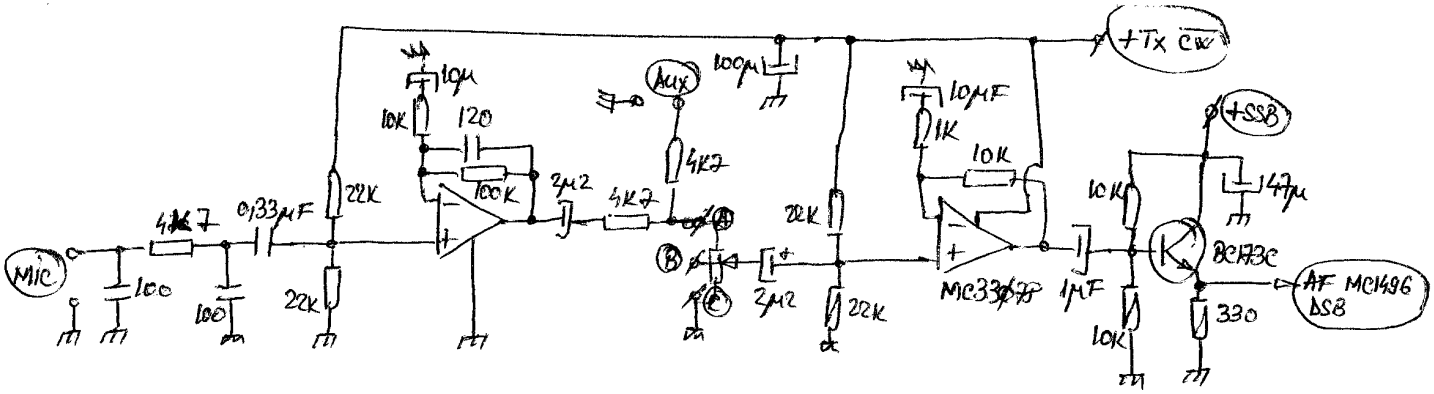
MIC
4K7
100
0,33µF
22K
10µ
10K
120
100K
2µ2
4K7
Aux
100µ
+Tx cw
10µF
1K
10K
22K
MC3302
1µF
10K
BC173C
330
+SSB
47µ
AF MC1496 DSB

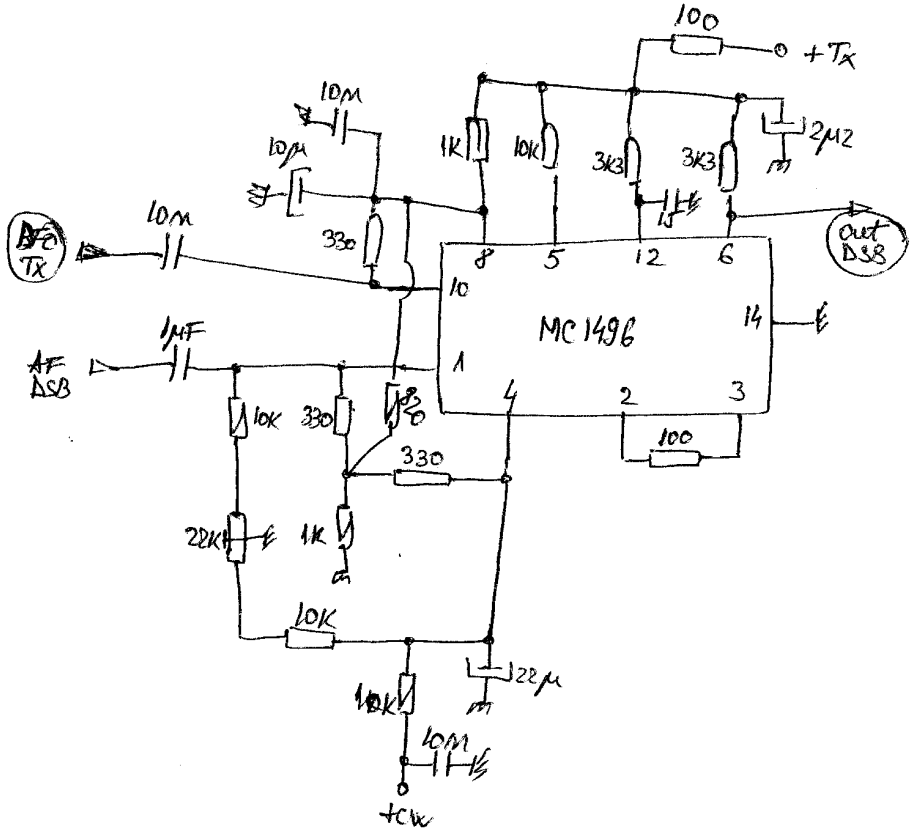
100
+Tx
10M
10µ
1K
10K
3K3
3K3
2µ2
1µ
out DSB
Tx
330
MC 1496
1µF
AF DSB
10K
330
330
22K
1K
10K
22µ
10K
10M
+cw

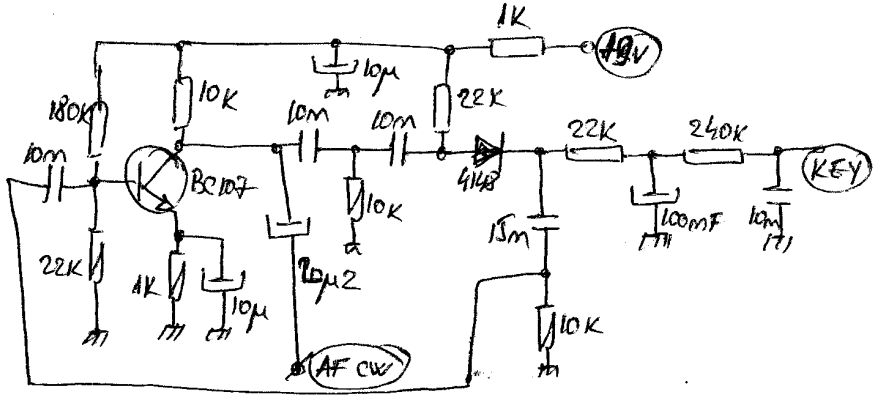
1K
+9V
10µ
180K
10K
10M
10M
22K
10M
BC107
4148
22K
240K
KEY
100mF
10M
22K
1K
10µ
10µ2
10K
15m
10K
AF cw

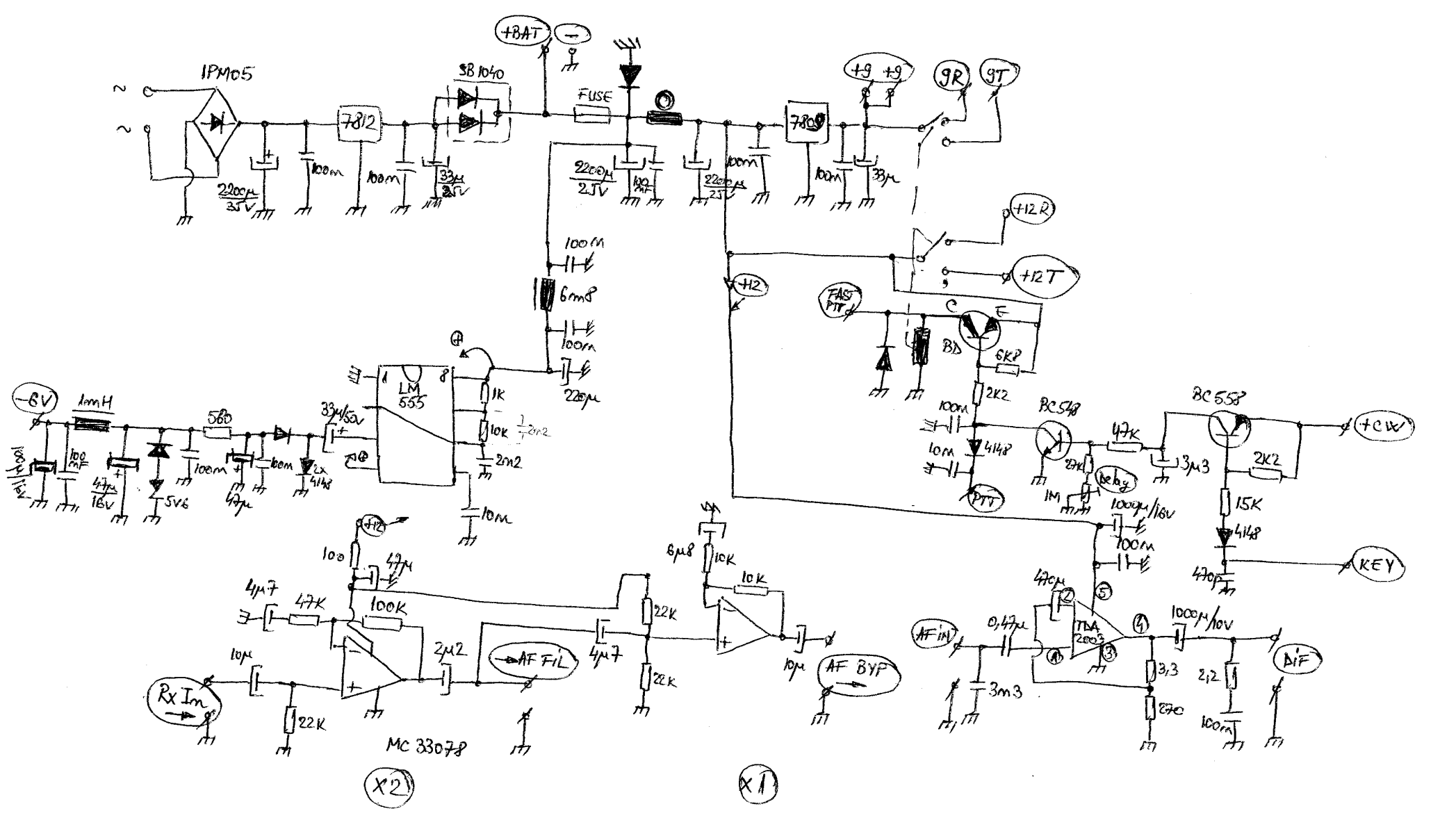
IPM05
7812
SB 1040
+BAT
FUSE
7805
+9
+9
9R
9T
+12R
+12T
+12
FAST PTT
BD
BC548
BC558
PTT
-6V
1mH
560
LM 555
5V6
4148
AF FIL
AF BYF
AF in
TDA 2003
KEY
+CW
AF
Rx In
MC 33078
X2
X1