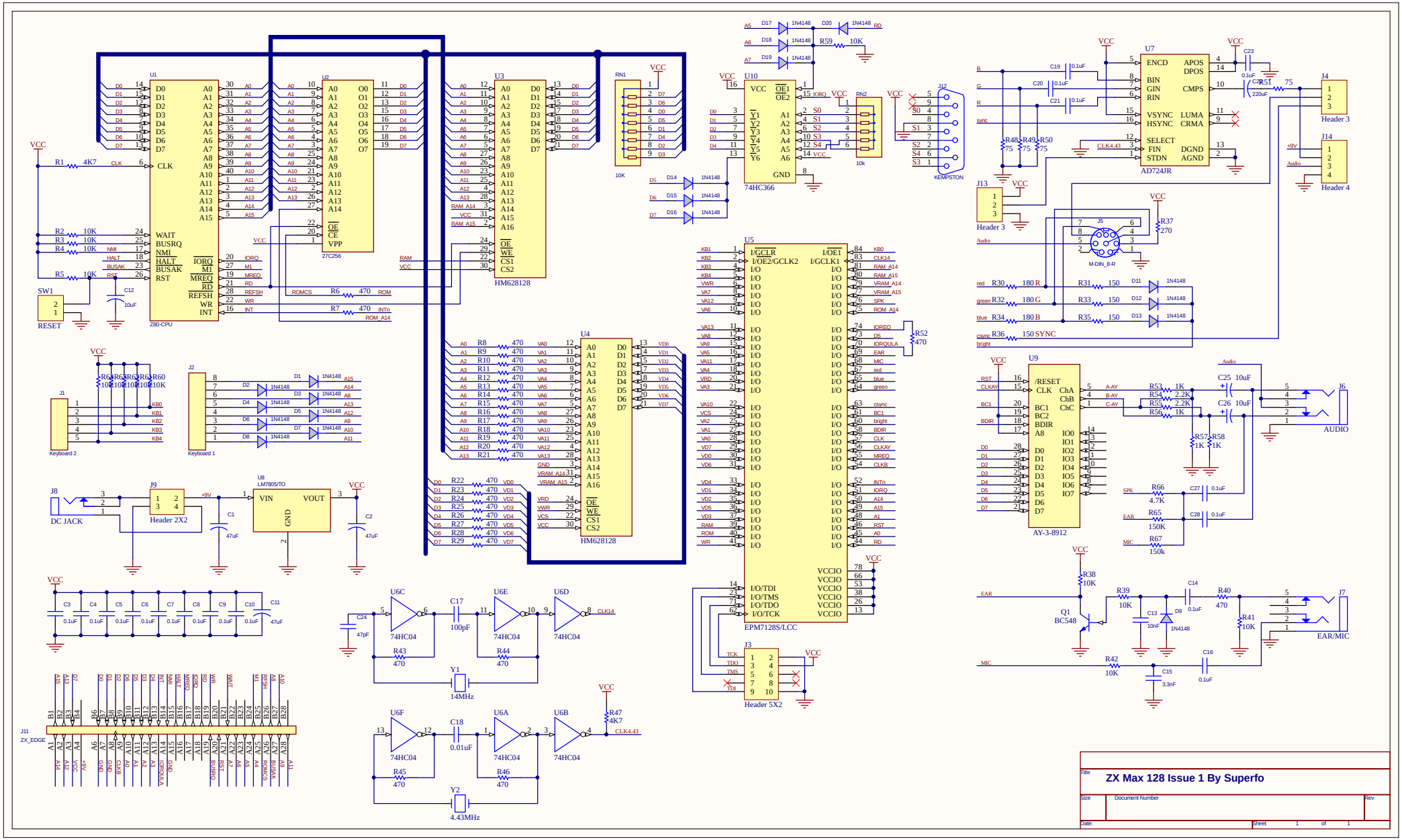
U1
Z80-CPU
U2
27C256
U3
HM628128
U4
HM628128
U5
EPM7128S/LCC
U7
AD724JR
U9
AY-3-8912
U10
74HC366
RN1
RN2
J1
Keyboard 2
J2
Keyboard 1
J3
Header 5X2
J4
Header 3
J5
M-DIN_8-R
J6
AUDIO
J7
EAR/MIC
J8
DC JACK
J9
Header 2X2
J11
ZX_EDGE
J12
KEMPSTON
J13
Header 3
J14
Header 4
SW1
RESET
U8
LM7805/TO
VIN
VOUT
GND
U6C
U6D
U6E
U6F
U6A
U6B
74HC04
Y1
14MHz
Y2
4.43MHz
Q1
BC548
VCC
ZX Max 128 Issue 1 By Superfo
Sheet 1 of 1