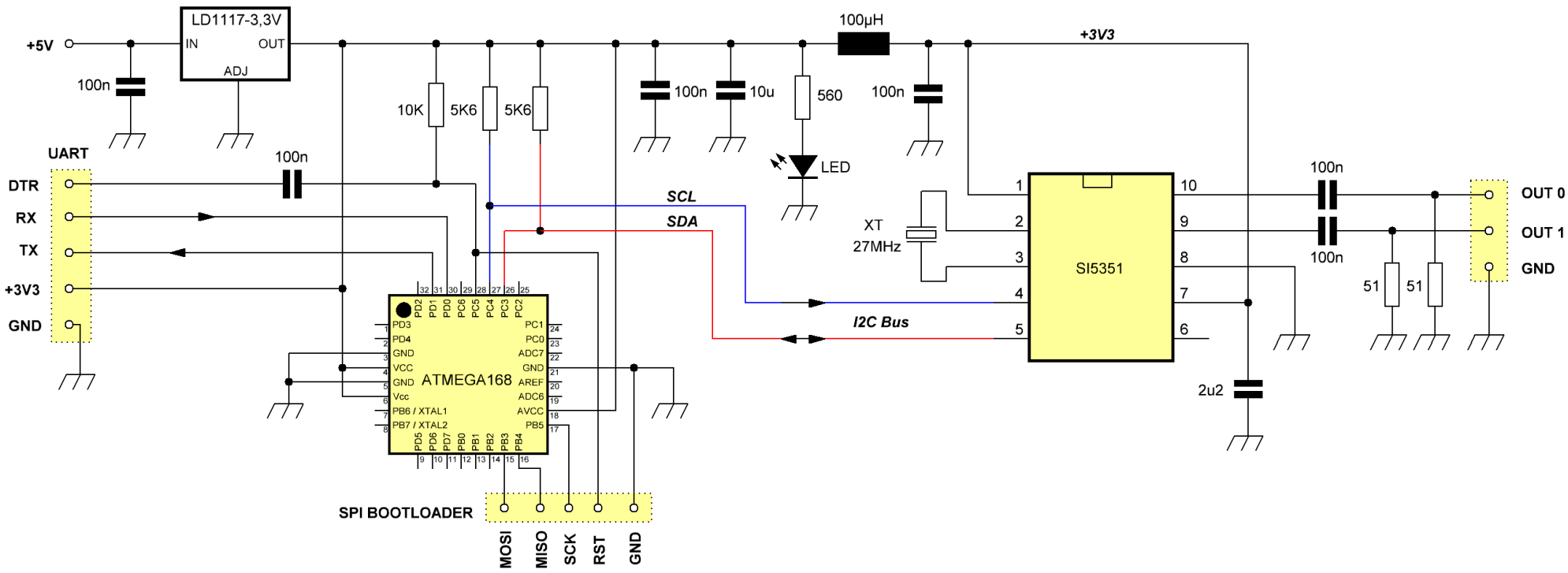

Si5351 fixed oscillator controlled by Arduino