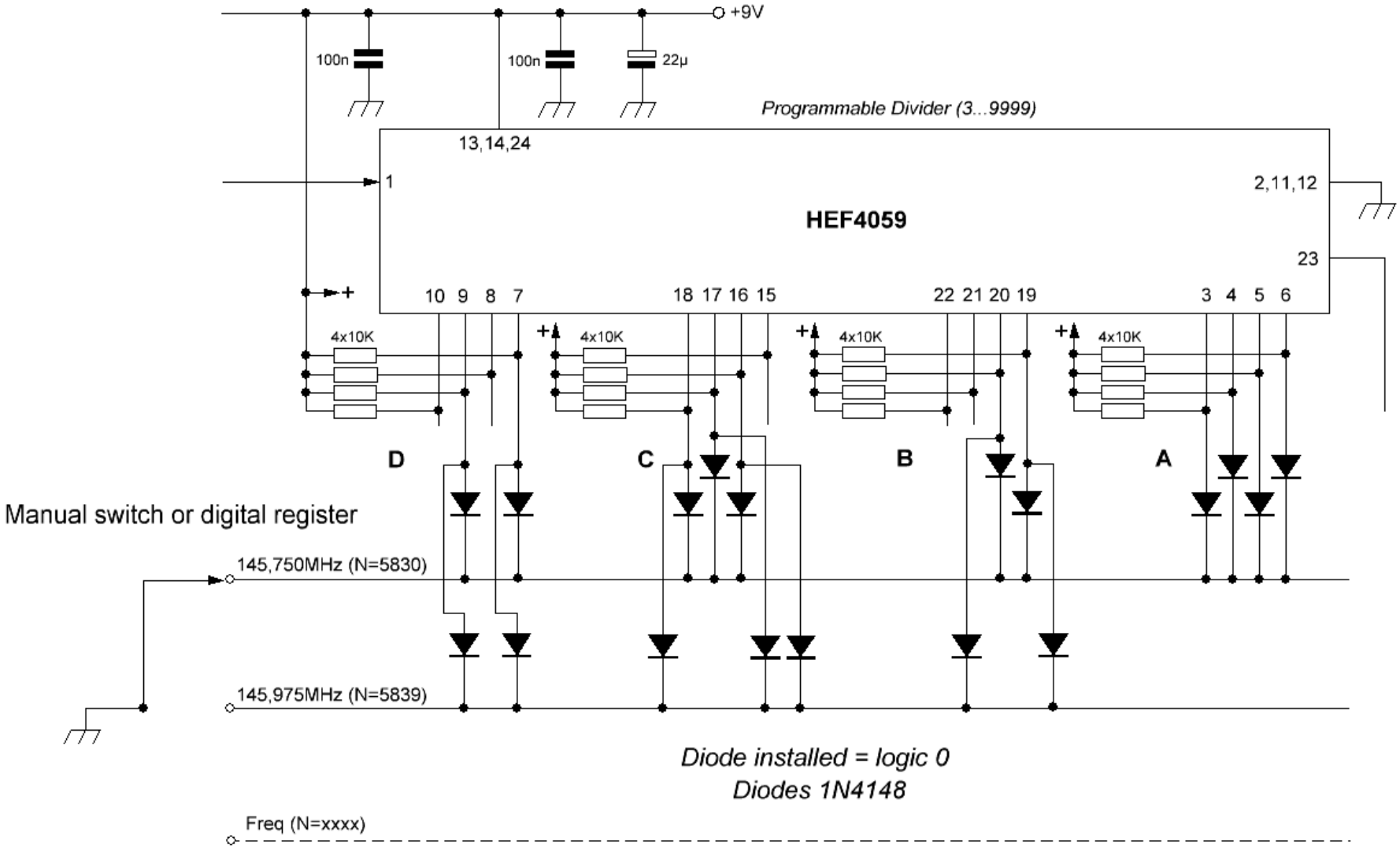

Switch for pre-programmed channels (frequencies)

Wide Band PLL with 12.5/25KHz step

Pastorcici Robert - YO4HFU

03.01.2007