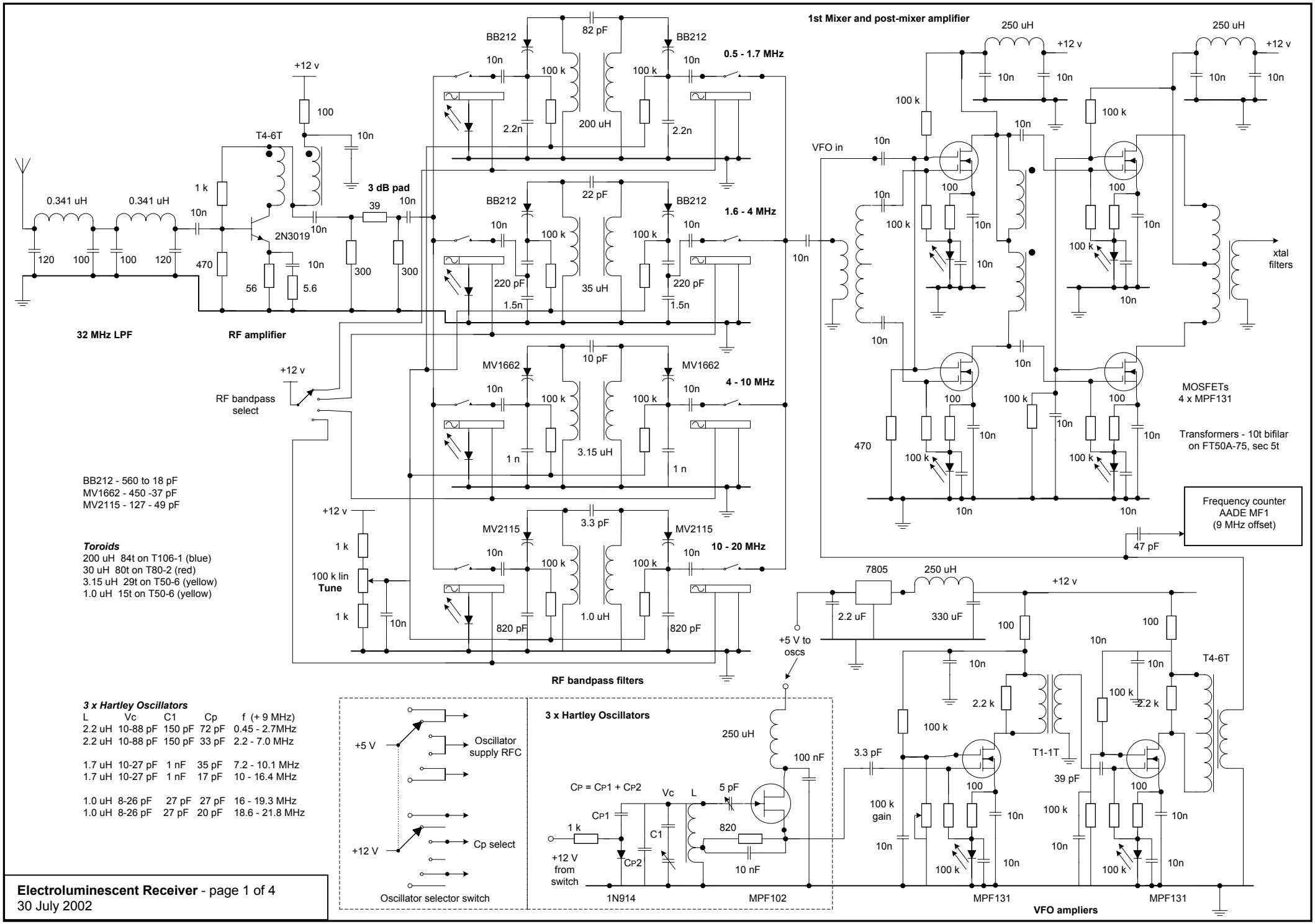

Electroluminescent Receiver - page 1 of 4
30 July 2002

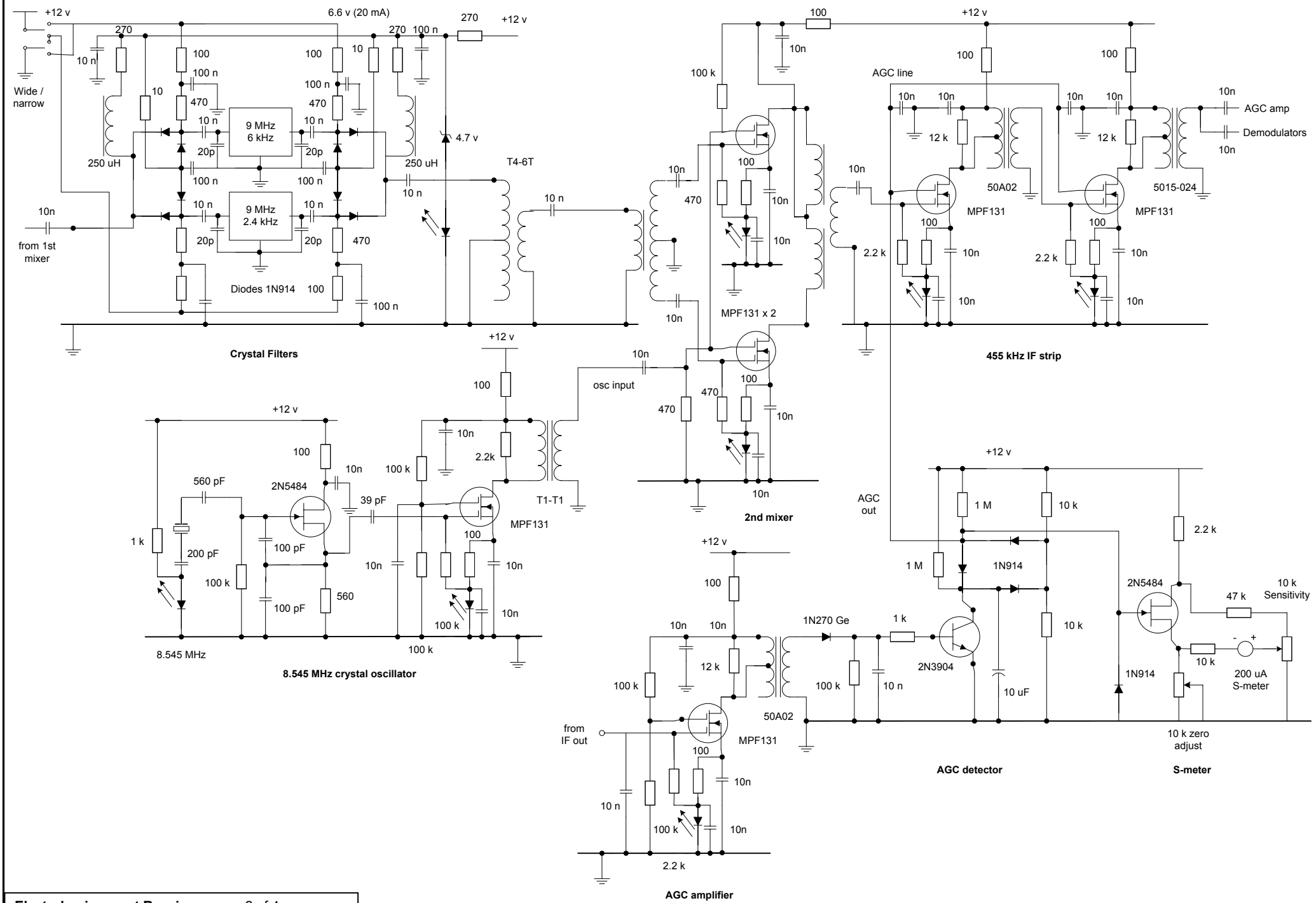

Electroluminescent Receiver - page 2 of 4
30 July 2002

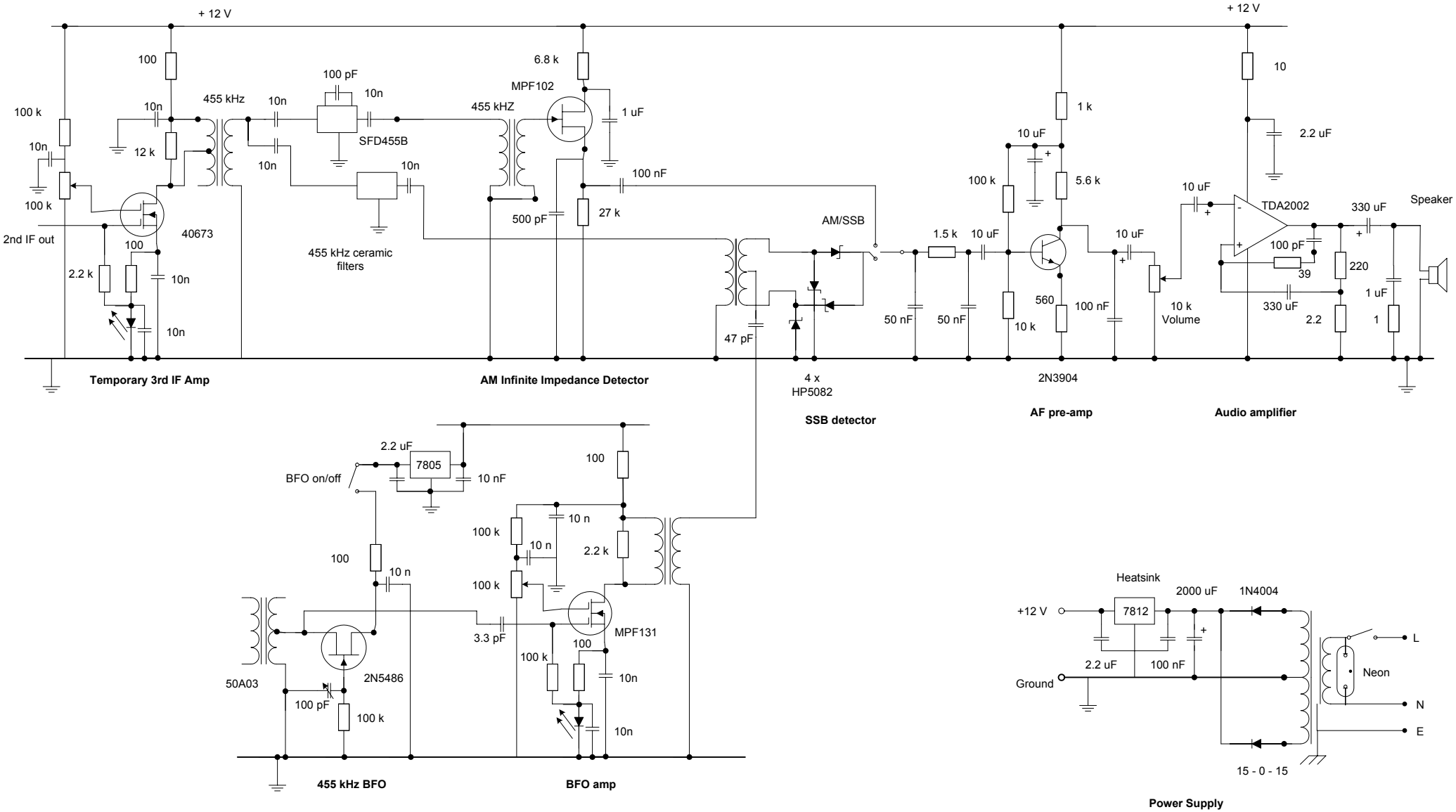

Electroluminescent Receiver - page 3 of 4
30 July 2002

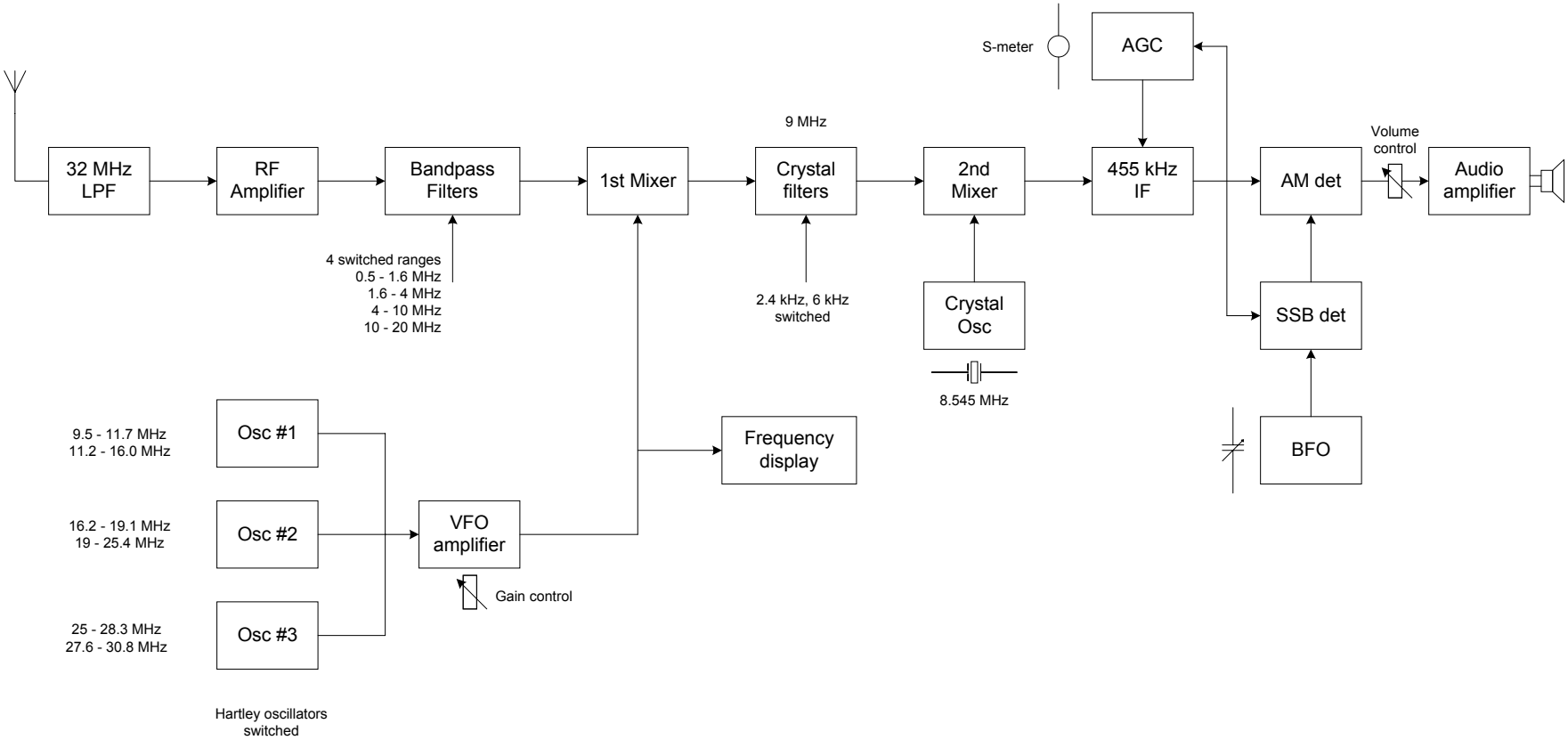
S-meter
AGC
9 MHz
Volume control
32 MHz LPF
RF Amplifier
Bandpass Filters
1st Mixer
Crystal filters
2nd Mixer
455 kHz IF
AM det
Audio amplifier
4 switched ranges
0.5 - 1.6 MHz
1.6 - 4 MHz
4 - 10 MHz
10 - 20 MHz
2.4 kHz, 6 kHz switched
Crystal Osc
8.545 MHz
SSB det
9.5 - 11.7 MHz
11.2 - 16.0 MHz
Osc #1
Frequency display
BFO
16.2 - 19.1 MHz
19 - 25.4 MHz
Osc #2
VFO amplifier
Gain control
25 - 28.3 MHz
27.6 - 30.8 MHz
Osc #3
Hartley oscillators switched