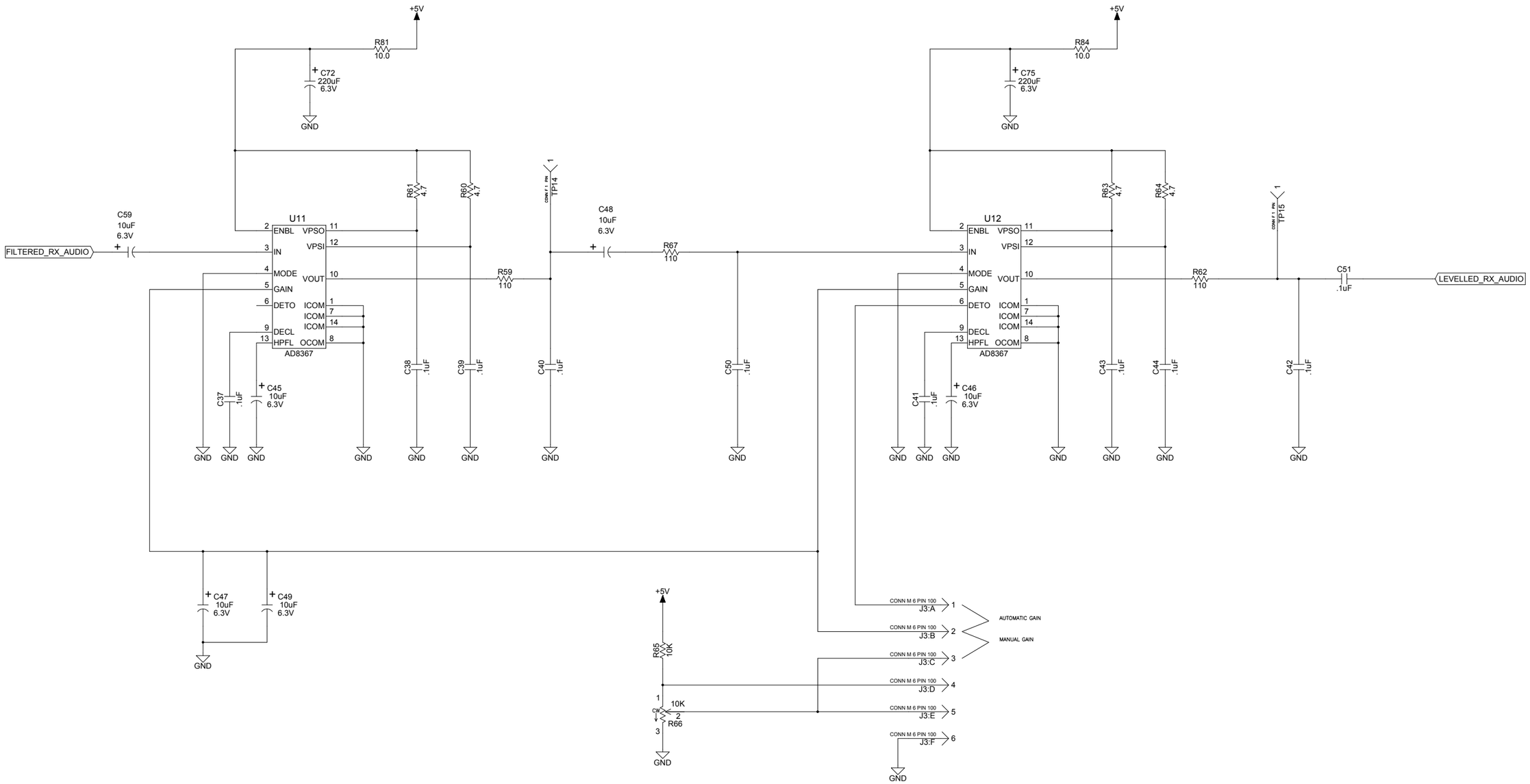

Title RCVR AGC Amplifiers		
Size D	Number	Rev 0
Date 02 APR 06	Drawn by PAlexander	
Filename	Sheet 4 of 5	