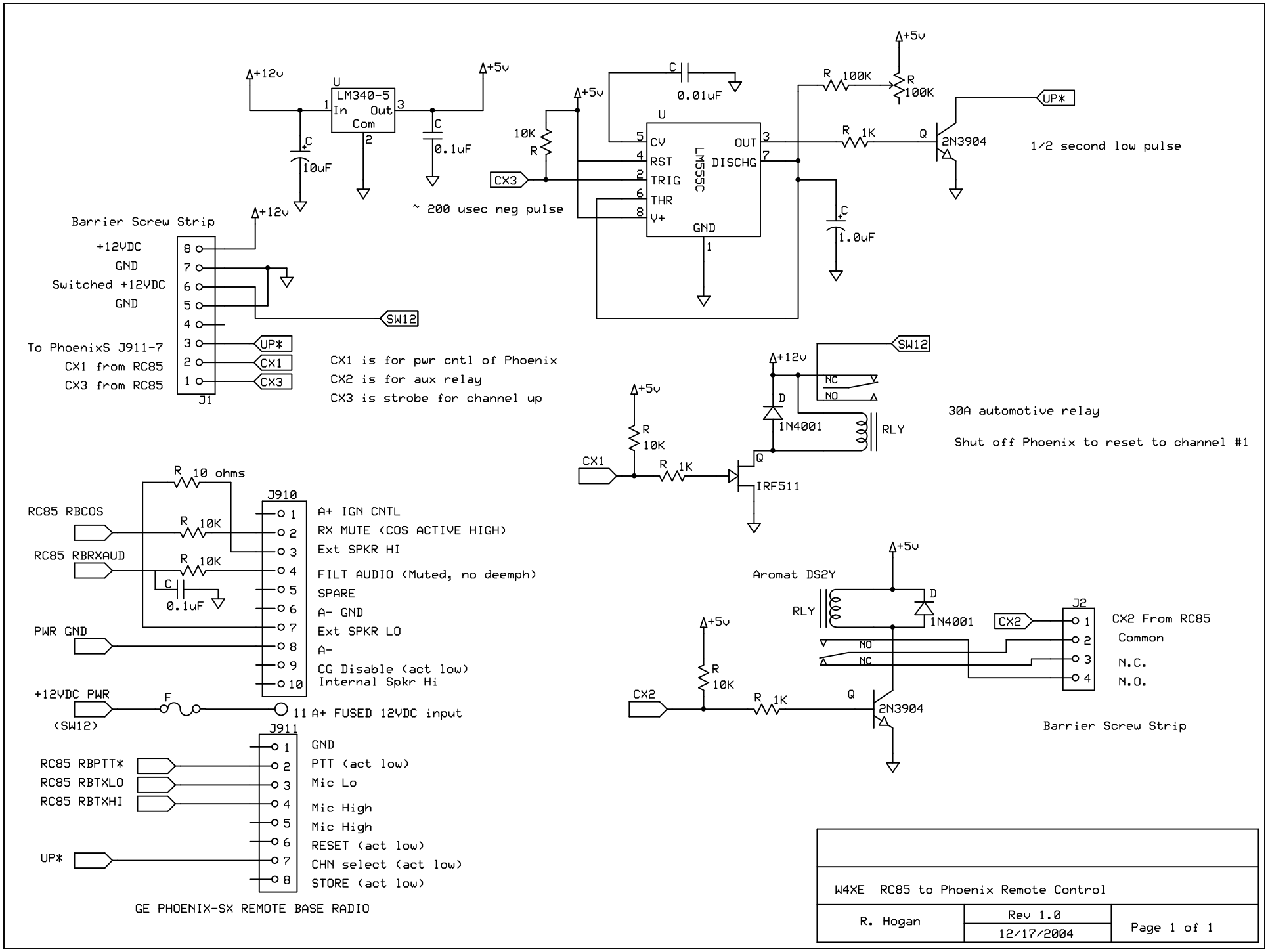
+12v
U
LM340-5
In
Out
Com
1
2
3
C
10uF
C
0.1uF
+5v
+5v
10K
R
CX3
C
0.01uF
U
5
4
2
6
8
CV
RST
TRIG
THR
V+
LM555C
OUT
DISCHG
GND
3
7
1
R 100K
R
100K
R 1K
Q
2N3904
UP*
1/2 second low pulse
C
1.0uF
~ 200 usec neg pulse
Barrier Screw Strip
+12VDC
GND
Switched +12VDC
GND
To PhoenixS J911-7
CX1 from RC85
CX3 from RC85
8
7
6
5
4
3
2
1
J1
+12v
SW12
UP*
CX1
CX3
CX1 is for pwr cntl of Phoenix
CX2 is for aux relay
CX3 is strobe for channel up
+12v
SW12
NC
NO
D
1N4001
RLY
30A automotive relay
Shut off Phoenix to reset to channel #1
+5v
R
10K
CX1
R 1K
Q
IRF511
R 10 ohms
J910
RC85 RBCOS
R 10K
RC85 RBRXAUD
R 10K
C
0.1uF
PWR GND
+12VDC PWR
(SW12)
F
1 A+ IGN CNTL
2 RX MUTE (COS ACTIVE HIGH)
3 Ext SPKR HI
4 FILT AUDIO (Muted, no deemph)
5 SPARE
6 A- GND
7 Ext SPKR LO
8 A-
9 CG Disable (act low)
10 Internal Spkr Hi
11 A+ FUSED 12VDC input
J911
RC85 RBPTT*
RC85 RBTXLO
RC85 RBTXHI
UP*
1 GND
2 PTT (act low)
3 Mic Lo
4 Mic High
5 Mic High
6 RESET (act low)
7 CHN select (act low)
8 STORE (act low)
GE PHOENIX-SX REMOTE BASE RADIO
+5v
Aromat DS2Y
RLY
D
1N4001
NO
NC
+5v
R
10K
CX2
R 1K
Q
2N3904
J2
CX2
1 CX2 From RC85
2 Common
3 N.C.
4 N.O.
Barrier Screw Strip
W4XE RC85 to Phoenix Remote Control
R. Hogan
Rev 1.0
12/17/2004
Page 1 of 1