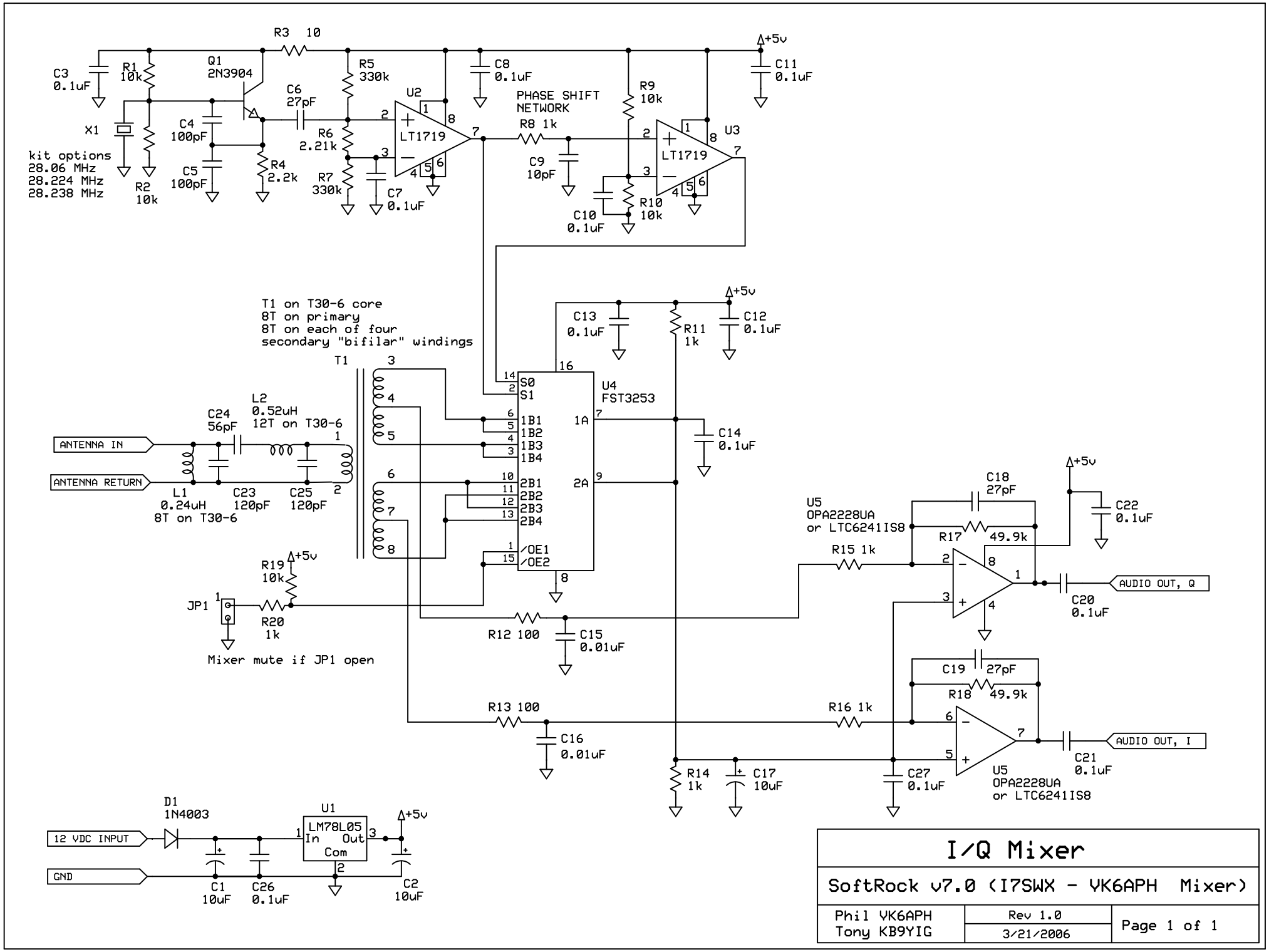
R3 10
+5v
C3 0.1uF
R1 10k
Q1 2N3904
R5 330k
C8 0.1uF
C11 0.1uF
C6 27pF
U2
PHASE SHIFT NETWORK
R9 10k
X1
C4 100pF
R6 2.21k
LT1719
R8 1k
U3
kit options
28.06 MHz
28.224 MHz
28.238 MHz
C5 100pF
R4 2.2k
R7 330k
C7 0.1uF
C9 10pF
R10 10k
R2 10k
C10 0.1uF
T1 on T30-6 core
8T on primary
8T on each of four
secondary "bifilar" windings
C13 0.1uF
R11 1k
C12 0.1uF
T1
U4 FST3253
S0
S1
1B1
1B2
1B3
1B4
2B1
2B2
2B3
2B4
/OE1
/OE2
1A
2A
C14 0.1uF
L2 0.52uH 12T on T30-6
C24 56pF
ANTENNA IN
ANTENNA RETURN
L1 0.24uH 8T on T30-6
C23 120pF
C25 120pF
R19 10k
JP1
R20 1k
Mixer mute if JP1 open
R12 100
C15 0.01uF
U5 OPA2228UA or LTC6241IS8
C18 27pF
R17 49.9k
R15 1k
C22 0.1uF
AUDIO OUT, Q
C20 0.1uF
C19 27pF
R18 49.9k
R13 100
R16 1k
C16 0.01uF
AUDIO OUT, I
C21 0.1uF
R14 1k
C17 10uF
C27 0.1uF
U5 OPA2228UA or LTC6241IS8
D1 1N4003
U1 LM78L05
In
Out
Com
12 VDC INPUT
GND
C1 10uF
C26 0.1uF
C2 10uF
I/Q Mixer
SoftRock v7.0 (I7SWX - VK6APH Mixer)
Phil VK6APH
Tony KB9YIG
Rev 1.0
3/21/2006
Page 1 of 1