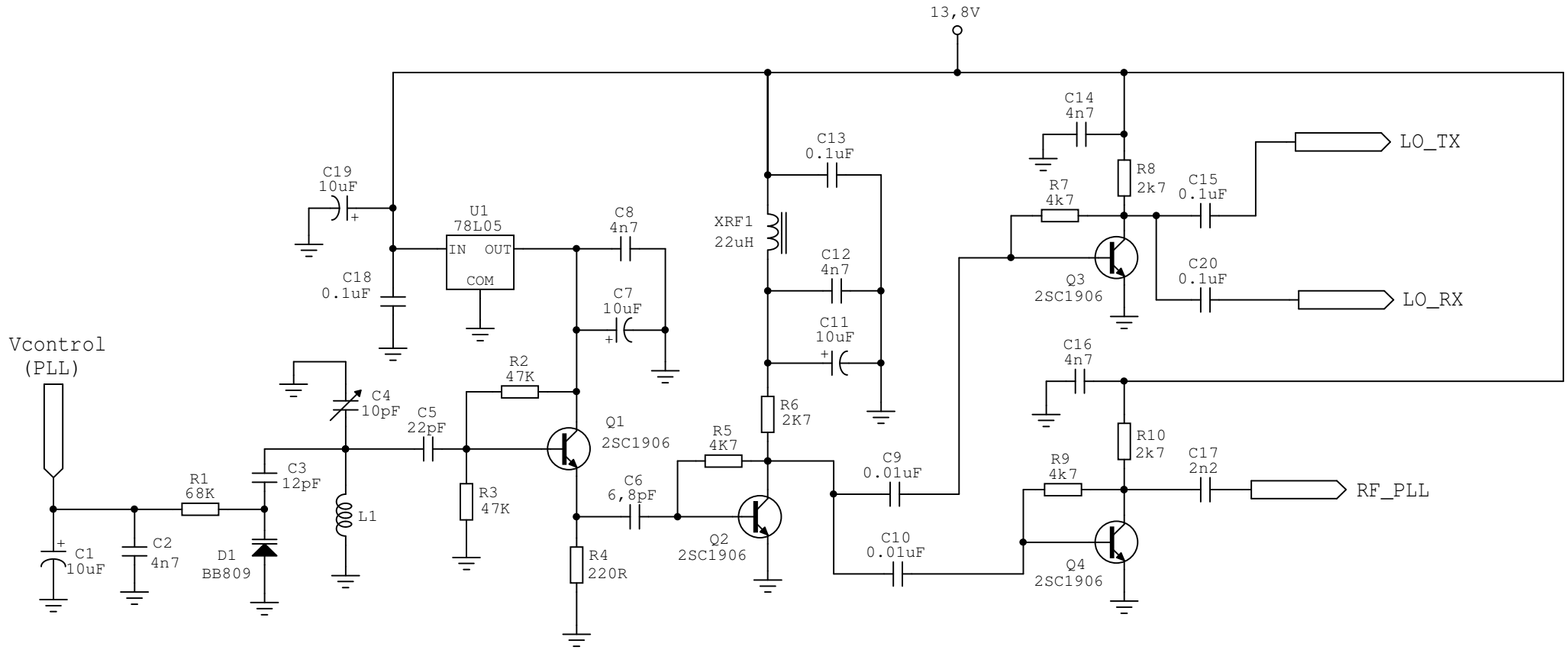

L1= 6 espiras fio 18AWG
Diâmetro da forma 5mm

Transverter TRV102 VCO	
Drawn & Mods by PY2MG Gomes Based on work of PY2OHH Miguel	
Rev 0	ID TRV102OS
Date: 18 Janeiro 2011	Page: 1 of 1