# DIY 45W SSB HF Linear Power Amplifier Amateur Radio Transceiver Shortwave Radio Development Board Kit

This document is an attempt to put the "manual" supplied for download on the seller's website into more conventional English. It is based primarily on the "*RF-AMP-2078 debug instructor V303*" (sic) downloaded from the website. You will note that the schematic is dated 5 August, the BoM sometime in September and the PCB is marked "20151229". I found more than a dozen inconsistencies in values and markings between the PCB and the documents. Also there appear to be several "typos" on the PCB silk screening. I have endeavored to sort this out and update my documentation to match the PCB supplied with the kit.

It is no doubt feasible for an experienced builder to successfully assemble the kit using only the schematic and the silk screening on the PCB. My objective is to make this inexpensive kit available to a wider audience of radio amateurs, who may feel less confident about building their first MOFET PA without some additional guidance. Anyone who does not have previous experience soldering the small SMD parts used in this kit is advised to practice first.

The structure of the manual set by the kit manufacturer has been maintained.

## TABLE OF CONTENTS


| Construction stage | Description | Page # |
|---|---|---|
| 1 | Preparations and required equipment | 3 |
| 2 | Soldering components on the PCB | 3 |
| 3 | Installation of the heat sink | 4 |
| 4 | Initial power up and bias adjustment | 4 |
| 5 | Testing with RF input | 5 |
| 6 | Advanced modifications and experimentation | 6 |
| Schematic | Print this out and keep it handy while building the kit | 2 |
| Winding inductors | Instructions for winding transformers and RFC | 9-11 |
| Photos | PCB front and back, finished board | 12-13 |
| Bill of Materials | List of parts with photos to aid part identification | 14-16 |


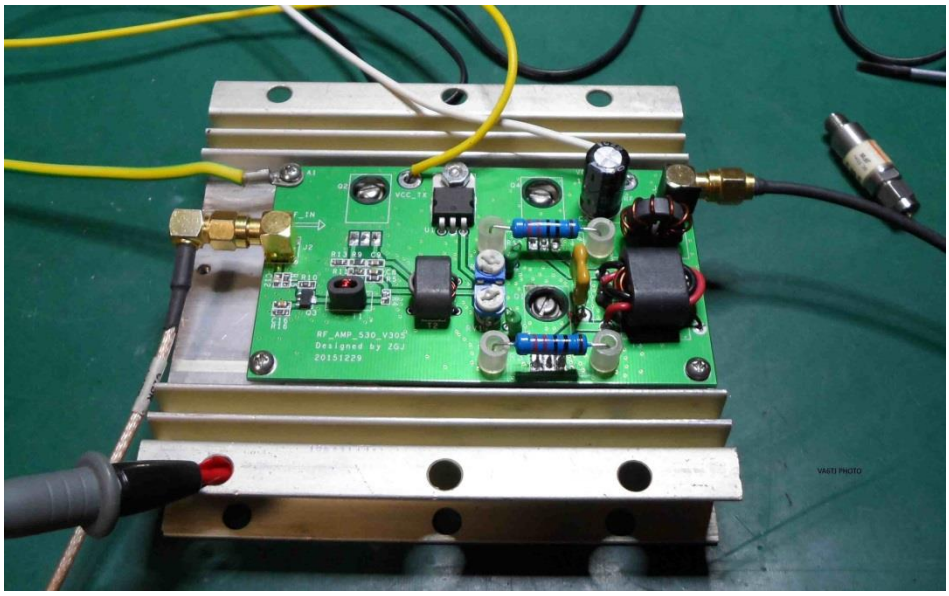


**My completed amplifier undergoing bench tests**

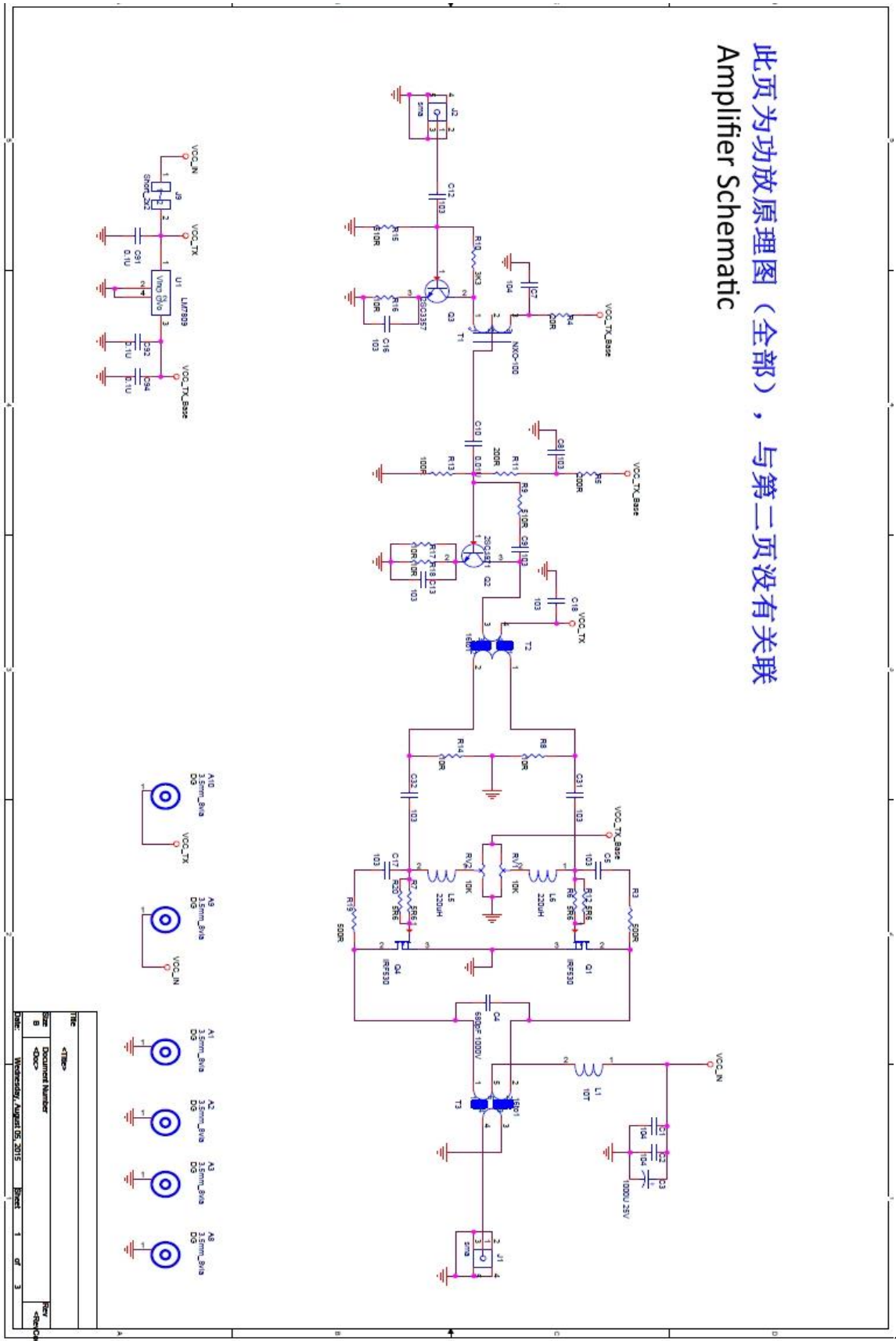
此页为功放原理图（全部），与第二页没有关联
Amplifier Schematic
VCC_IN
VCC_TX
VCC_TX_Base
Q1
IRF530
Q4
IRF530
Q2
2SC4517
Q3
BSC3357
T1
NXC-100
T2
T3
U1
LM7809
J1
J2
J9
A1
A2
A3
A8
A9
A10
Title
Document Number
Rev
Size
B
Date:
Wednesday, August 05, 2015
Sheet
1
of
3

## Step One: preparations – recommended equipment

1. Power supply
   13.8V, 10A or higher. Current-limiting protection desirable. If you don't have a current limiting supply a 10 ohm 5W resistor will suffice.
2. Dummy load
   50 Ω 100w (you will need an adapter to match the SMA output connector to the dummy load. Ensure that the dummy load can dissipate more power than the amplifier can generate.)
3. Heat sink
   The heat sink should be able to radiate all the heat generated by the amplifier board (the minimum recommended size: 100*70*50mm).
4. Multimeter
   includes a 10A current scale.
5. Oscilloscope
   Good to at least 20MHz and capable of 20V/div.
6. Signal generator
   Capable of an output of 20MHz@7dbm( 1.4Vpp into a 50 ohm load) [if you don't have a calibrated signal generator use attenuator pads from your test signal source to achieve 0.5 and then 1.4 V. P-P].
7. PCB tracing and heat sink mounting.
   Position the bare PCB on the heat sink (masking tape) and using a "sharpie" pen mark all the holes. Leave the PCB in position and place a TO220 device on the silkscreen outline of each of the 3 transistors and mark the position of the holes to be drilled and tapped to mount the transistors. Make a back-up tracing of the PCB (I used an old QSL card – just the right size). If you use this method you will have to mount the bent but unsoldered transistors on the heat sink before you solder them to the PCB. I used 4-40 SS hardware and 5 mm high nylon spacers at the corners to mount the board. The 5mm spacers keep the board just above the transistors fastened to the heat sink. When you are through marking, use the 4-40 hardware and spacers to make temporary "legs" for the PCB on 4 corners – that way the PCB will lay flat when soldering components.
8. Miscellaneous
   Soldering station with fine tip. 0.4 mm diameter solder. Illuminated magnifier. Cookie sheet to work on- it will keep all the parts from dispersing, especially to restrain all the little SMD resistors and capacitors from being tiddlywinked into hyperspace.

## Step Two : Soldering

Cover the heat sink with masking tape and mark out the PCB mounting holes and the holes for securing the TO-220 devices to the PCB. It is suggested to make a backup tracing of the PCB for convenience in later mounting parts in a case, etc. It is much easier to do this with a flat PCB.

1. Pre-bend pins for the three TO220 package **transistors** to look like the following illustration: the pins should only be bent, and not cut. Do NOT solder yet. These 3 transistors will be mounted on the heat sink, under the PCB.
   a. 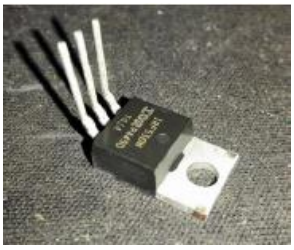
2. Pins of the U1 regulator IC, LM7809, should be bent the down, as this device is mounted on top of the board.
3. L1 should not be soldered at this stage.
4. The 680 pf mica capacitor should not be soldered at this stage.
5. R3 and R19 3W resistors should only be soldered after Q1 and Q4 have been positioned on the heat sink and their leads soldered. I mounted them on spacers to ensure cooling airflow under the resistors.
6. **Refer to the Bill of Materials (appendix) and the parts layout (page 11).** There are some inaccuracies in the silk screening of component numbers, so the parts layout takes precedence. Solder all the SMD capacitors, SMD resistors and Q3. Then solder U1, the leaded inductors and the electrolytic capacitor. Refer to the bill of materials and the top and bottom PCB diagrams on page 8. Check that all components are soldered correctly, that there are no pads without solder and no solder bridges.
7. Double check to insure that VCC_PA Voltage from your supply does not exceed 15V, without load. (see my note about C3, the 1000 uF electrolytic capacitor)
8. Inductors should be wound according to the instructions pages 8-10. Remove burrs from the holes in the ferrite cores before winding. As you wind them check the inductors with an ohmmeter and LC Meter. I have made inductance measurements and list them in the coil winding section.
9. Refer to the photo of the completed board on page 12. Position your board in the same orientation. Turn RV1 all the way counter-clockwise and RV2 should be rotated all the

way clockwise. It is important to set up the potentiometers this way so that you start power on adjustments with minimum bias on the gates of Q1 and Q4. After making this adjustment measure resistance between the top of L6 to ground and the top of L5 to ground. My measurements were approximately 15 ohms and 18 ohms, respectively.

10. C3, the 1000 uF electrolytic capacitor, supplied with the kit is rated at 16V. In my opinion this is pushing the envelope a bit too hard -- the supply in your ham shack supply is probably 13.6 – 13.8 V leaving only ~ 2V margin. I substituted a 1000 uF, 25V electrolytic with the same footprint.
11. With an ohmmeter check that the **VCC In** pad on the PCB is not shorted to ground.
12. Do not solder in L1 until bias adjustments to the final transistors are completed.
13. If you do not have a selection of coax cables with SMA connectors you may wish to skip the in and out connectors and solder mini coax such as RG-316 from the board to BNC or SO-239 connectors on your case.

## Step Three : Mounting the PCB on the heat sink

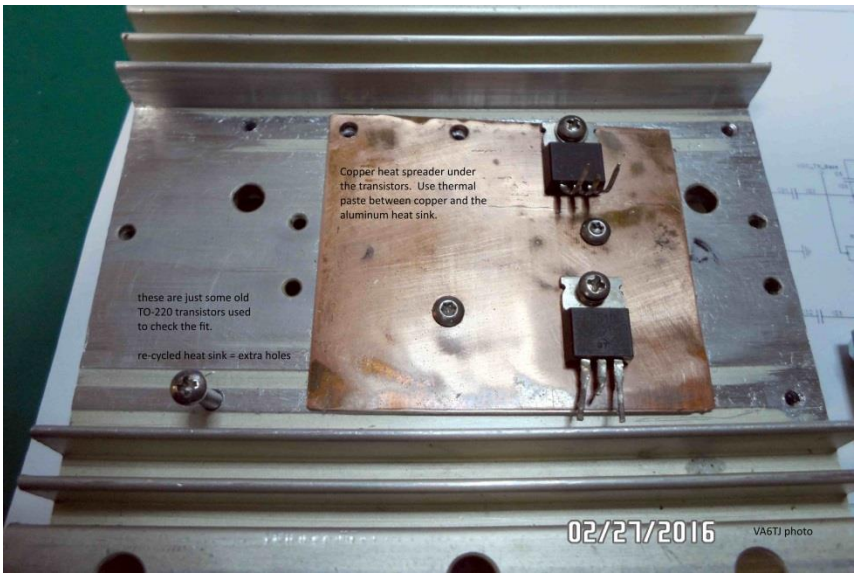


1. Drill holes in the heat sink corresponding to the position of the mounting holes in the TO220 Transistors (not the 7809 regulator), drill and tap holes for 3.0mm diameter screws. After drilling, clean the surface of the heat sink carefully, and don't leave any metal chips that could cause a short circuit. (If you use different hardware, e.g. 4-40 the drill size must be changed appropriately to take the tap. When drilling aluminum I put a drop of light oil on the center punch spot to prevent the drill bit from blinding.)
2. Place the silicone rubber pads in position on the heat sink.
3. Place the TO220 components.
4. Position the plastic insulated shoulder washer in the mounting hole of each TO220, and tighten the 3 mm screws. If you are in North America you will probably use 4-40 hardware and taps.

5. Install the completed circuit board on the heat sink, and solder the pins of the 3 TO-220 transistors to the board. Remove the board and solder the 3 W feedback resistors
6. Check the electrical resistance between the circuit board and the heat sink, the electrical resistance value tends to infinity if the installation was done correctly.

**Warning:** Use of a heat sink is essential. If the heat sink does not effectively dissipate the heat generated, the power output transistors will be damaged in a short time.

## Step Four: Power on

1. Connect the 50 Ω dummy load to the output, J1, the dummy load should have sufficient capacity.
2. Apply 12 VDC to VCC_TX and check for +9 V on the output lead of the 7809. Current draw for this stage was less than 200 mA.
3. Find R16, the resistor in series with the emitter of the small SMD pre-amplifier transistor, on the lower left side of the PCB. Voltage from emitter to ground (i.e. across R16) should be from 0.3V to 0.6V (my reading was 0.3V). If your measurement falls within this range no further adjustment is necessary.
4. Refer to schematic diagram. If the voltage of the R17 to ground (resistor in series with the emitter – center lead - of the 2SC1971 driver transistor) is about 0.8V, no further adjustment is necessary (my reading was 0.75V).

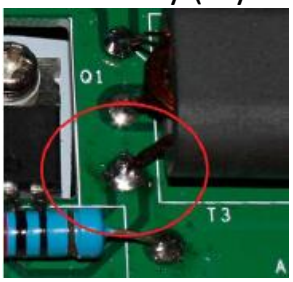


5. Open one side of the T3 transformer (The red circle shown the graphic below), and then connect the multimeter/ammeter between the pads for L1; make sure meter is at 10A range position. Adjust the potentiometer RV2 slowly anti-clockwise until the measured current is between 25 and 30mA. Make sure ammeter leads do not pass close to the input side of the board. (See my note below on using a resistor and voltmeter instead of the ammeter. )

Solder the leads of the transformer T3 in the red circles on the illustration. Adjust RV1 slowly clockwise until the current measured is between 50 and 60mA.

*Instead of holding ammeter leads on the pads of L1, I soldered a 10 ohm 5W resistor in place of L1. I then clipped voltmeter leads across the resistor and set RV2 to a reading of 0.25V and after connecting the other winding of T3, RV1 to a total of 0.5V. This is not ideal however it provides an extra safety factor by limiting the total current to the transistors to just over an amp – a level they can very comfortably handle without and damage. Keep the voltmeter/ammeter leads away from the input side of the amplifier. The potentiometer*

*settings are fussy and with a digital meter you could have a lag in reading -- so take it slowly. If you really want to more precisely balance the bias for the push pull final transistors, replace RV1 and RV2 with 10 turn trim pots of the same value (10K).*

6. Install L1.
7. Connect C4, the mica capacitor across the primary of the output transformer, as shown in the figure.
8. This completes adjustment of power amplifier quiescent current.

## Stage Five: Input signal

The seller's website lists the input power as 1-5 mW. This is 0 to 7 dBm. The maximum drive of 5 mW or 7dBm is equivalent to 0.5v RMS. As these drive levels are very low, I used a 50 ohm attenuator on the input. The attenuator presents a 50 ohm load to your exciter.

1. Set the oscilloscope to 20V/div, and check the dummy load, the oscilloscope should not show any signals if there is no input. (If you do see signals on the scope, there is the phenomenon of self-oscillation, "parasitics" and power must be immediately disconnected).
2. Input a 14Mhz, **0.2V RMS** signal ($V_{rms} = 0.3535 * V_{pp}$)
3. Oscilloscope will show 20-30V P-P amplitude signal across the dummy load on the output. I saw just over 1 W on the dummy load wattmeter and 20 V P-P on the scope. As the input signal is increased in amplitude (up to a maximum of 5 mW), the range of the oscilloscope should be set to more than 120V. If you do not see the expected amplification: stop and disconnect power. Troubleshoot the problem checking that all components are soldered correctly, the winding of the transformers is correct and so on.

I looked at the scope trace with 0.2V RMS input and the probe clipped on the T3 side of R3 and then R19. I rotated the bias adjustment pots a very small amount until the trace straightened out for each side. This adjustment greatly improved the look of the output signal. If you rotate the pot too far you will fry transistors. I advise you only attempt this adjustment if you have a supply where you can set current limiting.

**Postscript**: Please note that because of the variation between components, the initial conditions may not be optimal. In order to optimize the output waveform an experienced technician can make adjustments.

In practice, you must insert a low pass filter after the output, and filter out the harmonics.
*"The FCC requires transmitter spurious outputs below 30 MHz to be attenuated by 40 dB or more for power levels between 5 and 500 W (Ref 1)."* https://www.arrl.org/files/file/Technology/tis/info/pdf/9902044.pdf

## Stage Six: Advanced modifications

*This is the "Development Board" part of the kit.*

WARNING

Stage Six modifications （Advanced Modifications） could result in instability and possibly damage the power amplifier -- so please be careful.

1. The amount of feedback will affect linearity ("gain flatness" sic). In brief, higher negative feedback enables the power amplifier to operate in linear mode over a wider range. At low feedback levels gain will be instable. You should balance your requirements. The default feedback component parameters are 0.01uF+510Ω 3W. Keep in mind the power dissipation of the feedback resistance.

2. The quiescent operation point will Influence the gain of MOS transistor, and change the output waveform (linearity). The current set point is around 30mA. You can increase or decrease the bias current according to your own needs.

3. T3 output transformer's ratio of winding is set up to 2:6. In order to improve output power, ratio of winding can be adjusted to 2:7. Please note that you should not change the output transformer parameters radically. This could will increase heat buildup, and make the power amplifier unstable.

4. (N.B. this modification is a Catch 22, and if you do it well you will be pleased, but if you do it not very well, you will rebuild after buying a new kit!)

Generally speaking, in condition of making adjustment of the T2 input transformer's winding ratio, you have to wind T2 secondary 2 turns. T2 primary can wound in range of 5-7 turns.
If you wind 5 turns, the output power will increase. If you wind 7 turns, power amplifier usage frequency will increase. Please take into consideration the projected operating conditions.

"Attention: you can't wind T2 primary 4 turns. Otherwise you will burn out the transistors. You will hear it poof, and smell something burning. When the PCB trace has burnt, the MOS transistor and DS will break over directly."

# Winding Inductors

1. Different color lines are used in the illustrations to represent for the primary and secondary.

2. The edges of holes in the ferrite may be very sharp. To avoid cutting the insulation and shorting the winding smooth any sharp edges (de-burr) by using a drill bit one size larger than the hole and twirling it between the fingers in the hole. A round needle file may also be used. Caution – ferrite is a brittle ceramic material.

3. How to count turns: a turn is counted whenever a wire passes through the hole in the core – for a binocular core: through both holes.

## First: winding T1:

Just for purposes of illustration the drawing below shows 2 turns each side of the center tap (CT), but T1 needs to be wound 4 or 5 turns of the 0.4mm wire provided on each side of the CT. Count 4 turns – twist the wire as shown and continue to wind a further 4 turns. I measured 7.76 uH across the transformer and 1.95 uH from CT to each side (I believe that part of the windings cancel each other when you measure from the CT).

T1 transformer

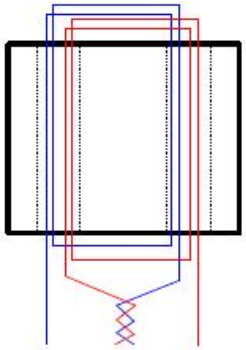

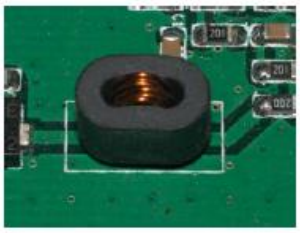

2

## Second: winding T2

T2 primary should be winded 6 turns, T2 secondary should be wound 2 turns. I measured 3.6 uH across the primary and 0.12 uH on the secondary winding.

Pay attention: The transformer winding is very important, if the secondary is wound with too many turns, the MOS Field-Effect-Transistor will exceed breakdown voltage and be destroyed. Check the number of the turns in the winding as detailed above and shown in the following illustration:

T2 transformer

Primary 4 turns
Secondary 1 turn

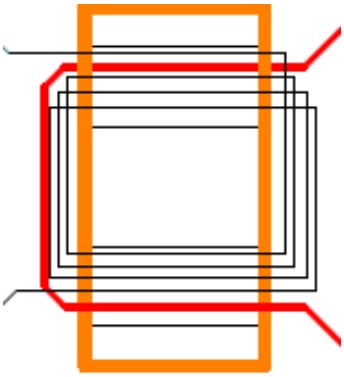

You will note that the schematic shows the multiple turn winding and the pads numbered one and two towards the IRF530 gates while the photos show a directional arrow to the right. The illustration above shows one turn to the right (IRF530 gates). I reasoned that the IRF530 gates are the low impedance side so I put the single turn winding to drive the gates.

## Third: winding T3

Primary should be wound 2 turns, T2 secondary should be wound 6 turns. I measured 3.8 uH on the secondary and 0.96 uH on the primary = 0.26 uH on each side of CT.
Primary has intermediate tap. Use the heavy gauge wire.

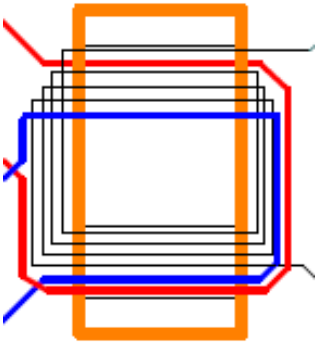

T3 transformer

Secondary 4 turns

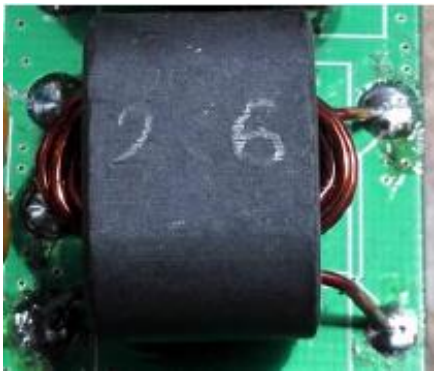


## Fourth: winding of L1 RFC

Toroid core should be wound with 7—10 turns of the heavy gauge wire. I wound 9 turns and measured 5 uH.

L1, the RFC is shown in the photo below.

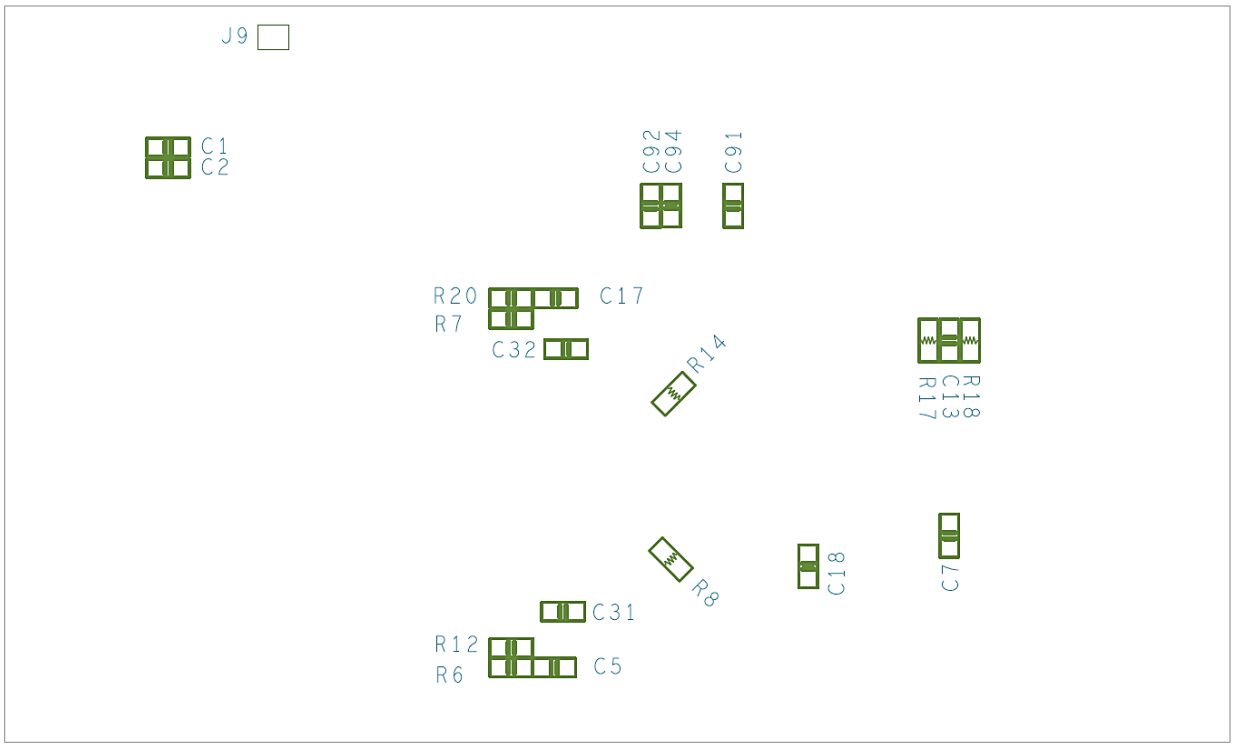
J9
C1
C2
C92
C94
C91
R20
R7
C17
C32
R14
R18
C13
R17
R8
C18
C7
C31
R12
R6
C5

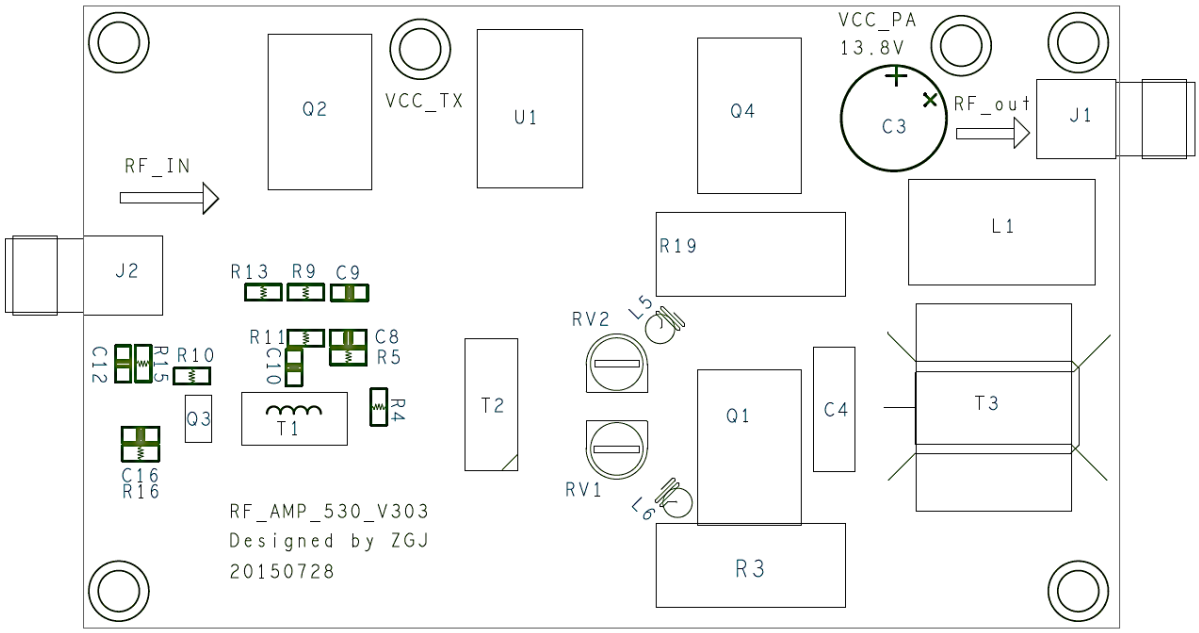
VCC_PA
13.8V
Q2
VCC_TX
U1
Q4
C3
RF_out
J1
RF_IN
L1
J2
R19
R13
R9
C9
RV2
L5
R11
C8
C12
R15
R10
C10
R5
T2
Q1
C4
T3
Q3
T1
R4
C16
R16
RV1
L6
RF_AMP_530_V303
Designed by ZGJ
20150728
R3

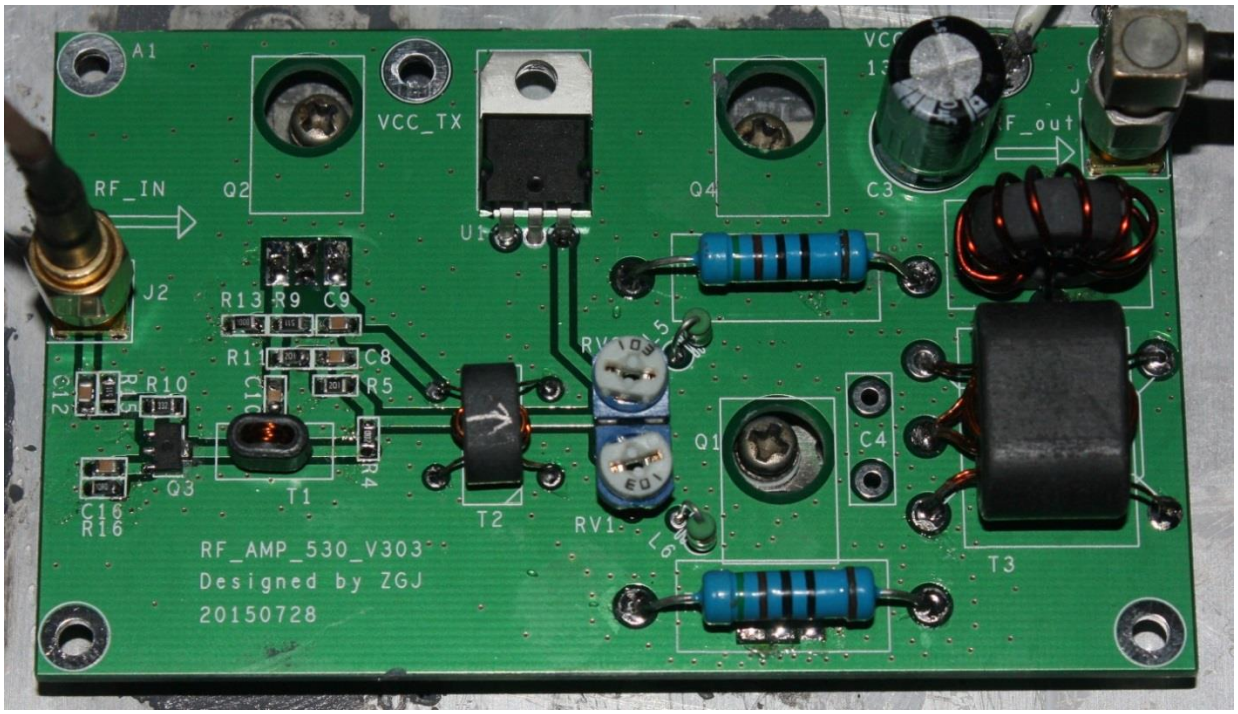


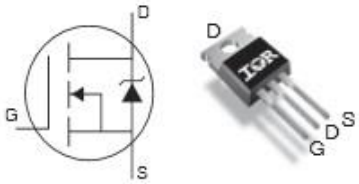


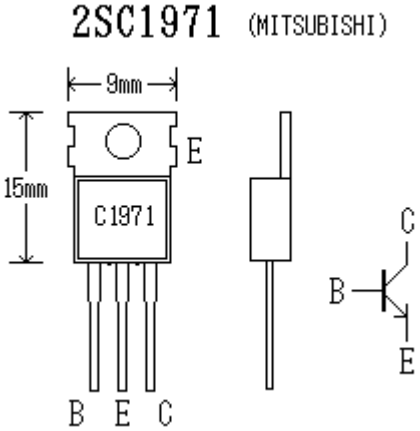


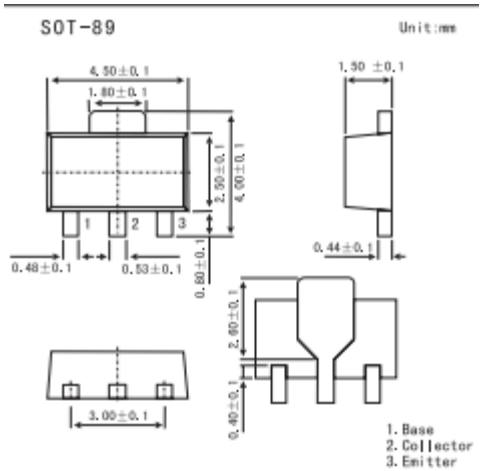


**IRF 530** **2SC1971** **2SC3357**

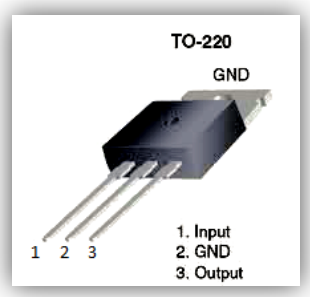


← **LM7809**

Bill of Materials – Parts List

| QTY | Part Number | Description | Package | Remarks |
|---|---|---|---|---|
| 14 | C5,C7,C8,C9,C10, C12, C13, C16, C17, C18, C31,C32, C36, C37 | .01 uF, (103) SMD cap | C0805 | strip marked “103” |
| 5 | C1, C2, C91, C92, C94 | .1 uF (104) SMD cap | C0805 | strip marked “104” |
| 4 | R6, R7, R12, R20 | 5R6 SMD resistor | R0805 | R20, R6 mislabeled on silk screen as C95, C96 |
| 4 | R8, R14, R17, R18 | 10R SMD resistor | R0805 | |
| 2 | R4, R16 | 20R SMD resistor | R0805 | R4, close to C7, is mislabeled R20 on the PCB silk screening |
| 2 | R13, R21 | 100R SMD resistor | R0805 | 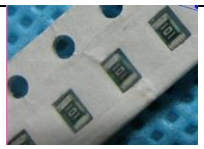 R21 is not on the schematic. I put it across the primary of T2 |
| 2 | R5, R11 | 200R SMD resistor | R0805 | |
| 1 | R10 | 3K3 | R0805 | |
| | | | | |
| 1 | C3 | 1000 uF 25 V electrolytic | | Do not use the 16V electrolytic – if that is what is supplied. Find a 25V replacement. |
| 1 | C4 | 680 pf mica capacitor | | install after setting bias for the final transistors as per instructions |
| 2 | RV1, RV2 | 10K trim pot | | 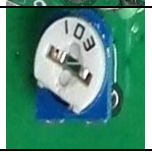 I suggest you substitute 10 turn trim pots of the same value. |

| | Part Number | Description | Package | Remarks |
|---|---|---|---|---|
| 2 | L5, L6 | 220 uH inductor | | Color coded red-red-brown. Look like a green resistors. |
| 2 | R3,R19 | 500R, 3W power resistor | | 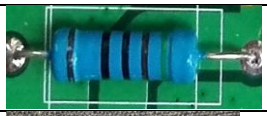 |
| 2 | Q1, Q4 | IRF530 MOSFET | TO-220 | 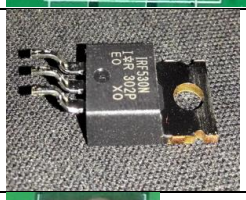 |
| 1 | Q2 | 2SC1971 driver transistor | TO-220 | |
| 1 | Q3 | 2SC3357 first amplifier transistor | SOT-89 | 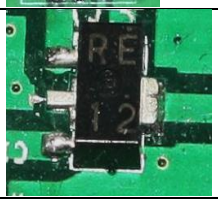 |
| 1 | U1 | LM7809<br>9V regulator | TO-220 | |
| | | | | |
| 1 | L1 | NXO-100 toroid core | | |
| 1 | T1 | NXO-100 small binocular core | | small |
| 1 | T2 | NXO-100 medium binocular core | | mid sized |

| | | | | |
|---|---|---|---|---|
| 1 | T3 | NXO-100 large binocular core | | largest supplied |

| QTY | Part Number | Description | Package | Remarks |
|---|---|---|---|---|
| 2 | J1, J2 | SMA female connector | | |
| 1 | FR_AMP_2078 | PCB | | 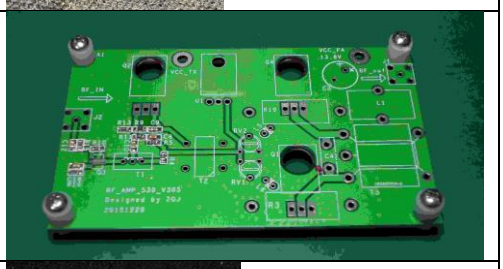 |
| 3 | | Insulating pads | | 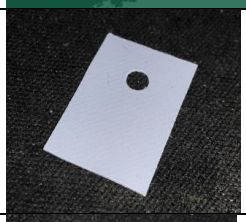 |
| 3 | | Plastic shoulder washers | | |
| 3 | Wire | Enamel insulated magnet wire, 2 thin (0.3 mm), 1 heavier gauge (0.9 mm) | | Surely you know what wire looks like… |