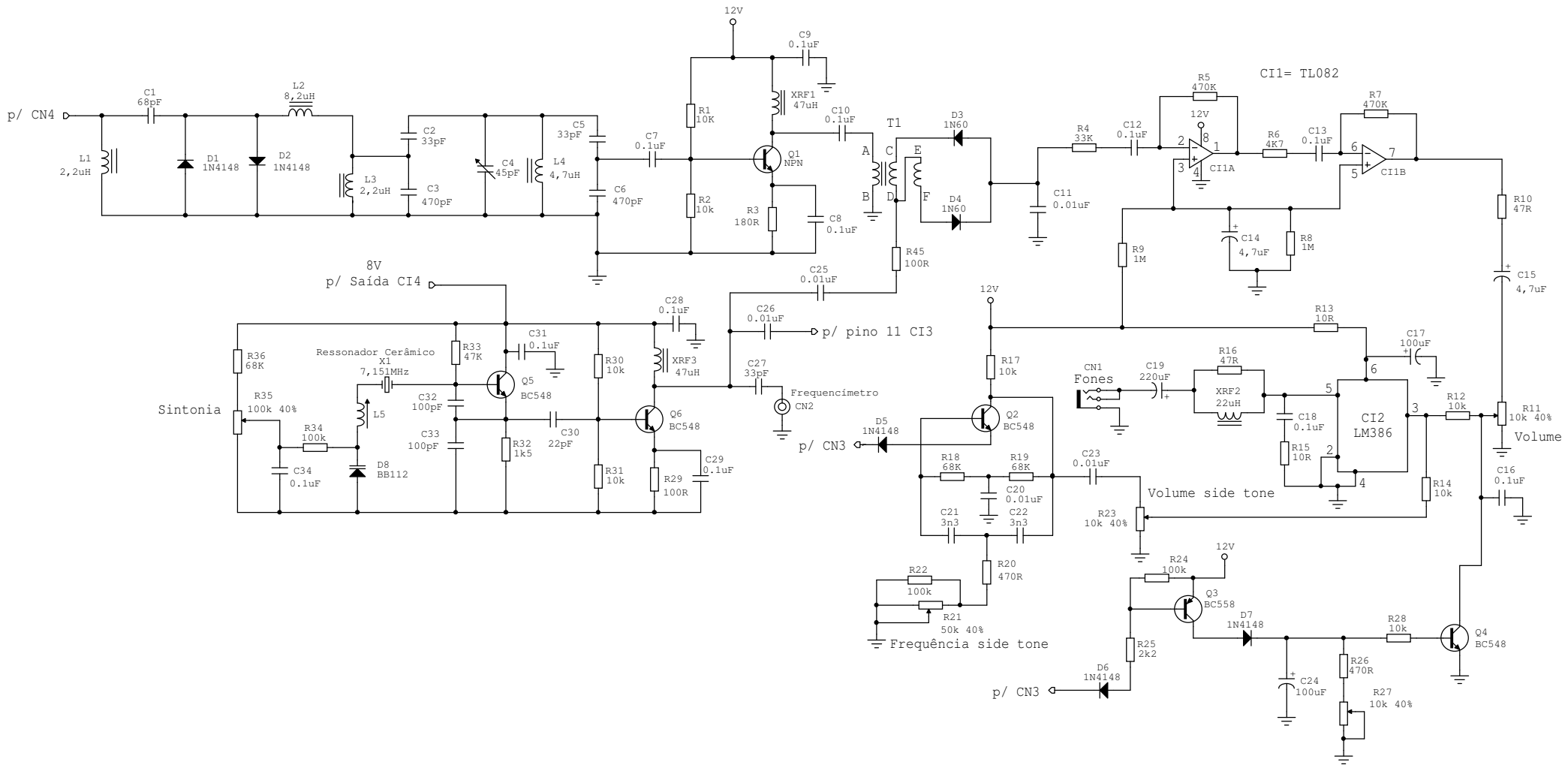

Pinel1 de PY2MG GOMES Transceptor de CW	
Baseado no riginal Capyau1 de PY2OHH Miguel	
Rev 0	ID Pinel1RX
Date: 7 janeiro 2066	Page: 1 of 1