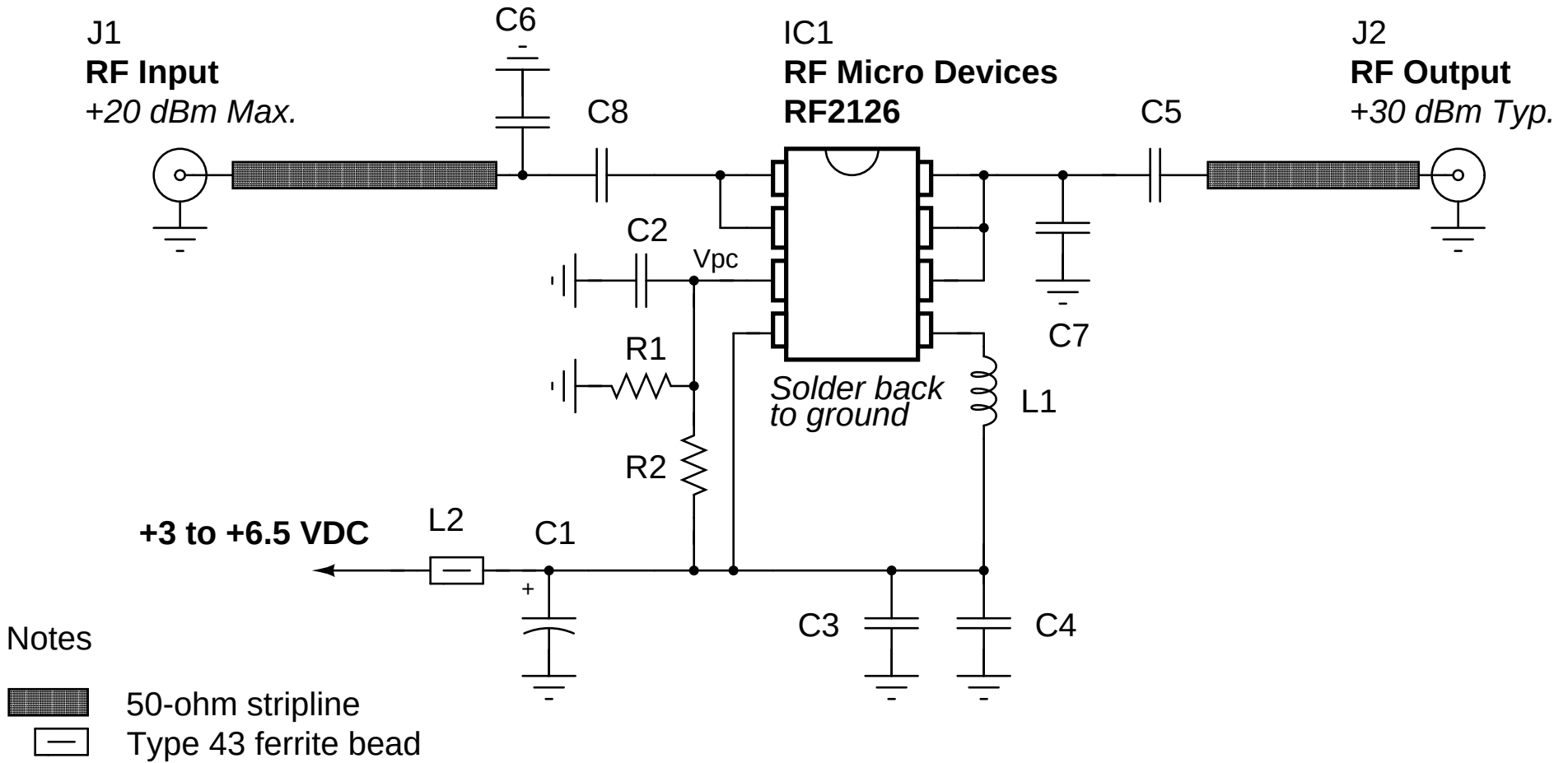

www.gbppr.org