Bi-Directional 900 MHz Amplifier

- 6 Watts RF power output
- 15 dB receive gain with bandpass filter

1000 pF are MHz bypass

0.1 uF are kHz bypass

RF connectors are SMA or N

Capacitors are ceramic SMT unless noted otherwise

Use Teflon PCB material or other low dielectric material (if possible)

All resistors are chip style carbon film, 5%

0603 or 0402 in RF or RF bypass sections
0805 for other

Inductors on the PIN bias lines should have a self resonant frequency higher than 950 MHz

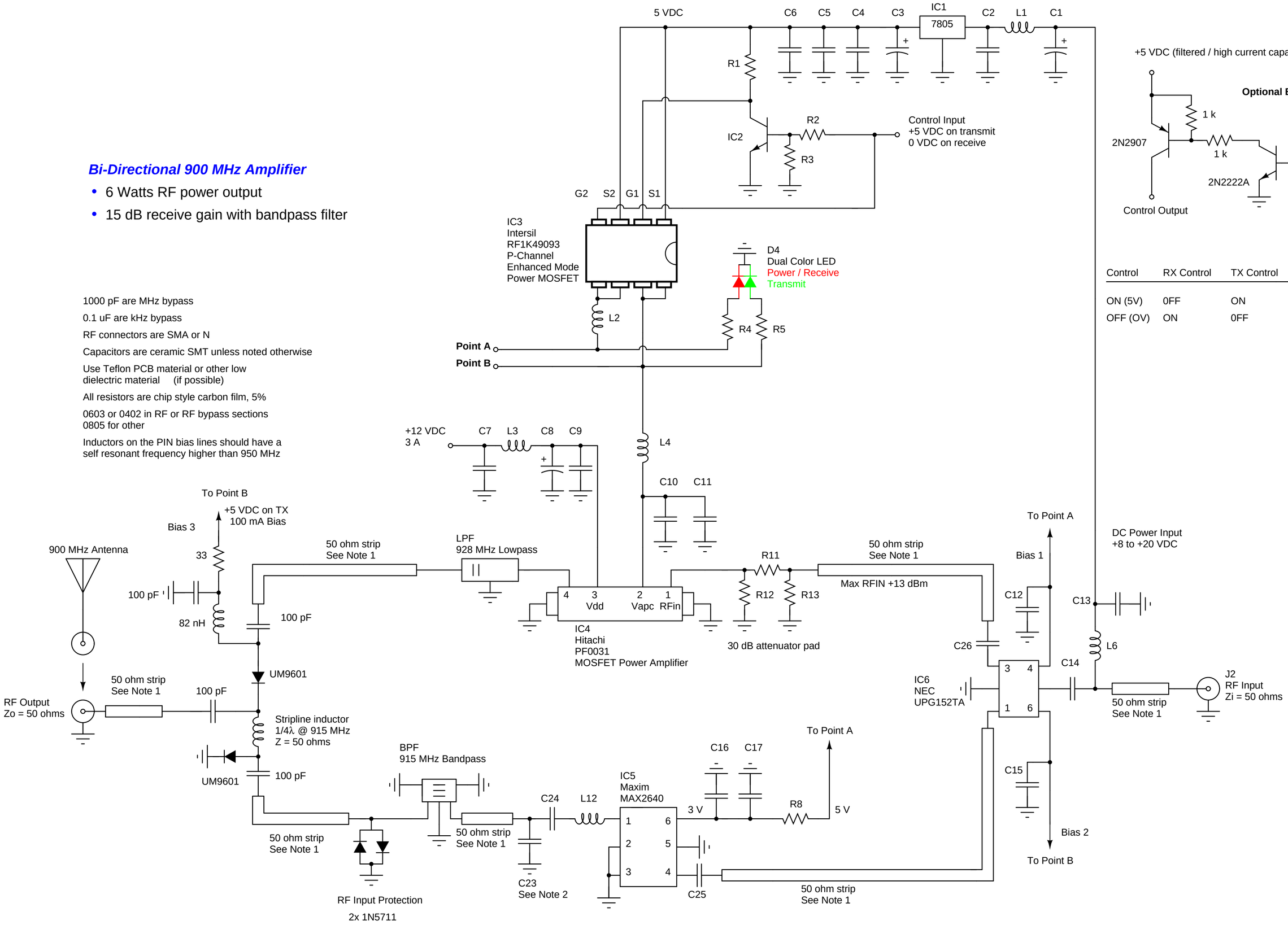

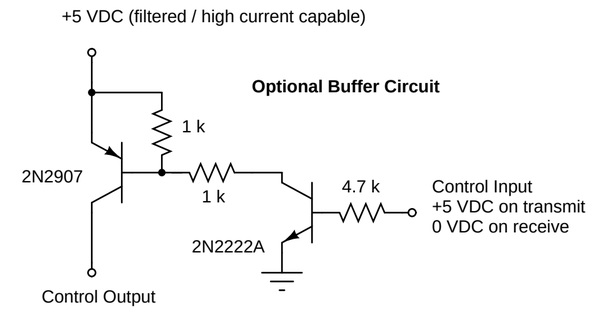

Control	RX Control	TX Control	Bias 1	Bias 2	Bias 3
ON (5V)	0FF	ON	ON	OFF	ON
OFF (OV)	ON	0FF	0FF	ON	0FF

Note 1 : 1.4 mm wide trace on ε_r = 4.34, 0.79 mm thick, double sided FR-4 copper clad board
Note 2 : Refer to the MAX2640 data sheet for proper position

GBPPR 900 MHz bi-directional amplifier		
Rev 2.0	02/18/2001	Sheet 1 of 1
Experimental Design		www.gbppr.org