OPERATION AND SERVICE MANUAL

8559A
SPECTRUM ANALYZER
.01 - 21 GHz

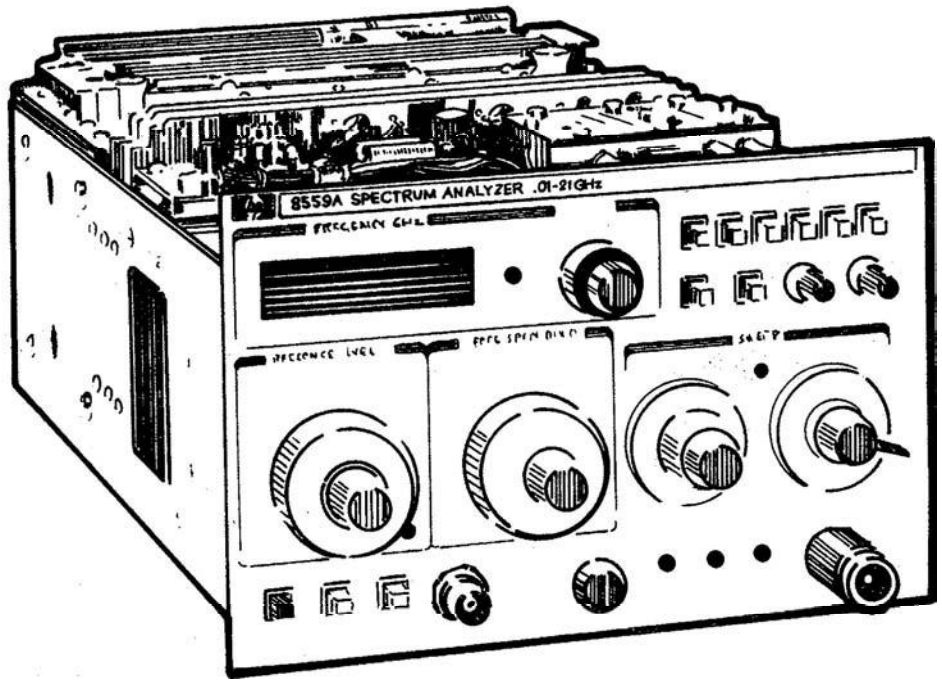

HEWLETT PACKARD

CERTIFICATION

Hewlett-Packard Company certifies that this product met its published specifications at the time of shipment from the factory. Hewlett-Packard further *certifies* that its calibration measurements are traceable to the United States National Bureau of Standards, to the extent allowed by the Bureau's calibration facility. and to the calibration facilities of other International Standards Organization members.

WARRANTY

This Hewlett-Packard instrument product is warranted against defects in material and workmanship for a period of one year from date of shipment. During the warranty period, Hewlett-Packard Company will, at its option, either repair or replace products which prove to be defective.

For warranty service or repair, this product must be returned to a service facility designated by HP. Buyer shall prepay shipping charges to HP and HP shall pay shipping charges to return the product to Buyer. However, Buyer shall pay all shipping charges, duties, and taxes for products returned to HP from another country.

HP warrants that its software and firmware designated by HP for use with an instrument will execute its programming instructions when properly installed on that instrument. HP does not warrant that the operation of the instrument, or software, or firmware will be uninterrupted or error free.

LIMITATION OF WARRANTY

The foregoing warranty shall not apply to defects resulting from improper or inadequate maintenance by Buyer, Buyer-supplied software or interfacing, unauthorized modification or misuse, operation outside of the environmental specifications for the product, or improper site preparation or maintenance.

NO OTHER WARRANTY IS EXPRESSED OR IMPLIED. HP SPECIFICALLY DISCLAIMS THE IMPLIED WARRANTIES OF MERCHANTABILITY AND FITNESS FOR A PARTICULAR PURPOSE.

EXCLUSIVE REMEDIES

THE REMEDIES PROVIDED HEREIN ARE BUYER'S SOLE AND EXCLUSIVE REMEDIES. HP SHALL NOT BE LIABLE FOR ANY DIRECT, INDIRECT, SPECIAL, INCIDENTAL, OR CONSEQUENTIAL DAMAGES, WHETHER BASED ON CONTRACT, TORT, OR ANY OTHER LEGAL THEORY.

ASSISTANCE

Product maintenance agreements and other customer assistance agreements are available for Hewlett-Packard products.

For any assistance, contact your nearest Hewlett-Packard Sales and *Service* Office. Addresses are provided at the back of this manual.

HEWLETT
PACKARD

OPERATION AND SERVICE MANUAL

8559A
SPECTRUM ANALYZER
0.1 – 21 GHz

SERIAL NUMBERS

This manual applies directly to instruments with serial numbers prefixed 2347A.

With modifications described in Section VII, this manual also applies to instruments with serial number prefixes 1909A through 2320A.

For additional information about serial numbers, see INSTRUMENTS COVERED BY MANUAL in Section I.

1424 FOUNTAINGROVE PARKWAY, SANTA ROSA, CALIFORNIA, 95401, USA

MANUAL PART NUMBER 08559-90012
Microfiche Part Number 08559-90013

Printed: January 1984

&217(176

&217(17

SAFETY SYMBOLS

The following safety symbols are used throughout this manual and in the instrument. Familiarize yourself with each of these symbols and its meaning before operating this instrument.

Instruction manual symbol. The instrument will be marked with this symbol when it is necessary for the user to refer to the instruction manual in order to protect the instrument against damage. Location of pertinent information within the manual is indicated by use of this symbol in the table of contents.

Indicates dangerous voltages are present. Be extremely careful.

CAUTION

The CAUTION sign denotes a hazard. It calls attention to a procedure which, if not correctly performed or adhered to, could result in damage to or destruction of the instrument. Do not proceed beyond a CAUTION sign until the indicated conditions are fully understood and met.

WARNING

The WARNING sign denotes a hazard. It calls attention to a procedure which, if not correctly performed or adhered to, could result in injury or loss of life. Do not proceed beyond a WARNING sign until the indicated conditions are fully understood and met.

GENERAL SAFETY CONSIDERATIONS

WARNING

BEFORE THIS INSTRUMENT IS SWITCHED ON, make sure it has been properly grounded through the protective conductor of the ac power cable to a socket outlet provided with protective earth contact. Any interruption of the protective (grounding) conductor, inside or outside the instrument, or disconnection of the protective earth terminal can result in personal injury.

WARNING

There are voltages at many points in the instrument which can, if contacted, cause personal injury. Be extremely careful. Any adjustments or service procedures that require operation of the instrument with protective covers removed should be performed only by trained service personnel.

CAUTION

BEFORE THIS INSTRUMENT IS SWITCHED ON, make sure its primary power circuitry has been adapted to the voltage of the ac power source. Failure to set the ac power input to the correct voltage could cause damage to the instrument when the ac power cable is plugged in.

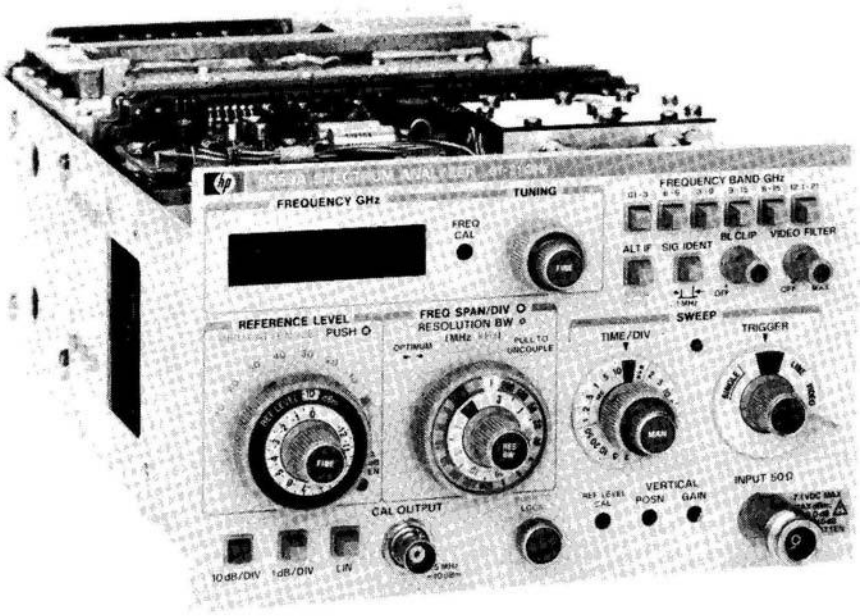

ADAPTER
1250-0780

SIDE STOP KIT
08558-60131

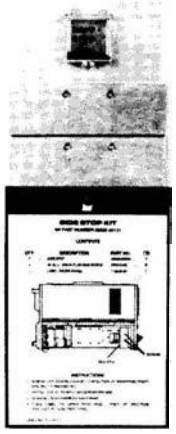

SPECTRUM ANALYZER
OVERLAY KIT
5060-0319

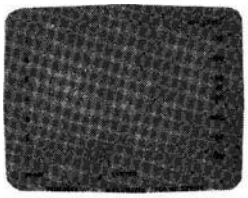

5020-8565

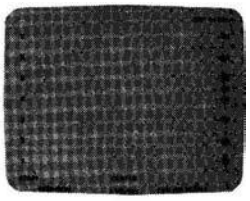

5020-8566

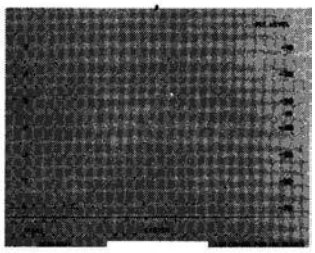

5020-8567

FIGURE 1-1. HP MODEL 8559A SPECTRUM ANALYZER AND ACCESSORIES SUPPLIED

SECTION I
GENERAL INFORMATION

1-1. INTRODUCTION

1-2. This Operation and Service manual contains information required to install, operate, test, adjust, and service the Hewlett-Packard 8559A Spectrum Analyzer. Figure 1-1 shows the instrument and accessories supplied. This section covers instrument identification, description, options, accessories, specifications, and other basic information.

1-3. DESCRIPTION

1-4. The HP 8559A displays the amplitude and frequency of each component of an input signal on a CRT. This display gives quantitative information often not available from a conventional oscilloscope. The HP 8559A is capable of measuring signals from −112 dBm to +30 dBm over a frequency range of 10 MHz to 21 GHz.

1-5. The complete measuring system includes the HP 8559A Spectrum Analyzer plugged into a compatible Hewlett-Packard display mainframe.

1-6. MANUAL ORGANIZATION

1-7. This manual is divided into eight sections as follows:

SECTION I, GENERAL INFORMATION; contains the instrument description and specifications, explains accessories and options, and lists recommended test equipment.

SECTION II, INSTALLATION AND OPERATION VERIFICATION; contains information concerning initial mechanical inspection, preparation for use, operating environment, packaging and shipping, and operation verification.

SECTION III, OPERATION; contains detailed operating instructions for operation of the instrument.

SECTION IV, PERFORMANCE TESTS; contains the necessary tests to verify that the electrical operation of the instrument is in accordance with published specifications.

SECTION V, ADJUSTMENTS; contains the necessary adjustment procedures to properly adjust the instrument after repair.

SECTION VI, REPLACEABLE PARTS; contains the information necessary to order parts and/or assemblies for the instrument.

SECTION VII, MANUAL BACKDATING CHANGES; contains backdating information to make this manual compatible with earlier equipment configurations.

SECTION VIII, SERVICE; contains schematic diagrams, block diagrams, component location illustrations, circuit descriptions, and troubleshooting information to aid in repair of the instrument.

1-8. On the title page of this manual, below the manual part number, is a microfiche part number. This number may be used to order 4- by 6-inch microfilm transparencies of the manual. Each microfiche contains up to 60 photo-duplicates of the manual pages. The microfiche package also includes the latest Manual Updating supplement.

1-9. SPECIFICATIONS

1-10. Instrument specifications are listed in Table 1-1. These specifications are the performance standards or limits against which the instrument is tested. Table 1-2 lists supplemental characteristics. Supplemental characteristics are not specifications but are typical characteristics included as additional information for the user.

NOTE

To ensure that the HP 8559A meets the specifications listed in Table 1-1, performance tests (Section IV) should be performed every six months.

1-11. SAFETY CONSIDERATIONS

1-12. Before operating this instrument, you should familiarize yourself with the safety markings on the instrument and safety instructions in this manual. This instrument has been manufactured and tested according to international safety standards. However, to ensure safe operation of the instrument and personal safety of the user and service personnel, the cautions and warnings in this manual must be followed. Refer to the summary of safety considerations at the beginning of this section. Refer also to individual sections of this manual for detailed safety notation concerning the use of the instrument as described in those individual sections.

1-13. INSTRUMENTS COVERED BY MANUAL

1-14. Serial Numbers

1-15. Attached to the rear of this instrument is a mylar serial number label. The serial number is in two parts. The first four digits and letter are the serial number prefix; the last five digits are the suffix. (Refer to Figure 1-2.) The prefix is the same for all identical instruments; it changes only when a change is made to the instrument. The suffix, however, is assigned sequentially and is different for each instrument. The contents of this manual apply to

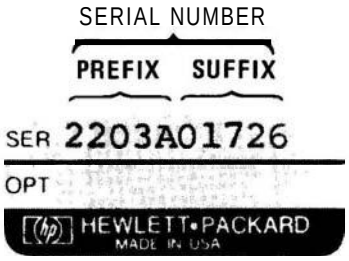

FIGURE 1-2. TYPICAL SERIAL NUMBER LABEL

instruments with the serial number prefix(es) listed under SERIAL NUMBERS on the title page.

1-16. Manual Updating Supplement

1-17. An instrument manufactured after the printing of this manual might have a serial number prefix that is not listed on the title page. This unlisted serial number prefix indicates the instrument is different from those described in this manual. The manual for this newer instrument is accompanied by a yellow Manual Updating supplement. This supplement contains change information that explains how to adapt the manual to the newer instrument.

1-18. In addition to change information, the supplement may contain information for correcting errors in the manual. To keep this manual as current and accurate as possible, Hewlett-Packard recommends that you periodically request the latest Manual Updating supplement. The supplement carries a manual identification block that includes the model number, print date of the manual, and manual part number. Complimentary copies of the supplement are available from Hewlett-Packard. Addresses of Hewlett-Packard offices are located at the back of this manual.

1-19. Manual Backdating Changes

1-20. Instruments manufactured before the printing of this manual have been assigned serial number prefixes other than those for which this manual was written directly. Manual backdating information is provided in Section VII to adapt this manual to earlier serial number prefixes.

1-21. This information should not be confused with information contained in the yellow Manual Updating supplement, which is intended to adapt this manual to instruments manufactured after the printing of this manual.

1-22. ACCESSORIES SUPPLIED

1-23. A type-N male to BNC female adapter, HP Part Number 1250-0780, is supplied with the standard instrument for the use of lightweight cables with BNC connectors.

1-24. Side stop kit, HP Part Number 08558-60031, is supplied to prevent the spectrum analyzer from sliding out of the mainframe. When the side stops are installed, the plug-in cannot be removed from the mainframe. Refer to Section II for installation or removal of the side stops.

1-25. Three graticule overlays provide the operator with reference level labels for the CRT. HP Part Number 5020-8565 is the overlay for HP 180-series display mainframes. HP Part Number 5020-8566 is the overlay for HP 181-series display mainframes. HP Part Number 5020-8567 is the overlay for HP 182-series display mainframes. For proper installation of the graticule overlay, refer to Section II

TABLE 1-1. HP MODEL 8569A SPECIFICATIONS (1 OF 4)

SPECIFICATIONS

FREQUENCY SPECIFICATIONS

FREQUENCY RANGE

10 MHz to 21 GHz, covered in six pushbutton-selectable ranges:

Frequency Band GHz	Mixing Mode (n)	Lowest Freq (GHz) [ALT IF]	Highest Freq (GHz)
.01 – 3	1 –	0.010 [0.025]	3.060
6 – 9	1 +	6.035 [6.020]	9.060
3 – 9	2 –	3.033 [3.048]	9.120
9 – 15	2 +	9.058 [9.043]	15.120
6 – 15	3 –	6.055 [6.070]	15.180
12.1 – 21	3 +	12.080 [12.065]	21.000

FREQUENCY SPANS

Full Span (F)
Entire frequency band displayed with frequency of tunable marker indicated by Frequency GHz readout.

Per Division (MHz/Div, kHz/Div)
14 frequency scale calibrations in 1-2-5 sequence from 10 kHz/div to 200 MHz/div. Center frequency is set with the TUNING control and indicated by the FREQUENCY GHz readout.

Zero Span (0)
Analyzer functions as a manually tuned receiver, at the frequency indicated by the FREQUENCY GHz readout, for time-domain display of signal modulation.

FREQUENCY ACCURACY

Tuning Accuracy
Frequency GHz readout (center or marker frequency), after zeroing on the LO feedthrough:
0.01 – 3.0 GHz: ± (1 MHz + 0.3% of center frequency)
3.0 – 21.0 GHz: ± (5 MHz + 0.2% of center frequency)

Frequency Readout Resolution
1 MHz

Frequency Span Accuracy
± 5% of displayed frequency separation

SPECTRAL RESOLUTION AND STABILITY

Resolution Bandwidths
Eight selectable resolution (3-dB) bandwidths in 1-3 sequence from 1 kHz to 3 MHz. Bandwidth may be selected independently or coupled with frequency span. Optimum ratio of frequency span to resolution bandwidth is indicated by alignment of markers (><) on the two controls.

Resolution Bandwidth Accuracy:
Individual resolution bandwidth 3-dB points:
< ±15% (<±30% for 3-MHz bandwidth)

Selectivity:
60-dB/3-dB resolution bandwidth ratio: <15:1

Stability
For fundamental mixing (n = 1 – or 1 +):
Residual FM:
<2 kHz p-p in 0.1 second'
Noise Sidebands:
≥70 dB down, >30 kHz from center of CW signal with 1 kHz resolution bandwidth and video filter at MAX (not in detent).
Video Filter
Post-detection low-pass filter averages displayed noise for a smooth trace. The MAX (detent) position selects a video filter bandwidth of approximately 1.5 Hz for noise level measurement.

AMPLITUDE SPECIFICATIONS

AMPLITUDE RANGE

– 111 dBm to + 30 dBm.

'<2 kHz p-p in 0.1 second in a 180-series display mainframe with 220/240 line voltage.

TABLE 1-1. HP MODEL 8559A SPECIFICATIONS (2 OF 4)

Maximum Input (without damage) Levels
Total Power:
+20 dBm (O.lW, 2.2 Vrms) with 0 dB input attenuation
+30 dBm (lW, 7.1 Vrms) with ≥10 dB input attenuation
DC: ±7.1V
AC (<I00 Hz): 7.1 Vrms
Peak Pulse Power:
+50 dBm (100W, <10 μsec pulse width, 0.01% duty cycle) with input attenuation ≥ 30 dB

Gain Compression
<0.5 dB for a –10 dBm input level with 0 dB input attenuation.

Average Noise Level
The displayed average noise level determines sensitivity (minimum discernible signal). Signals at this input level peak approximately 3 dB above the displayed noise.
Maximum average noise level with 1 kHz resolution bandwidth, 0 dB input attenuation, and video filter at MAX (detent):

Frequency Band (GHz)	Harmonic Mode	Average Noise Level (dBm)
01 — 3	1 –	– 111
6 — 9	1 +	– 108
3 — 9	2 –	– 103
9 — 15	2 +	– 98
6 — 15	3 –	– 93
121 — 18	3 +	– 92
18 — 21	3 +	– 90

Calibrated Display Range
Log (from Reference Level):
70 dB with 10 dB/DIV Amplitude Scale
8 dB with 1 dB/DIV Amplitude Scale
Linear:
8 divisions with LIN Amplitude Scale

AMPLITUDE ACCURACY
With AUTO sweep time selected, amplitude accuracy is determined by one or more of the following factors, depending on the measurement technique.'

Calibrator Output
– 10 dBm ± 0.3 dB (into 50Ω)
35 MHz ± 400 kHz

Reference Level
10-dB steps and a 12-dB vernier for calibrated Reference Level adjustment from – 112 dBm to +60 dBm.'
Step Accuracy (with 0 dB input attenuation):
– 10 dBm to – 80 dBm: ±0.5 dB
-10 dBm to -100 dBm: ±1.0 dB
Vernier Accuracy:
±0.5 dB

Frequency Response
Frequency response, measured with 0 or 10 dB input attenuation, includes input attenuator flatness, mixer flatness, and band-to-band amplitude variation:

Frequency Band GHz	Frequency Response (± dB MAX.)
01 — 3	1 0
6 — 9	1 0
3 — 9	1 5
9 — 15	1 8
6 — 15	2 1
121 — 18	2 3
18 — 21	3 0

Input Attenuator
0 dB to 70 dB of input attenuation selectable in 10-dB steps
Step Accuracy:
0 dB to 60 dB, 0.01 to 18.0 GHz: <±1.0 dB per 10 dB step
Maximum Cumulative Step Error:
0 dB to 60 dB, 0.01 to 18.0 GHz: <±2.4 dB

Bandwidth Switching (Amplitude Variation)
Bandwidths 3 MHz to 300 kHz: <±0.5 dB
Bandwidths 3 MHz to 1 kHz: <±1.0 dB

2 When switching to or from the Alternate IF, the REF LEVEL CAL and the FREQ CAL should be readjusted. Without readjustment, an additional reference level error of ±1 dB and an additional frequency readout error of ±1 MHz may result.

'1 Input level not to exceed maximum levels.

TABLE 1-1. HP MODEL 8559A SPECIFICATIONS (3 OF 4)

Display Fidelity
CRT linearity and log or linear fidelity affect amplitude accuracy at levels other than Reference Level.
Log Incremental Accuracy:
±0.1 dB per dB from Reference Level
Log Maximum Cumulative Error:
≤±1.5 dB over entire 70-dB range
Linear Accuracy:
±3% of Reference Level

RESIDUAL RESPONSES
< -90 dBm (0.01 – 3.06 GHz)[4] with 0 dB input attenuation and no signal present at input.

SWEEP SPECIFICATIONS

SWEEP TIME
Automatic (AUTO):
Sweep time adjusted automatically to maintain absolute amplitude calibration for any combination of frequency span, resolution bandwidth, and video filter bandwidth.

Calibrated Sweep Times (sec/Div, mSec/Div, μSec/Div):
20 selectable sweep times in 1-2-5 sequence from 2 μsec/div to 10 sec/div (excluding 2 sec/div), provided primarily for time-domain calibration in zero span (0).
Sweep time accuracy: ±10% (±20% for 5 and 10 sec/div)

GENERAL SPECIFICATIONS

TEMPERATURE RANGE
Operating: 0°C to +55°C
Storage: –40°C to +75°C

HUMIDITY RANGE
Type-tested from 50% to 95% relative humidity (≤+40°C) per requirements of MIL-STD-810C, Method 507.1, Procedure IV.

[4] 0.025 – 3.06 GHz with ALT IF selected.

EMI
Conducted and radiated interference is in compliance with MIL-STD 461A, Methods CEO3 and RE02, CISPR Publication 11 (1975) and Messempfaenger Postverfuegung 526/527/79 (Kennzeichnung Mit F-Nummer/Funkschutzzeichen).

POWER REQUIREMENTS
HP Model 853A Display with HP Model 8559A Spectrum Analyzer:
100 or 120 Vac +5% –10%, 48 to 66 Hz, single-phase. Power consumption less than 200 Volt-amperes with plug-in installed.
HP Model 182T/180TR Display with HP Model 8559A Spectrum Analyzer:
115 or 230 Vac ±10%, 48-440 Hz. Power consumption less than 200 Volt-amperes with plug-in installed, convection cooled.
HP Model 181T/181TR Display with HP Model 8559A Spectrum Analyzer:
115 or 230 Vac ±10%, 48-440 Hz. Power consumption less than 225 Volt-amperes with plug-in installed, convection cooled.

WEIGHT
HP Model 8559A Spectrum Analyzer:
Net: 5.5 kg (12.1 lbs)
Shipping: 9.1 kg (20 lbs)
HP Model 853A Display:
Net: 15.9 kg (35 lbs)
Shipping: 18.6 kg (41 lbs)
HP Model 853A Option 001 Display:
Net: 14.5 kg (32 lbs)
Shipping: 17.3 kg (38 lbs)
HP Model 182T Display:
Net: 12.5 kg (27 lbs)
Shipping: 16.5 kg (36 lbs)
HP Model 181T Display:
Net: 11.0 kg (24 lbs)
Shipping: 15.5 kg (34 lbs)
HP Model 181TR Display:
Net: 12.0 kg (26 lbs)
Shipping: 17.5 kg (38 lbs)
HP Model 180TR Display:
Net: 12.0 kg (26 lbs)
Shipping: 17.5 kg (38 lbs)

TABLE 1.1. HP MODEL 8559A SPECIFICATIONS (4 OF 4)

DIMENSIONS

HP Model 8559A Spectrum Analyzer:

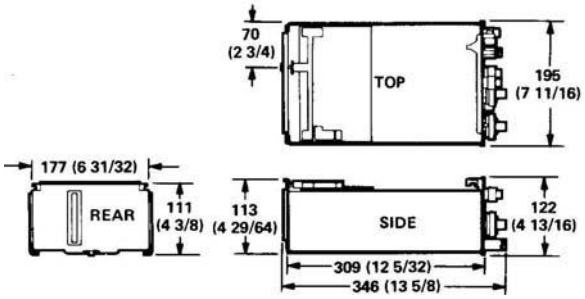

HP Model 182T Display:

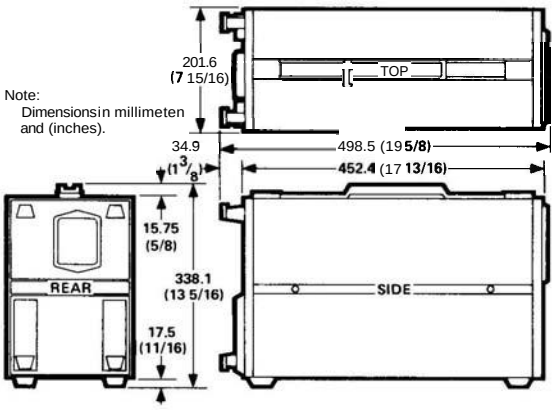

HP Model 853A Display:

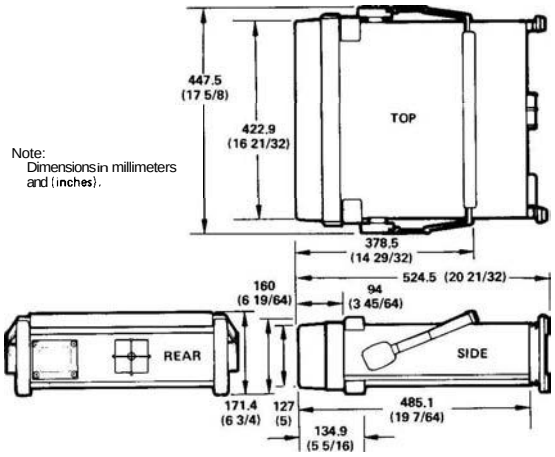

HP Model 181T Display:

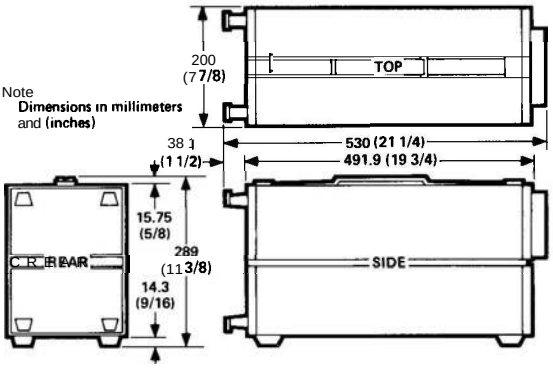

HP Model 853A Option 001 Display:

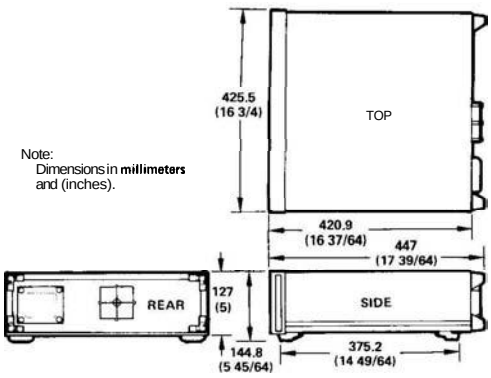

HP Model **180TR/181TR** Display:

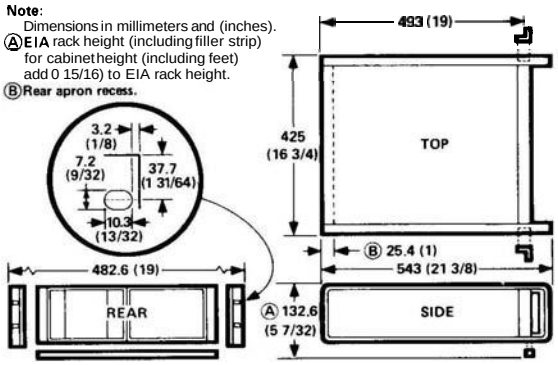

TABLE 1-2. MODEL 8559A/180-SERIES SUPPLEMENTAL CHARACTERISTICS (1 OF 3)

SUPPLEMENTAL CHARACTERISTICS

NOTE: Values in this table are not specifications. They are typical characteristics included for user information.

FREQUENCY CHARACTERISTICS

FREQUENCY ACCURACY
Frequency Cal
Adjusts digital FREQUENCY GHz readout. FREQUENCY CAL control may be used to calibrate the frequency readout on a known signal or on the 35 MHz CAL OUTPUT signal.

FREQUENCY RANGE
Alternate IF
Regular IF approximately 3.0075 GHz. Alternate IF available at approximately 2.9925 GHz for all frequency bands (minimum frequency 25 MHz).

SPECTRAL RESOLUTION AND STABILITY
Frequency Drift
(Fundamental mixing – n = 1 – or 1 +)
At fixed center frequency after 2-hour warmup:
< ±25 kHz/10 minutes
With temperature changes:
<200 kHz/°C

Resolution Bandwidth Shape
Approximately gaussian (synchronously tuned, 4-pole filter).

Spectral Resolution
The following graph shows typical spectrum analyzer resolution for different resolution bandwidths.

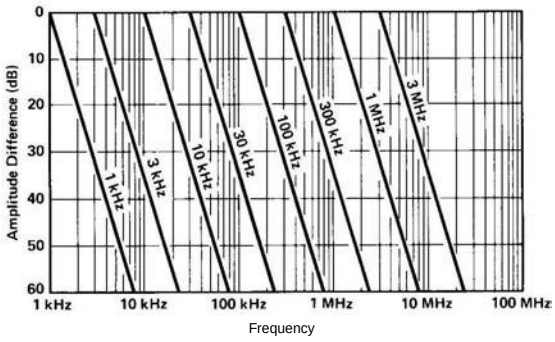

SIGNAL RESOLUTION VS. FREQUENCY SEPARATION

AMPLITUDE CHARACTERISTICS

AMPLITUDE RANGE AND ACCURACY
Dynamic Range
Maximum power ratio of two signals simultaneously present at the input that may be measured within the limits of specified accuracy, sensitivity, and distortion (i.e., spurious responses): >70 dB.

Frequency Response and Average Noise Level
The following graph shows typical frequency response and average noise level versus frequency.

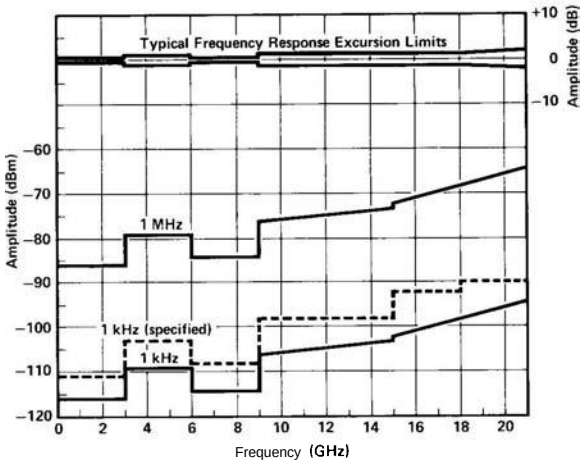

AVERAGE NOISE LEVEL AND FREQUENCY RESPONSE

Amplitude Scale Switching
Reference Level variation is typically less than +/–1 dB for any change in Amplitude Scale.

SPURIOUS RESPONSES
(with 0 dB input attenuation)
Second Harmonic Distortion

Input Power	Relative Distortion
–40 dBm	<–70 dB

TABLE 1-2. MODEL 8559A/180-SERIES SUPPLEMENTAL CHARACTERISTICS (2 OF 3)

SUPPLEMENTAL CHARACTERISTICS

NOTE: Values in this table are not specifications. They are typical characteristics included for user information.

Third Order Intermodulation Distortion

For Two Input Signals with		Relative Disortion
Input Power	Signal Sep.	
–30 dBm	50 kHz	<–70 dB

Signal Identifier
Signal identifier provided over entire frequency range and in all Frequency Span/Div settings. Correct signal response is a 1 MHz shift to the left and approximately 6 dB lower amplitude.

SWEEP CHARACTERISTICS

MANUAL SWEEP
Spectrum analyzer may be swept manually, in either direction, with front panel control.

SWEEP TRIGGER
Free Run
End of each sweep triggers new sweep.

Line
Sweep triggered at ac line frequency.

Video
Sweep triggered on post-detection video wave form. One-half major division of vertical deflection required to trigger sweep.

Single
Single sweep started or reset by turning SWEEP TRIGGER clockwise momentarily.

FRONT PANEL INPUT AND OUTPUT CHARACTERISTICS

SIGNAL INPUT
Input Impedance
50 ohms nominal; Precision Type N female connector.

Input SWR
<2.0 SWR with 0 dB input attenuation
<1.3 SWR with ≥10 dB input attenuation

LO Emission (3.0 – 6.1 GHz)
≤ – 8 dBm with 0 dB input attenuation

REAR PANEL OUTPUT CHARACTERISTICS'

VERTICAL, PENLIFT/BLANKING, AND HORIZONTAL OUTPUTS (AUX A, B, D)
These outputs are compatible with and may be used to drive HP X-Y Recorders (using positive pen coils or TTL pen lift input) and CRT monitors.

AUX A VERTICAL OUTPUT
BNC output provides detected video signal from a 50-ohm output impedance. Typical 0 – 800 mV range corresponds to full 8-division CRT vertical deflection.

AUX B PEN LIFT/BLANKING OUTPUT
BNC output provides a +15V pen lift/blanking signal from a 10K-ohm output impedance when CRT trace is blanked. Otherwise, output is low at 0V (low impedance, 150 mA max.) for an unblanked trace.

'Rear panel outputs refer to 180T-series display mainframes and other 180-series mainframes with Option 807 installed. Horizontal, vertical, and blanking outputs, attenuated and shifted in dc level, are available on other 180-series mainframes at the MAIN SWEEP, MAIN GATE, and DELAYED GATE outputs, respectively. DO NOT connect an X-Y recorder to the DELAYED GATE OUTPUT, or damage will result.

TABLE 1-2. MODEL 8559A/180-SERIES SUPPLEMENTAL CHARACTERISTICS (3 OF 3)

SUPPLEMENTAL CHARACTERISTICS

NOTE: Values in this table are not specifications. They are typical characteristics included for user information.

AUX C 21.4 MHz IF OUTPUT

BNC output provides 21.4 MHz IF signal (linearly related to spectrum analyzer RF input) from a 50-ohm output impedance. Output bandwidth controlled by spectrum analyzer RESOLUTION BW setting; output amplitude controlled by INPUT ATTEN, REFERENCE LEVEL FINE, and first six REFERENCE LEVEL positions (i.e., −10 through −60 dBm with 0 dB input attenuation). Output level is approximately −10 dBm into 50 ohms with a signal displayed at Reference Level.

AUX D HORIZONTAL OUTPUT

BNC output provides horizontal sweep voltage from a SK-ohm output impedance. −5V to +SV range corresponds to full 10-division CRT horizontal deflection.

1-26. EQUIPMENT REQUIRED BUT NOT SUPPLIED

1-27. Display Mainframe

1-28. An HP 853A digital Spectrum Analyzer Display is recommended for use with the HP 8559A. The rear panel of the HP 853A mainframe provides the following output connections: HORIZ (SWEEP), VERTICAL (VIDEO), BLANK (PENLIFT), 21.4 MHz IF, and HP-IB interface connector.

1-29. An HP 180T-series display mainframe (180TR, 181T, 181TR, or 182T) is also designed for use with the HP 8559A. In the HP 180T-series mainframe, the rear-panel auxiliary output connectors (AUX A, AUX B, AUX C, and AUX D) provide, respectively, Vertical Output, Pen Lift Output, 21.4 MHz IF Output, and Horizontal Output. A standard HP 180-series display mainframe (HP 180A/AR, HP 180C/D, HP 181A/AR, HP 182A/C, or HP 184A/B) provides only horizontal, vertical, and blanking rear panel outputs. Furthermore, these outputs are attenuated and shifted in dc level. Unbuffered rear panel outputs (similar to the HP 180T-series) are provided only if Option 807 is installed.

1.30. Extender Cable Assembly

1-31. An Extender Cable Assembly (Figure 1-3), HP Part Number 5060-0303, allows operation of the HP 8559A outside the display mainframe. This provides access to the HP 8559A for necessary adjustments and some performance tests. This cable is also useful for troubleshooting.

1-32. EQUIPMENT AND ACCESSORIES AVAILABLE

1-33. Input Limiter

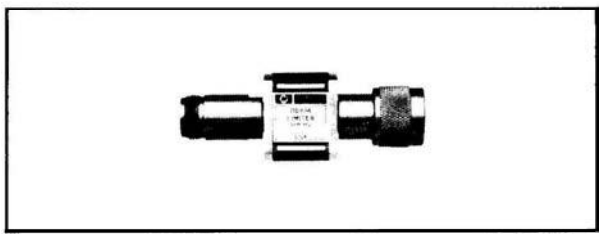

FIGURE 1-3. HP 11683A LIMITER

1-34. The HP 11693A Limiter can be used with the HP 8559A to prevent input mixer damage due to inadvertent application of strong signals. Frequency response flatness is degraded by less than ±0.5 dB from 100 MHz to 12.4 GHz; the limiter is usable from 10 MHz to 18 GHz. Input levels of 1 watt average or 75 watts peak can be tolerated.

1.35. Low Pass Filter

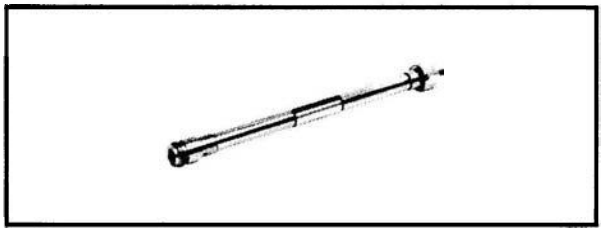

FIGURE 1-4. HP 11870A LOW PASS FILTER

1-36. The HP 11870A Low Pass Filter (dc-2.6 GHz) can be used with the HP 8559A to reject signals above 3 GHz by more than 60 dB for image free measurements over the 10 MHz to 2.6 GHz range.

1-37. Modification Kit (Option 807 Connections)

1-38. A modification kit, HP Part Number 00180-69503, provides the materials and information necessary to install unbuffered rear panel connections (formerly included in Option 807) in the following display mainframes: HP 180A/AR, HP 180C/D, HP 181A/AR, HP 182A/C, and HP 184A/B. Refer to Table 1-3 for a description of parts included in the modification kit.

1-39. Oscilloscope Camera

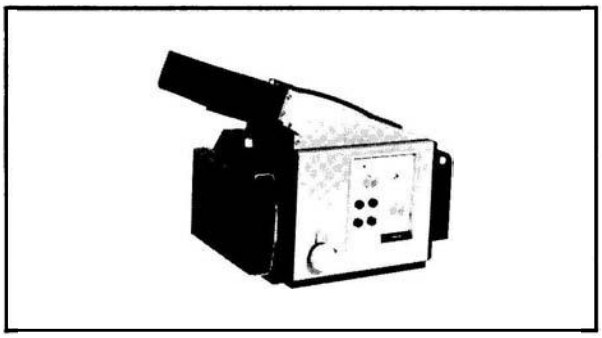

FIGURE 1-5. HP 197B Opt 002,006 OSCILLOSCOPE CAMERA

1-40. The HP 197B, Option 002, General Purpose Camera can be used with HP 180- and HP 181-series display mainframes to make a permanent record of measurements. The HP 10367A adapter allows the camera to be used with HP 182-series mainframes.

TABLE 1-3. PARTS INCLUDED IN MODIFICATION KIT 00180-69503

Quantity	Description	HP Part Number
1	Output Amplifier Assembly (Auxiliary Output Board)	0018-066551
1	Label	7120-3116
2	3/4 inch pieces of shrink tubing	0890-0720
1	Service Note	180A/AR-10, 180C/D-2, 181A/AR8, 182A/C-1, or 184/B-1 (modification is similar for all instruments listed)

1-41. SERVICE ACCESSORIES

1-42. Service accessories are shown in Figure 1-6.

1-43. RECOMMENDED TEST EQUIPMENT

1-44. Table 1-4 lists all of the equipment required for testing, adjusting and troubleshooting the Hewlett-Packard Model 8559A Spectrum Analyzer. Other equipment may be substituted if it meets or exceeds the critical specifications listed in the table.

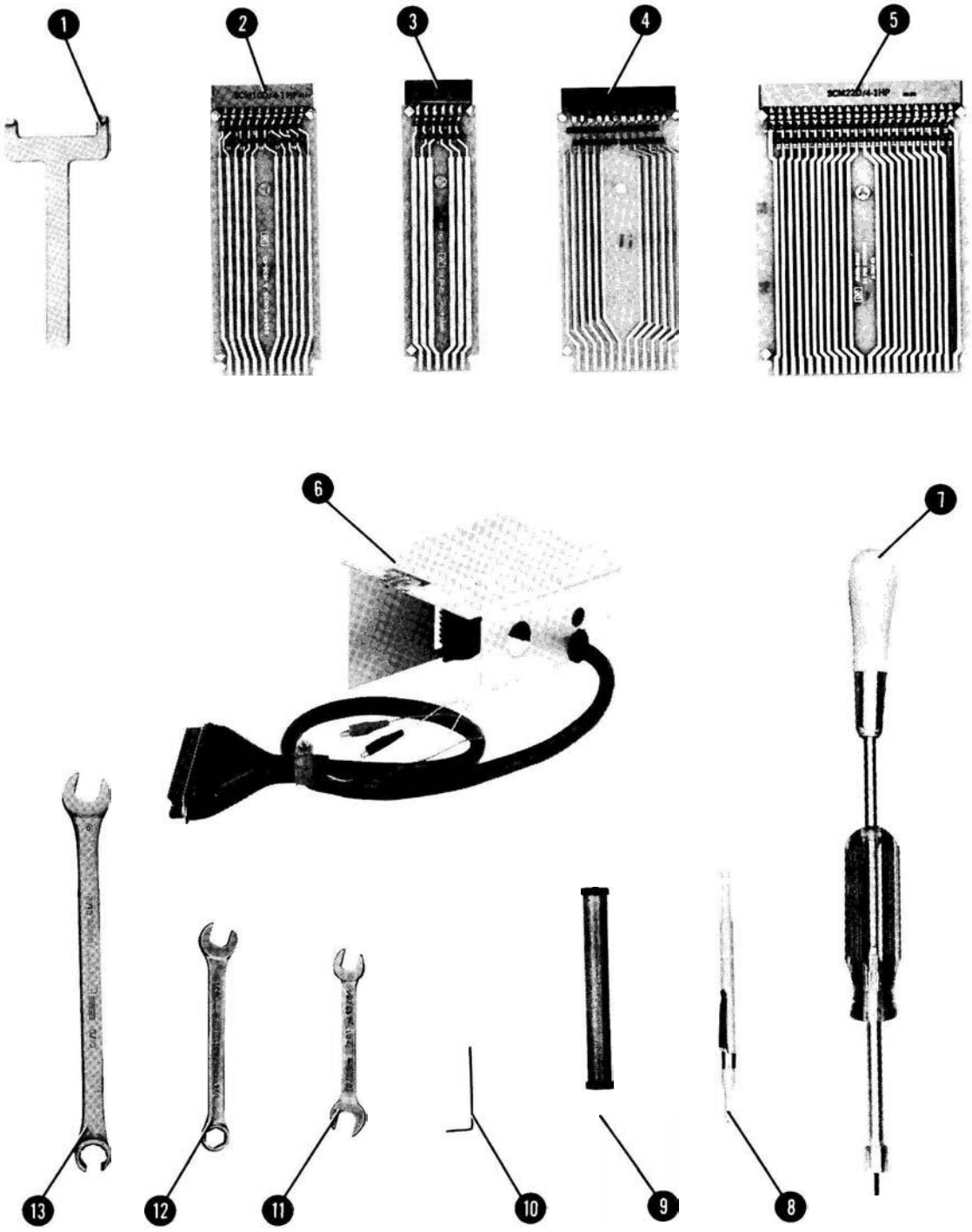

FIGURE 16. SERVICE ACCESSORIES (1 OF 2)

Item	Description	CD	HP Part Number
1	Board Puller, 2 prongs to lift PC boards	1	03950-4001
2	Extender Board, 6 pin, 12 contacts	8	08505-60109
3	Extender Board 10 pin, 20 contacts	2	85680-60028
4	Extender Board, 12 pin, 24 contacts	2	08559-60042
5	Extender Board 22 pin, 44 contacts	8	08565-60107
6	Extender Cable Assembly for plug-in operation out of display mainframe	9	5060-0303
7	Tuning Tool, modified 5/16 inch nut driver with modified No. 10 Allen driver	6	08555-60107
8	Alignment tool, metal tip in plastic	7	8710-0630
9	Alignment tool, non-metallic	4	8710-0033
10	Wrench, No 2 Bristol	0	8710-0055
11	Wrench, 15/64 inch, combination	8	8710-0946
12	Wrench, 1/4 inch, open end	2	8720-0014
13	Wrench, 5/16 inch, slotted box end/open end	9	08555-20097

FIGURE 1-6. SERVICE ACCESSORIES (2 OF 2)

TABLE 1-4. RECOMMENDED TEST EQUIPMENT (1 OF 4)

Instrument	Critical Specifications	Recommended Model	Use*
Display Mainframe	HP 180 Series with Variable Persistence	HP 181 T/TR	P, A, T
Sweep Oscillator	Mainframe for RF Plug-Ins below. External Sweep Adjustable Sweep range (Marker Sweep)	HP 8620C	P, A
RF Plug-In	Compatible with mainframe above. Output Frequency: 0.01 to 2.4 GHz Output Amplitude: 0 to +10 dBm adjustable FM and Phase Lock Internal and External leveling (both crystal detector and power meter)	HP 86222A/B	P, A
RF Plug-In	Compatible with mainframe above. Output Frequency: 2 to 21 GHz Output Amplitude: Band 1, 0 to +10 dBm adjustable Band 2, 0 to +10 dBm adjustable Band 3, 0 to +3 dBm adjustable Band 4, 0 to +3 dBm adjustable FM and Phase Lock Internal and External leveling (both crystal detector and power meter)	HP 86290B-H08[1]	P, A
Signal Generator	Output Frequency: 21.4 MHz and 321.4 MHz Output Amplitude: −40 to 0 dBm adjustable	HP 8640B	P, A, T
Function Generator	Output Frequency: 1 Hz to 1 MHz adjustable Output Amplitude: 0 to 15V p-p adjustable Triangle Wave Output	HP 3310A	P, A
Comb Generator	1 MHz comb teeth to 3 GHz 100 MHz comb teeth to 21 GHz	HP 8406A	P, A
Spectrum Analyzer	Frequency Range 20 MHz to 6 GHz Maximum Input Level: ⩾0 dBm Amplitude Scale: Log 10 dB/DIV and 1 dB/DIV Minimum Resolution Bandwidth: ⩽300 kHz Adjustable Reference Level	HP 8569B	A, T
Synchronizer	Input Frequency: 21.4 MHz Sensitivity: 6 MHz/Volt Error Voltage Output Polarity: + and − Selectable	HP 8709A-H10[2]	A

*P = Performance Test; A = Adjustments; T = Troubleshooting
[1] Option H08 extends the frequency range of the standard HP 86290B from 18.6 GHz to 22 GHz. A standard (18.6 GHz) may be used if Option H08 (22 GHz) is not available.
[2] Option H10 changes input frequency to 21.4 MHz and adds error voltage output polarity selection capability.

TABLE 1-4. RECOMMENDED TEST EQUIPMENT (2 OF 4)

instrument	Critical Specifications	Recommended Model	Use*
Oscilloscope	Frequency: 500 Hz Display Amplitude: –15 Vdc Single Channel	HP 1740A	A, T
Frequency Counter	Frequency Range 20 MHz to 23 GHz Sensitivity: –15 dBm Resolution: 0.1 MHz	HP 5342A-005	P, A, T
Universal Counter	Time Interval Measurement from 1 ms to 500 ms	HP 5300B/5302A	P, A
Digital Voltmeter	Range: –12 to +15 Vdc Accuracy: ±1 mV	HP 3456A	P, A, T
Power Meter	Range –20 to +10 dBm Resolution: 0.1 dB	HP 435A/B	P, A
Power Sensor	Frequency Range: 50 MHz to 26.5 GHz Maximum SWR: 1.15, 50 MHz to 100 MHz 1.10, 100 MHz to 2 GHz 1.15, 2 to 12.4 GHz 1.20, 12.4 to 18 GHz 1.25, 18 to 26.5 GHz	HP 8485A	P, A
Power Sensor	Frequency Range 10 MHz to 18 GHz Maximum SWR: 1.40, 10 MHz to 30 MHz 1.18, 30 MHz to 50 MHz 1.10, 50 MHz to 2 GHz 1.18, 2 to 12.4 GHz 1.28, 12.4 to 18 GHz	HP 8481A	P, A
Power Splitter	Frequency Range: 10 MHz to 18 GHz Tracking between output arms: ≤0.25 dB Connectors: Type N (f) input, Type N (m) outputs	HP 11667A-C16[3]	P, A
Step Attenuator	Frequency Range: 20 MHz to 350 MHz Attenuation Range: 0 to 90 dB in 10 dB steps Step Accuracy: k0.1 dB Overall Accuracy (0 to 90 dB): ±0.2 dB	HP 355D-H82[4]	P, A
Step Attenuator	Frequency Range: 20 MHz to 350 MHz Attenuation Range: 0 to 12 dB in 1 dB steps Step Accuracy: k0.05 dB Overall Accuracy (0 to 12 dB): k0.1 dB	HP 355C-H80[5]	P, A

*P = Performance Test; A = Adjustments; T = Troubleshooting
[3] Option C16 provides Type N (m) output connectors to eliminate the use of adapters.
[4] Option H82 is selected for best attenuation accuracy and provides calibration data at 30 MHz and 280 MHz.
[5] Option H80 is selected for best attenuation accuracy and provides calibration data at 100 MHz.

TABLE 1-4. RECOMMENDED TEST EQUIPMENT (3 OF 4)

Instrument	Critical Specifications	Recommended Model	Use*
Fixed Attenuator (2 required)	Frequency Range 10 MHz to 18 GHz Attenuation: 20 dB ±1.0 dB Connectors: Type N (m) (f)	HP 8491B Option 020[6]	P, A
Fixed Attenuator	Frequency Range: 10 MHz to 18 GHz Attenuation: 10 dB ±0.5 dB Connectors: Type N (m) (f)	HP 8491B Option 010[6]	P, A
Crystal Detector	Frequency Range: 10 MHz to 21 GHz Frequency Response: ±0.6 dB, .01 to 18 GHz Maximum SWR: ≤1.5, .01 to 18 GHz Output Polarity: Negative Connectors: APC −3.5 (SMR) (m) input, SMC (m) output	HP 33330C	P, A
Termination	Frequency Range: 10 MHz to 18 GHz Impedance: 50 Ω Connector: Type N (m)	HP 909A Option 012[7]	P
Tuning Voltage Circuit	Refer to Figure 5-17	None	A
Crystal Bypass Networks	Refer to Figure 5-6	None	A
Special Extender Board	Refer to Figure 5-9	None	A
Extender Cable	Extends Spectrum Analyzer Plug-In for Servicing Refer to Figure 1-3.	HP 5060-0303	P, A, T
Cable	Frequency Range: 10 MHz to 21 GHz Maximum SWR: ≤1.4 at 21 GHz Length: 61 cm (24 inches) Connectors: SMA (m) both ends	HP 8120-1578	P, A
Cable	BNC (m) to SMC (f), 36 inches long	HP 11592-60001	P, A
Cable	48 inch, 50 Ω coaxial cable with BNC (m) connectors on both ends (3 required)	HP 10503A	P, A, T
Cable	RG-214/U with Type N connectors (2 required)	HP 11500A	P, A
Cable	BNC (m) to Banana Plug	HP 10111A	P, A, T
Test Cable	Connectors: BNC (m) to SMB (f) Length: ≥61 cm (24 inches)	HP 85680-60093	A, T

*P = Performance Test; A = Adjustments; T = Troubleshooting
[6] Option number specifies attenuation value.
[7] Option 012 provides type N male connector.

TABLE 1-4. RECOMMENDED TEST EQUIPMENT (4 OF 4)

Instrument	Critical Specifications	Recommended Model	Use*
Adapter	Type N(m) to BNC (f) (2 required)	HP 1250-0780	P, A, T
Adapter	Type N(m) to SMA (f) (2 required)	HP 1250-1250	P, A
Adapter	Type N(f) to SMA (f) (2 required)	HP 1250-1745	P, A
Adapter	Type N(f) to Type N (f) (2 required)	HP 1250-1472	P, A
Adapter	Type N(f) to BNC (m)	HP 1250-1477	P
Adapter	BNC (f) to SMC (m)	HP 1250-0832	A
Adapter	BNC (f) to BNC (f)	HP 1250-0080	P
Adapter	BNC (f) to alligator clips (2 required)	HP 8120-1292	A, T
Adapter	BNC (f) to SMB (f)	HP 1250-1236	P
Adapter	SMB (m) to SMB (m)	HP 1250-0669	A
Adapter	SMB (f) to SMB (f)	HP 1250-0672	A
Adapter	SMC (m) to SMC (m)	HP 1250-0827	A
Adapter	BNC Tee	HP 1250-0781	P, A
Tuning Tool	Allen Driver inserted through drilled-out 5/16" nut driver	HP 08555-60107	A

*P = Performance Test; A = Adjustments; T = Troubleshooting

SECTION II
INSTALLATION AND OPERATION VERIFICATION

2-1. INTRODUCTION

2-2. This section includes information on initial inspection, preparation for use, and storage and shipping requirements for the HP 8559A.

2-3. INITIAL INSPECTION

2-4. Inspect the shipping container for damage. If the shipping container or cushioning material is damaged, it should be kept until the contents of the shipment have been checked for completeness and the instrument has been checked mechanically and electrically. The contents of the shipment should be as shown in Figure 1-1. The electrical performance is checked by the Operation Verification procedure in this section. If the contents are incomplete, or if the instrument does not pass Operation Verification tests, notify the nearest Hewlett-Packard office. If the shipping container is damaged, or the cushioning materials shows signs of stress, notify the carrier as well as the Hewlett-Packard office. Keep the shipping materials for carrier's inspection. The HP office will arrange for repair or replacement without waiting for claim settlement.

2-5. PREPARATION FOR USE

2-6. Installation

2-7. When properly installed, the spectrum analyzer obtains all necessary power from the display mainframe. The rear panel connector provides the interface.

CAUTION

BEFORE SWITCHING ON THIS INSTRUMENT, make sure it is adapted to the voltage of the ac power source to be used and the proper fuse is installed. Failure to set the ac power input of the instrument for the correct voltage level could cause damage to the instrument when plugged in. Refer to the display mainframe Operation and Service Manual for line voltage and fuse selection.

2-8. To install the spectrum analyzer in the mainframe:

a. Set display mainframe LINE switch to OFF.

b. Pull out lock knob and slide plug-in toward rear of compartment until it is seated firmly in place.

c. Push in lock knob to secure spectrum analyzer in mainframe.

2-9. Side Stop Kits

2-10. Side stops unique to the installation of this instrument into the HP 853A Spectrum Analyzer Display are included with the HP 853A. Refer to the HP 853A Operation and Service Manual for further information.

2-11. Installation of a Side Stop Kit, HP Part Number 08558-60131, prevents the removal of the analyzer from the HP 180-series mainframe without the use of hand tools. This kit contains two side stops, mounting hardware, label, and installation instructions (Refer to Table 2-1 for part numbers of individual items.)

TABLE 2-1. SIDE STOP KIT (08558-60131)

Quantity	Description	HP Part Number	C D
2	SIDE STOP	08558-00094	7
4	MACHINE SCREW, 4-40, .438 IN-LG 82 DEG FLATHEAD	2200-0168	9
1	LABEL, FRONT-PANEL	7120-8131	7
1	LABEL, INSTRUCTIONS	7120-8215	8

2-12. To install side stops:

WARNING

Before removing covers from display mainframe, disconnect line power by removing ac power cord.

1. Remove side covers from bottom section of mainframe. (Remove only right side cover if mainframe is a rack-mounted model.)
2. Use flathead machine screws to install side stops as shown in Figure 2-1.
3. Reinstall side covers on mainframe.
4. Place label on front panel of spectrum analyzer (upper right-hand corner) to indicate that the plug-in is secured with side stops.

2-13. To remove side stops:

WARNING

Before removing covers from display mainframe, disconnect line power by removing ac power cord.

1. Remove side covers from bottom section of mainframe. (Remove only right side cover if mainframe is a rack-mounted model.)
2. Remove side stops. See Figure 2-1.
3. Reinstall side covers on display mainframe.

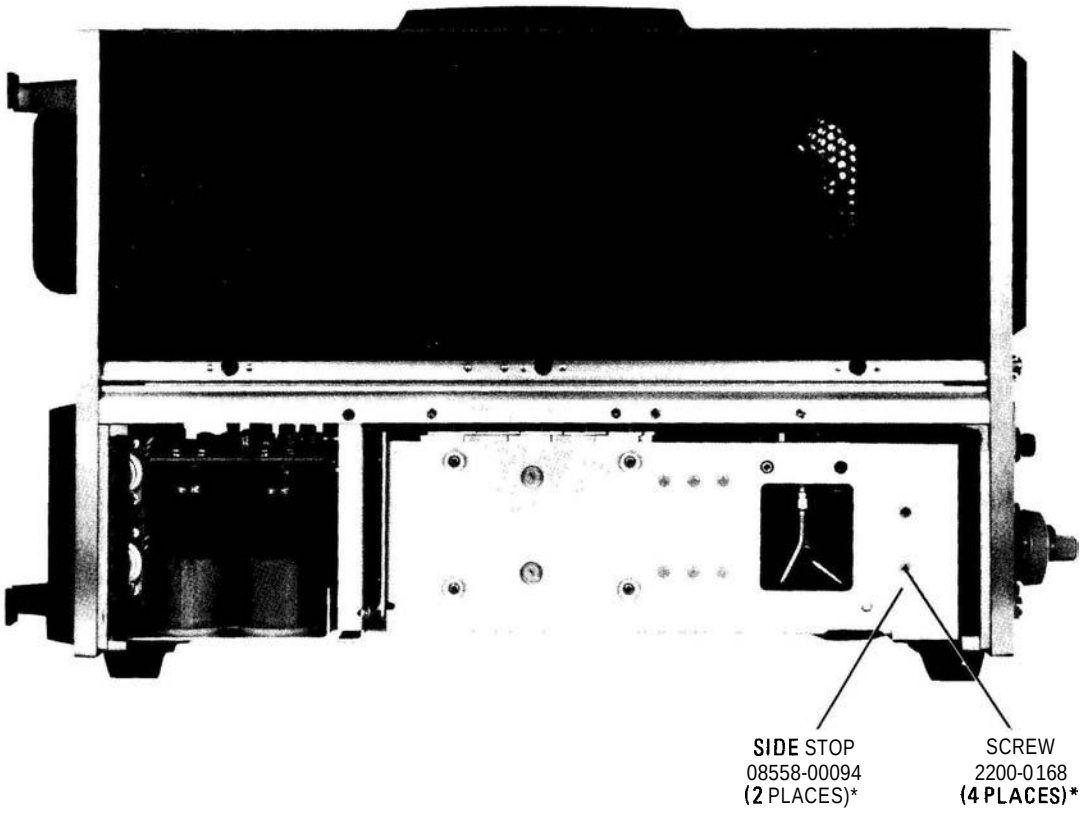

* ONLY ONE SIDE STOP AND TWO SCREWS ARE USED FOR RACKMOUNT MODELS

FIGURE 2-1. LOCATION OF SIDE STOPS

2-14. Graticule Overlays

2-15. To install a graticule overlay:

1. Select proper overlay. HP Part Number 5020-8565 is for HP 180TR display mainframes, HP Part Number 5020-8566 is for HP 181T/TR display mainframes, and HP Part Number 5020-8567 is for HP 182T display mainframes.
2. For HP 180TR and HP 181T/TR mainframes, remove CRT bezel and metallic-mesh contrast filter. Insert proper overlay and replace contrast filter and CRT bezel.
3. For HP 182T mainframes, grasp top portion of CRT bezel and pull straight up. Remove metallic-mesh contrast filter and insert proper overlay and contrast filter. (Either the metallic-mesh contrast filter or a light blue contrast filter may be used.)
4. Slide bezel back into place to retain overlay and filter.

2-16. When the HP 8559A is properly installed in the display mainframe, the interconnections are as listed in Table 2-2.

2-17. Operating Environment

2-18. Temperature. This instrument has been type tested for 95 percent relative humidity at 40°C for five days. The operating environment should be within the following limits:

Temperature ..... 0 to 55°C
Altitude ..... <4572 meters (15,000 feet)

2-19. Modifications

2-20. A Modification Kit, HP Part Number 00180-69503, provides materials and information necessary to add Option 807 rear-panel connections to the standard HP 180-series display. Refer to Table 1-3 in Section I. Option 807 is factory-installed in HP 180TR, HP 181T, HP 181TR, and HP 182T mainframes. The modification kit is required for use with other mainframes if all four rear-panel outputs are needed.

TABLE 2-2. HP MODEL 8559A MAINFRAME INTERCONNECTIONS

Pin on P1	Signal or Voltage	Pin on P1	Signal or Voltage
1	CRT HORIZ (adjusted horizontal signal)	17	BLANKING
2	GROUND from mainframe (jumpered to pin 8)	18	NC
3	NC	19	GROUND from mainframe (jumpered to pin 24)
4	L NORM	20	AUTO SWP
5	Y NORM	21	BEAM FINDER
6	NC	22	NC
7	SING SWP	23	NC
8	GROUND from mainframe (jumpered to pin 2)	24	GROUND from mainframe (jumpered to pin 19)
9	MAN SWP	25	NC
10	NC	26	NC
11	AUX D Horizontal Output (to mainframe rear panel)	27	NC
12	AUX C 21.4MHz IF Output (to mainframe rear panel)	28	−12.6 VDC from mainframe
13	AUX B Penlift/Blanking Output (to mainframe rear panel)	29	+15 VDC from mainframe
14	AUX A Vertical Output (to mainframe rear panel)	30	+100 VDC from mainframe
15	GROUND	31	30V p-p from mainframe (for LINE TRIGGER)
16	NC	32	NC
		W5 (2 contacts)	+VERT (top contact, yellow wire)
			− VERT (bottom contact, orange wire)

2-21. STORAGE AND SHIPMENT

2-22. Environment

2-23. The instrument may be stored or shipped in environments within the following limits:

Temperature: −40°C to +75°C
Altitude: <7620 meters (25,000 feet)

The instrument should also be protected from temperature extremes which cause condensation within the instrument.

2-24. Packaging

2-25. Original Packaging. Containers and materials identical to those used in factory packaging are available through Hewlett-Packard offices. If the instrument is being returned to Hewlett-Packard for servicing, attach a tag indicating the type of service required, return address, model number, and full serial number. A supply of these tags is provided at the end of this section. Also mark the container FRAGILE to assure careful handling. In any correspondence, refer to the instrument by model number and full serial number.

2-26. Other Packaging. The following general instructions should be used for repackaging with commercially available materials:

1. Wrap the instrument in heavy paper or plastic. If shipping to a Hewlett-Packard office or service center, attach a tag indicating the type of service required, return address, model number, and full serial number. A supply of these tags is provided at the end of this section.
2. Use a strong shipping container. A double-wall carton made of 350-pound test material is adequate.
3. Use enough shock-absorbing material (3-inch to 4-inch layer) around all sides of the instrument to provide firm cushion and prevent movement inside the container. Protect the control panel with cardboard.
4. Seal the shipping container securely.
5. Mark the shipping container FRAGILE to assure careful handling.

2-27. OPERATION VERIFICATION

2-28. The Operation Verification tests only the most critical specifications and operating features of the instrument. It requires much less time and equipment than the complete performance tests provided in Section IV, and is recommended for verification of overall instrument operation, either as part of incoming inspection or after repair. Operation Verification consists of the following performance tests:

- Paragraph 4-11, Frequency Span Accuracy
- Paragraph 4-17, Average Noise Level
- Paragraph 4-21, Bandwidth Switching (Amplitude Variation)
- Paragraph 4-22, Input Attenuator Accuracy
- Paragraph 4-25, Calibrator Accuracy
- Paragraph 4-26, Display Fidelity

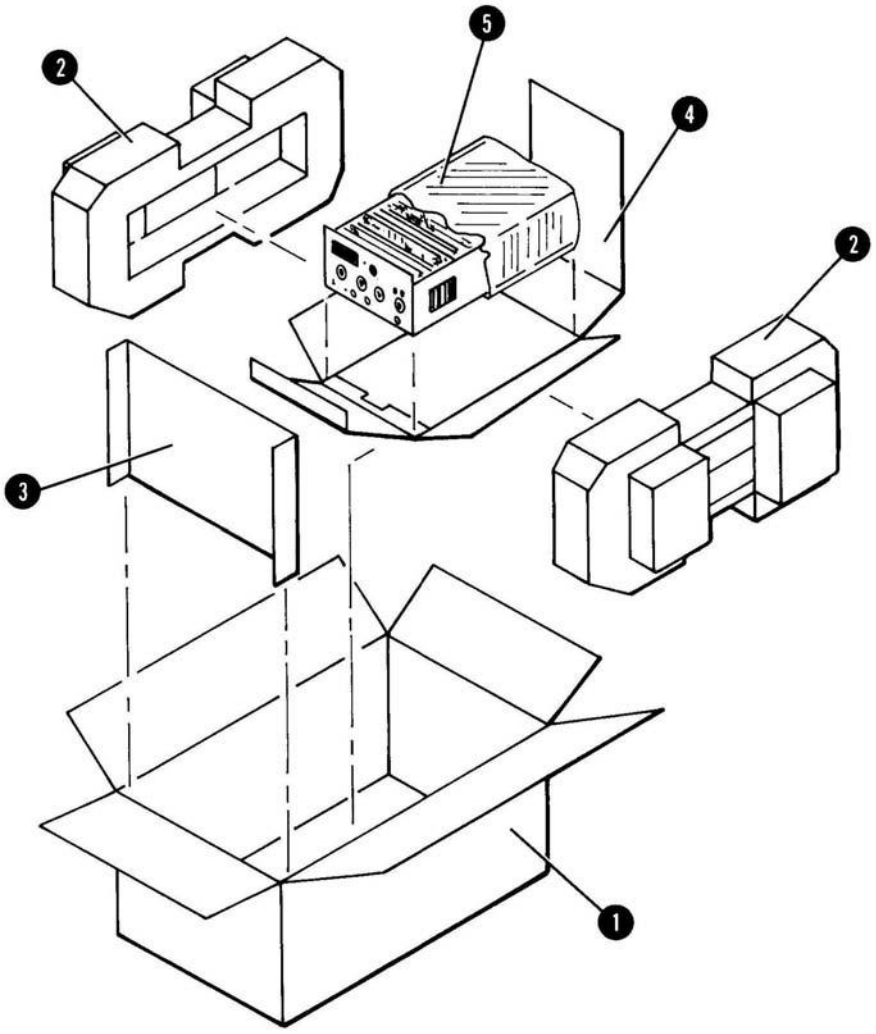

Item	Qty	C D	HP Part No.	Description
1	1	4	9211-3026	CARTON– OUTER
2	2	1	9220-3024	FOAM PADS– INNER
3	1	7	9220-3129	MANUAL PAD – FRONT
4	1	9	9220-3048	CARTON– INNER
5	1	7	9222-1054	BAG – ANTISTATIC

FIGURE 2-2. PACKAGING FOR SHIPMENT USING FACTORY PACKAGING MATERIALS

SECTION III
OPERATION

3-1. INTRODUCTION

3-2. This section provides operating information for the HP 8559A Spectrum Analyzer plug-in. It also provides a brief description of display mainframe controls. For a detailed description of the display mainframe, refer to its manual.

3-3. The HP 8559A Spectrum Analyzer plug-in can be used with either the 180-series display mainframes or the HP 853A Spectrum Analyzer Display mainframe.

3-4. DESCRIPTION

3-5. HP 8559A Spectrum Analyzer

3-6. The HP 8559A employs harmonic mixing to cover a measurement range of 10 MHz to 21 GHz in six frequency bands. It can display frequency spans as narrow as 100 kHz, and as wide as 9 GHz (the latter in full span mode). A five-digit LED readout indicates the spectrum analyzer center frequency with a resolution of 1 MHz. The HP 8559A can be used to measure signals over an amplitude range of −111 dBm to +30 dBm.

3-7. HP 853A Spectrum Analyzer Display

3-8. The HP 853A Spectrum Analyzer Display is a large-screen, digital storage display mainframe for use exclusively with the HP 8559A, 8558B, and 8557A Spectrum Analyzer plug-ins. Digital memory provides buffer storage for two independent traces, both of which can be displayed or blanked as desired. Digital processing also provides push-button features such as maximum signal hold, digital averaging, and trace normalization. A conventional analog display mode can also be selected.

3-9. HP-IB

3-10. The HP 853A has limited HP-IB capabilities. CRT trace and graticule data is dumped directly to a listen-only HP-IB plotter by pressing two front-panel pushbuttons. Control settings on the spectrum analyzer plug-in cannot be monitored via the HP-IB; however, all digital display functions are programmable via a controller, and two lines of annotation can be displayed on the CRT for labelling purposes or operator prompting. In addition, controller commands allow transfer of trace data for analysis or storage.

3-11. CONTROLS, INDICATORS, AND CONNECTORS

3-12. Control Grouping

3-13. The Spectrum Analyzer plug-in and Display mainframe front-panel controls fall into three general groups: those that deal with the display, those that deal with frequency, and those that deal with amplitude. These controls are shown in Figure 3-1 and accompanied by detailed explanations of their use.

3-14. Display. The display group consists of:

SWEEP TIME/DIV	VIDEO FILTER
SWEEP TRIGGER	BASELINE CLIPPER
VERT POSN	HORIZONTAL POSITION
VERT GAIN	INTENSITY
MANUAL SWEEP	FOCUS
HORIZ GAIN (rear panel of HP 8559A)	TRACE ALIGN

3-15. The display group enables the operator to calibrate the display and to select a variety of scan and display conditions. However, when the SWEEP TIME/DIV Control is placed in the AUTO position, sweep time is controlled by the RESOLUTION BW, FREQ SPAN/DIV, and VIDEO FILTER controls.

3-16. Frequency. The frequency group consists of:

TUNING
FREQUENCY BAND GHz
ALT IF
SIG IDENT
RESOLUTION BW
FREQ SPAN/DIV

3-17. The frequency group enables the operator to control how the Spectrum Analyzer displays the frequency domain. The RESOLUTION BW and FREQ SPAN/DIV controls, when pushed in, are coupled together, and moving either control moves the other. When the SWEEP TIME/DIV control is in the AUTO position, varying the RESOLUTION BW or the FREQ SPAN/DIV (coupled or uncoupled) will change the sweep time to maintain calibration. With the two controls coupled together in the optimum position, RESOLUTION BW's of 3 MHz to 1 kHz will be automatically selected as the FREQ SPAN/DIV is narrowed from F (Full) to 0 (Zero). TUNING controls coarse and fine (coarse is larger knob) set the center frequency of the displayed spectrum. RESOLUTION BW control determines the resolution of the signals on the CRT.

3-18. Amplitude. The amplitude group consists of:

REFERENCE LEVEL dBm
INPUT ATTEN
REF LEVEL FINE
REF LEVEL CAL
10 dB/DIV – 1 dB/DIV – LIN (Amplitude Scale)

3-19. The amplitude group enables the operator to measure signal amplitude in units of either voltage or dBm.

3-20. OPERATING PRECAUTIONS

3-21. Signal Input

3-22. The HP 8559A Spectrum Analyzer plug-in is a sensitive measuring instrument. Overloading the input with too much power, peak voltage, or dc voltage will permanently damage the input circuits. Do not exceed the input levels specified below:

Maximum Input (Damage) Levels

HP 8559A
Total Power:
+20 dBm (0.1W, 2.2 Vrms) with 0 dB input attenuation
+30 dBm (1W, 7.1 Vrms) with ≥ 10 dB input attenuation

dc or ac (<100 Hz): ±7.1V

Peak Pulse Power: +50 dBm (100W, >10μsec pulse width, 0.01% duty cycle) with ≥ 30 dB input attenuation

NOTE

When you are measuring input signals of unknown power levels, a preliminary instrument setting of ≥ 30 dB INPUT ATTEN is recommended.

CAUTION

Although the spectrum analyzer's reference level can be set for power levels up to +60 dBm, the total input power must not exceed the absolute maximum limits listed above.

3-23. Line Power On

3-24. Before connecting the line power cord, make sure the proper line voltage and line fuse have been selected for the display mainframe. Failure to set the ac power input selector on the display mainframe to correspond with the level of the ac source voltage could cause damage to the instrument when the power cord is plugged in.

WARNING

The spectrum analyzer and any device connected to it must be connected to power line ground. Failure to ensure proper grounding could result in a shock hazard to personnel or damage to the instrument.

3-25. LINE power is switched at the display mainframe front panel. A safety indicator lights when the ac power is on. NEVER remove a spectrum analyzer plug-in from the display mainframe without first switching the ac LINE power switch to OFF.

3-26. For optimum performance, you should allow the spectrum analyzer to warm up for at least 30 minutes before using it to make measurements.

3-27. FRONT-PANEL ADJUSTMENT PROCEDURE

3-28. The front-panel adjustment procedure adapts the HP 8559A Spectrum Analyzer plug-in to a particular display mainframe and should be performed daily after instrument warm-up. The step-by-step adjustment is also an excellent way for new users to become acquainted with the various spectrum analyzer controls. Once the procedure is completed, the

spectrum analyzer is calibrated for absolute amplitude and frequency measurements. Set the controls as shown in Table 1 before you start the adjustment procedure.

TABLE 1. ADJUSTMENT SETTINGS

Function	Setting
Spectrum Analyzer Plug-In	
INPUT ATTEN (dB)*	10 dB
REFERENCE LEVEL	0 dBm
Option 002	+50 dBmV
REF LEVEL FINE	0 dBm
Amplitude Scale	LIN
FREQ SPAN/DIV	10 MHz (uncoupled)
RESOLUTION BW	1 MHz (uncoupled)
SWEEP TIME/DIV	AUTO
SWEEP TRIGGER	FREE RUN
START–CENTER (8558B, 8557A)	CENTER
FREQUENCY BAND GHz (8559A)	.01–3
TUNING	>60 MHz
BASELINE CLIPPER	OFF
VIDEO FILTER	OFF
*On older plug-ins, set OPTIMUM INPUT to –30 dBm.	
HP 853A Spectrum Analyzer Display	
TRACE A	WRITE
TRACE B	STORE BLANK
DGTL AVG	OFF
INPUT–B→A	OFF
HP 180-Series Display Mainframe	
DISPLAY	INT
MAGNIFIER	X1
SCALE (180TR, 182T)	OFF
PERSISTENCE (181T/TR)	MIN
Display Mode (181T/TR)	WRITE

3-29. Display Adjustments – HP 853A Spectrum Analyzer Display

1. Switch LINE power OFF then ON while holding PLOT GRAT push button depressed to activate the digital test routines. The "#0" that appears on the left side of the CRT means digital test routine #0 is now activated.

2. Press and release the PLOT GRAT push button four times to step to digital test routine #4, as indicated by the "#4" displayed on the left side of the CRT.

3. With an adjustment tool, adjust the FOCUS control as necessary to make the characters on the CRT as clear as possible.

4. Adjust the X POSN and Y POSN controls the align the square trace pattern with the outermost CRT graticule lines.

5. Momentarily press the PLOT GRAT and PLOT TRACE push buttons simultaneously to exit the digital test routines.

3-30. Display Adjustments – HP 180-Series Display Mainframe

1. With an adjustment tool, adjust the VERTICAL POSN control to place the CRT trace on a horizontal graticule line near the CRT center.

2. Reduce the INTENSITY and set the SWEEP TIME/DIV control to MAN. Use the MAN SWEEP knob to center the CRT dot.

CAUTION

Leaving a dot on the CRT for prolonged periods at high intensity can burn the phosphor.

3. Adjust FOCUS and ASTIG controls for the smallest round dot possible.

4. Reset the SWEEP TIME/DIV control to AUTO and increase the INTENSITY for an optimum CRT trace. Adjust the HORIZONTAL POSITION control to center the CRT trace. If the horizontal deflection is not exactly 10 divisions, adjust the HORIZ GAIN control located on the rear panel of the spectrum analyzer plug-in.

NOTE

To adjust the **HORIZ** GAIN, you must switch the **LINE** power OFF, then remove the spectrum analyzer plug-in from the mainframe.

5. Adjust TRACE ALIGN so that the CRT trace is parallel to the horizontal graticule line.

3-31. Frequency and Amplitude Adjustments

1. Adjust VERTICAL POSN to align the CRT trace with the bottom graticule line.

2. Center the LO feedthrough (i.e., the "signal" at 0 MHz) on the CRT with the TUNING control.

3. Narrow the FREQ SPAN/DIV to 200 kHz. Adjust the REF LEVEL FINE control as necessary to position the signal peak near the top CRT graticule line.

4. Center the LO feedthrough again if necessary, and adjust the FREQ ZERO to calibrate the FREQUENCY MHz readout at 00.0 MHz.

5. Set the FREQ SPAN/DIV control to 1 MHz and the REF LEVEL FINE control to 0. Adjust the TUNING control for a FREQUENCY MHz readout of approximately 250 MHz.

6. Press the 10 dB/DIV Amplitude Scale push button, and set the REFERENCE LEVEL control to −20 dBm (+30 dBmV for Option 002 instruments).

7. Connect the 250 MHz CAL OUTPUT to the spectrum analyzer input, and center the signal on the CRT with the TUNING control. The FREQUENCY MHz readout will indicate 250 MHz ±3 MHz.

8. Press the LIN Amplitude Scale push button. Adjust the REF LEVEL FINE control to place the signal peak at the top CRT graticule line.

9. Press the 10 dB/DIV Amplitude Scale push button. Adjust VERTICAL GAIN to place the signal peak at the top CRT graticule line.

10. Repeat steps 8 and 9 until the signal peak remains at the top CRT graticule line when the Amplitude Scale is alternated between 10 dB/DIV and LIN.

11. Set the REF LEVEL FINE control to 0, and the REFERENCE LEVEL control to −30 dBm (+20 dBmV for Option 002 instruments).

12. Press the LIN Amplitude Scale push button, and adjust REF LEVEL CAL to place the signal peak at the top CRT graticule line.

HP 853A SPECTRUM ANALYZER DISPLAY

REAR PANEL FEATURES

1 Line Power Receptacle: Three-conductor male receptacle for connecting ac power cable. Power plug retaining bracket, included with standard instrument, can be installed to prevent power cable disconnection when instrument is in transit. Power cable coils on special rear feet when not in use.

2 FUSE: Spring-loaded holder for cartridge-type primary power fuse.

3 SELECTOR (VOLTS): Adapts primary power transformer configuration to voltage of ac primary power source.

4 ADDRESS: Switch settings determine address of instrument to be used for communications via HP-IB. Address is set as sum of the switches, where A5 = 16, A4 = 8, A3 = 4, A2 = 2, and A1 = 1.

5 HORIZ (SWEEP) OUTPUT: BNC jack is a sweep output or sweep input, depending on the position of SWEEP switch on Interface Assembly A9. SWEEP switch on assembly A9 is factory set for sweep output (INT).

As a BNC output, HORIZ (SWEEP) OUTPUT provides horizontal sweep voltage from a 5K-ohm output impedance. The −5V to +5V output range corresponds to a full 10-division CRT horizontal deflection.

As a BNC input with a 20K-ohm input impedance, HORIZ (SWEEP) OUTPUT allows the CRT display to be swept by a −5V to +5V external horizontal sweep signal (approximately 30V/sec maximum sweep rate for digital display mode).

6 VERTICAL (VIDEO) OUTPUT: BNC output provides detected video signal from a 50-ohm output impedance. Typical 0 – 800 mV output range corresponds to full 8-division CRT vertical deflection.

7 BLANK (PENLIFT) OUTPUT: BNC output provides a +15V penlift/blanking signal from a 10K-ohm output impedance when CRT trace is blanked. Otherwise, output is low at 0V (low impedance, 150 mA max.) for an unblanked trace.

8 21.4 MHz IF OUTPUT: BNC output provides 21.4 MHz IF signal (linearly related to spectrum RF input) from a 50-ohm output impedance. Spectrum analyzer RESOLUTION BW controls the output bandwidth. Spectrum analyzer INPUT ATTEN, REFERENCE LEVEL FINE, and the first six REFERENCE LEVEL positions control the output amplitude. Output level is approximately −10 dBm into 50 ohms with a signal displayed at Reference Level.

9 HP-IB Connector: Hewlett-Packard Interface Bus connection allows remote instrument operation and direct digital plotting of CRT display.

FRONT PANEL FEATURES

10 TRACE A, B: Selects CRT display mode for each of two independent digital trace memories.

CLEAR WRITE: Continuously updates trace memory with current input signal data and displays trace memory contents on CRT.

MAXHOLD: Updates trace memory with maximum input signal data and displays trace memory contents on CRT.

STORE VIEW: Current trace memory contents are preserved and displayed on CRT.

STORE BLANK: Current trace memory contents are preserved without being displayed on CRT.

ANALOG DISPLAY: CRT display switches to conventional analog display of current input signal when both STORE BLANK push buttons are depressed.

11 DGTL AVG: Activates digital filtering algorithm that averages trace data over successive sweeps. Digital averaging should be restarted after any change in spectrum analyzer control settings.

12 INPUT – B→A: Subtracts contents of trace B memory point-by-point from current input signal data and stores result (normalized input signal data) in trace A memory. Reference line is factory-preset at center horizontal CRT graticule line; normalized trace appears at reference line when input signal data is identical to stored trace B. Reference line indicates 0 dB for relative amplitude measurements.

13 PLOT GRAT/HP-IB CLEAR: Initiates sequence of plotter commands over HP-IB to plot CRT graticule lines (and remotely-programmed annotation). Press push button again to abort active plot. HP-IB plotter must be set to listen-only mode.

To recover from illegal HP-IB commands (SYNTAX ERR) and to reset display state, press push button for at least 3 seconds to perform HP-IB CLEAR. Instrument returns to LOCAL and discontinues any HP-IB operation in progress.

Activate digital test routines by pressing PLOT GRAT push button while switching LINE power ON. Push button then selects desired test routine. Press both PLOT GRAT and PLOT TRACE push buttons to revert to normal display state.

14 PLOT TRACE: Initiates sequence of plotter commands over HP-IB to plot displayed CRT trace(s). Press push button again to abort active plot. HP-IB plotter must be set to listen-only mode.

15 LINE: AC line switch. Switches instrument primary power ON and OFF.

16 INTENSITY: Adjusts brightness of CRT trace(s) and annotation characters.

17 SCALE: Adjusts CRT background illumination. SCALE control is disabled in ANALOG DISPLAY mode.

18 Y POSN: Adjusts vertical position CRT trace. Use Y POSN with reference pattern in digital test routine #4 to align digital trace memory coordinates with corresponding CRT graticule lines.

19 X POSN: Adjusts horizontal position of CRT trace. Use X POSN with reference pattern in digital test routine #4 to align digital trace memory coordinates with corresponding CRT graticule lines.

20 TRACE ALIGN: Rotates trace about center of CRT.

21 FOCUS: Adjusts sharpness of CRT trace.

22 CRT Annotation: Indicates display control settings.

HP 8559A SPECTRUM ANALYZER PLUG-IN

23 FREQUENCY GHz: Displays spectrum analyzer center frequency.

24 FREQ CAL: Adjusts FREQUENCY GHz (**23**) readout for calibration on 35 MHz CAL OUTPUT signal.

25 TUNING: Adjusts spectrum analyzer start or center frequency. Coarse tuning is provided by large knob; smaller knob provides FINE tuning.

26 FREQUENCY BAND GHz (HP 8559A): Selects calibrated frequency band. Shifts FREQUENCY GHz (**23**) readout and adjusts CRT frequency and amplitude calibration for proper display of in-band signals.

27 ALT IF: Shifts first IF 15 MHz to eliminate baseline lift caused by input signals at approximately 3.0075 GHz.

28 SIG IDENT: Identifies correct FREQUENCY BAND GHz (**26**) for unknown signal. Shifts IF and lowers displayed signals on alternate spectrum analyzer sweeps. Correct response is 1 MHz shift to left.

29 VERTICAL POSN: Adjusts vertical position of CRT trace.

30 VERTICAL GAIN: Adjusts deflection circuit gain for amplitude scale calibration of CRT display.

31 BASELINE CLIPPER: Prevents CRT blooming in variable persistence, storage display mainframes (such as the HP 181T/TR) by blanking the lower portion of the CRT display. When it is operating in its digital display mode, the HP 853A Spectrum Analyzer Display does not respond to this control.

32 VIDEO FILTER: Post-detection low-pass filter smooths CRT trace by averaging random noise. The MAX (detent) position selects 1.5 Hz bandwidth for maximum noise averaging and noise level measurements. The VIDEO FILTER bandwidth is scaled by resolution bandwidth (**39**) setting. The MAX VIDEO FILTER should **not** be used for CW signal analysis.

33 SWEEP Indicator: Remains lit during each sweep.

34 SWEEP TRIGGER: Selects sweep trigger mode.

VIDEO: Sweep triggered on internal post-detection video waveform. One-half major division of vertical deflection (noise, AM signal, etc.) is required to trigger sweep. VIDEO is normally used with 0 (zero) frequency span for time-domain analysis.

LINE: Sweep triggered at ac line frequency.

FREE RUN: End of each sweep triggers new sweep.

SINGLE: Single sweep triggered or reset by turning SWEEP TRIGGER clockwise momentarily.

35 INPUT 50Ω: Precision type N (female) or BNC (female) signal input connector with 50-ohm input impedance.
Options 001 and 002: INPUT 75Ω – 75-ohm BNC (female) signal input connector.

CAUTION

50-ohm BNC connectors might cause damage if used directly with Option 001 and 002 75-ohm BNC INPUT and CAL OUTPUT connectors.

36 SWEEP TIME/DIV: Selects time required to sweep one major horizontal division on CRT.

AUTO: Automatically selects fastest allowable sweep time as a function of FREQ SPAN/DIV (**38**), RESOLUTION BW (**39**), and VIDEO FILTER (**32**) settings to maintain display amplitude calibration. AUTO operation retained with FREQ SPAN/DIV and RESOLUTION BW controls uncoupled.

TIME/DIV: Selects calibrated sweep time. TIME/DIV is used primarily with 0 (Zero) frequency span for time-domain analysis of modulation waveforms. Display amplitude calibration not guaranteed for other frequency spans.

MAN: Enables manual frequency scan using MAN SWEEP knob.

37 REF LEVEL CAL: Adjusts spectrum analyzer RF gain to calibrate top CRT graticule line for absolute amplitude measurements.

38 FREQ SPAN/DIV: Selects CRT horizontal axis frequency calibration.

MHz/DIV
kHz/DIV: Selects desired frequency span. Alignment of OPTIMUM markings (> <) selects optimum resolution bandwidth (**39**).

0 (Zero Span): Spectrum analyzer operates as a manually-tuned receiver, at frequency indicated by FREQUENCY GHz or FREQUENCY MHz readout, for time-domain display of signal modulation.

F (Full Band): Spectrum analyzer sweeps entire selected frequency band. FREQUENCY GHz (**23**) readout corresponds to location of tuning marker displayed on CRT.

39 RESOLUTION BW: Selects spectrum analyzer 3-dB bandwidth. Alignment of OPTIMUM markings (> <) automatically selects optimum resolution bandwidth for any frequency span. When pushed in, RESOLUTION BW couples mechanically with FREQ SPAN/DIV (**38**).

40 CAL OUTPUT: BNC (female) output provides calibration signal from 50-ohm output impedance.
Options 001 and 002: 75-ohm output impedance.

CAUTION

50-ohm BNC connectors might cause damage if used directly with Option 001 and 002 75-ohm BNC INPUT and CAL OUTPUT connectors.

41 10 dB/DIV – 1 dB/DIV – LIN (Amplitude Scale): Selects CRT vertical axis amplitude calibration (logarithmic or linear scale). Reference Level remains constant at top CRT graticule line.

42 REFERENCE LEVEL: Adjusts power level (in dBm or dBmV) represented by top CRT graticule line. Large outer knob adjusts REFERENCE LEVEL in calibrated 10-dB steps; FINE vernier provides 12 dB of continuous adjustment.

43 INPUT ATTEN: Selects desired RF input attenuation, indicated by blue numbers (push and turn).

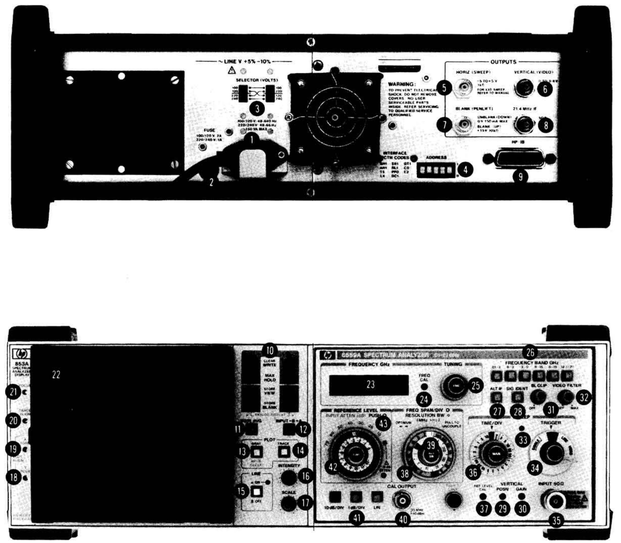

FIGURE 3-1. HP 8559A/853A CONTROLS, CONNECTORS, AND INDICATORS

SECTION IV
PERFORMANCE TESTS

4-1. INTRODUCTION

4-2. The procedures in this section test the electrical performance of the instrument using the specifications in Section I as the performance standards. The performance tests included in this section are listed in Table 4-1. Most of the tests can be performed without access to the interior of the instrument. If a test measurement is marginal, perform the appropriate adjustment procedures in Section V.

TABLE 4-1. PERFORMANCE TESTS

Paragraph	Test
4-11	Frequency Span Accuracy
4-12	Tuning Accuracy
4-13	Residual FM
4-14	Noise Sidebands
4-15	Resolution Bandwidth Accuracy
4-16	Resolution Bandwidth Selectivity
4-17	Average Noise Level
4-18	Residual Responses
4-19	Frequency Response
4-20	Gain Compression
4-21	Bandwidth Switching (Amplitude Variation)
4-22	Input Attenuator Accuracy
4-23	Reference Level Accuracy
4-24	Sweep Time Accuracy
4-25	Calibrator Output Accuracy
4-26	Display Fidelity

4-3. INSTRUMENTS TESTED

4-4. Since a compatible display mainframe is required for operation of the HP Model 8559A Spectrum Analyzer plug-in, the specifications listed in Table 1-1 apply when both instruments are functioning together. Consequently, the performance tests in this section verify the proper operation of both the HP 8559A and the display mainframe.

4-5. EQUIPMENT REQUIRED

4-6. The equipment required for the performance tests is listed under Recommended Test Equipment in Section I. Any equipment that satisfies the critical specifications given in the table may be substituted for the recommended model.

4-7. TEST RECORD

4-8. Results of the performance tests may be tabulated in the Performance Test Record at the end of this section. The test record lists test specifications and acceptable limits.

4-9. CALIBRATION CYCLE

4-10. This instrument requires periodic calibration. Calibration should be verified every six months by means of the performance tests.

PERFORMANCE TESTS

NOTE

Perform the Front Panel Adjustment Procedure in Section III before proceeding with performance tests. Allow at least 30 minutes warmup time.

4-11. FREQUENCY SPAN ACCURACY

SPECIFICATION:

There are 14 calibrated spans ranging from 10 kHz per division to 200 MHz per division in a 1, 2, 5 sequence. Frequency error between any two points on the display is within ±5 percent of the indicated frequency separation.

DESCRIPTION:

Wide span widths are checked using the 100-, 10-, and 1-MHz outputs of a comb generator. Narrow span widths are checked using the output of a comb generator modulated by a function generator. Since the comb generator produces frequency components separated by a precisely determined frequency interval, the resultant spectral lines displayed on the CRT are evenly spaced when no span error exists in the instrument. Thus, span error is the cumulative variation of distance among the spectral line intervals displayed across the CRT. The amount of span error is determined by comparing the distance of the first nine graticule divisions with the displayed distance of the corresponding spectral line intervals.

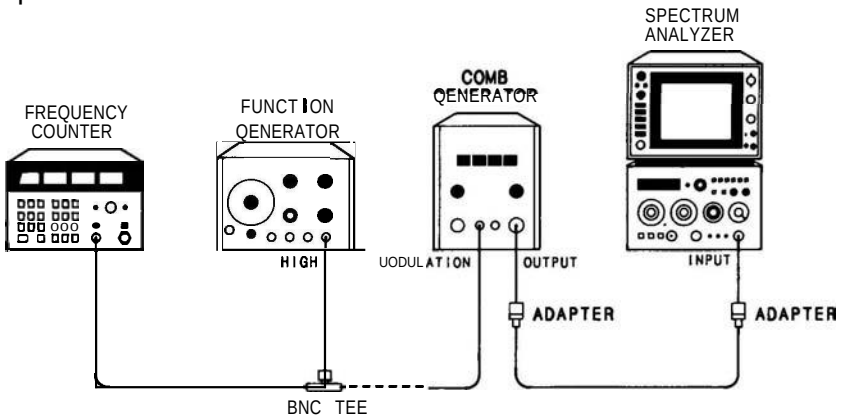

FIGURE 4-1. FREQUENCY SPAN ACCURACY TEST SETUP

EQUIPMENT:

Comb Generator	HP 8406A
Frequency Counter	HP 5342A, Opt. 005
Function Generator	HP 3310A
BNC Tee	HP 1250-0781
Adapter, Type N (m) to BNC (f) (2 required)	HP 1250-0780

PERFORMANCE TESTS

4-11. FREQUENCY SPAN ACCURACY (Cont'd)

PROCEDURE:

1. Set equipment controls as follows:

Spectrum Analyzer:

FREQUENCY BAND GHz	.01 – 3
TUNING	1.5 GHz
FREQ SPAN/DIV	200 MHz
RESOLUTION BW	OPTIMUM, coupled (pushed in)
INPUT ATTEN	0 dB
REFERENCE LEVEL	– 10 dB
REF LEVEL FINE	0
Amplitude Scale	10 dB/DIV
SWEEP TIME/DIV	AUTO
SWEEP TRIGGER	FREE RUN
ALT IF	OFF
SIG IDENT	OFF
BL CLIP	OFF
VIDEO FILTER	OFF

Comb Generator:

COMB FREQUENCY – MHz	100MC
INTERPOLATION AMPLITUDE – 1 MHz	OFF
OUTPUT AMPLITUDE	10 o'clock

Function Generator:

FUNCTION	SINE
RANGE	10K
Frequency	200kHz
DC OFFSET LEVEL	0

2. Connect equipment as shown in Figure 4-1 but do not connect function generator to comb generator.

PERFORMANCE TESTS

4-11. FREQUENCY SPAN ACCURACY (Cont'd)

3. Adjust spectrum analyzer TUNING control to position one spectral line (from comb generator) at first graticule line (left-hand edge of display). Measure the error between 17th spectral line and 9th graticule line as shown in Figure 4-2. Error should be no greater than ±0.4 division.

_____ div

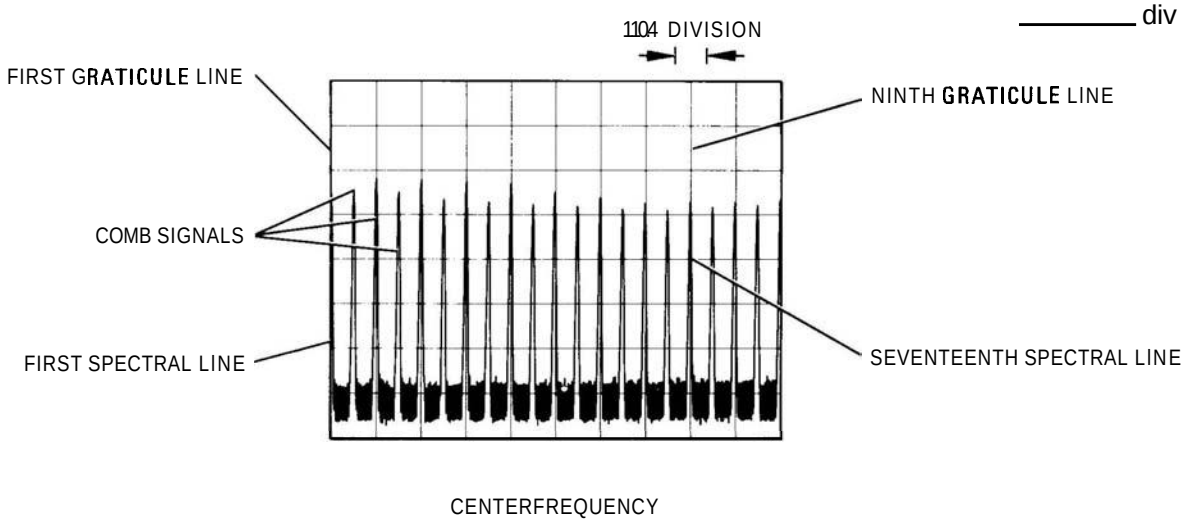

FIGURE 4-2. FREQUENCY SPAN ACCURACY MEASUREMENT FOR SEVENTEENTH SPECTRAL LINE

4. Set FREQ SPAN/DIV to 100 MHz. Adjust TUNING control to position one spectral line on the first graticule line. Measure the error between ninth spectral line and ninth graticule line. Error should be no greater than ±0.4 division.

_____ div

5. Set FREQ SPAN/DIV to 50 MHz. Adjust TUNING control to position one spectral line on the first graticule line. Measure the error between fifth spectral line and ninth graticule line. Error should be no greater than ±0.4 division.

_____ div

6. Set comb generator COMB FREQUENCY – MHz for 10-MHz comb. Set spectrum analyzer FREQ SPAN/DIV to 20 MHz. Adjust TUNING control to position one spectral line on the first graticule line. Measure the error between 17th spectral line and ninth graticule line as shown in Figure 4-3. Error should be no greater than ±0.4 division.

_____ div

7. Set FREQ SPAN/DIV to 10 MHz. Adjust TUNING control to position one spectral line on the first graticule line. Measure the error between ninth spectral line and ninth graticule line. Error should be no greater than ±0.4 division.

_____ div

PERFORMANCE TESTS

4-11. FREQUENCY SPAN ACCURACY (Cont'd)

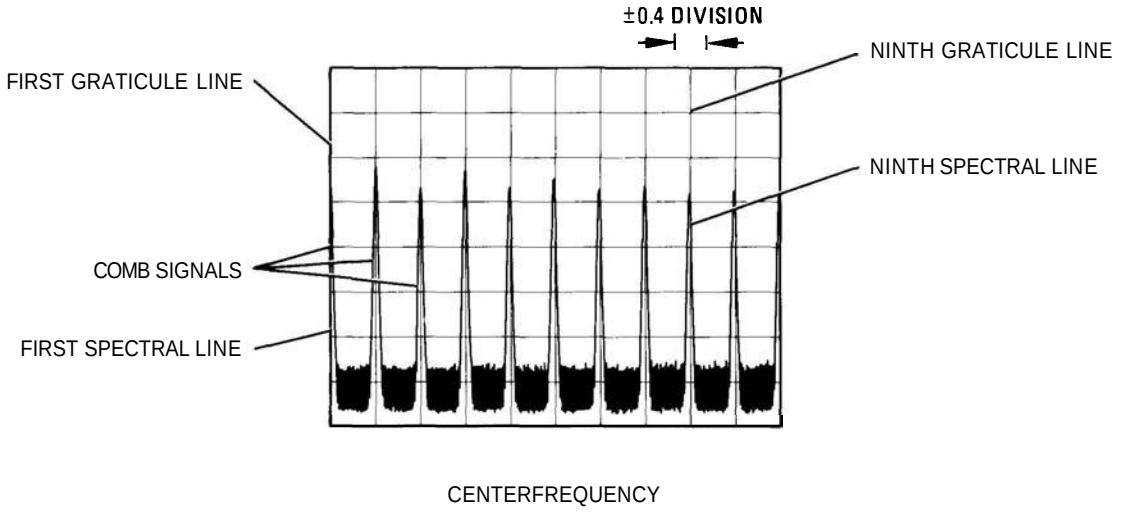

FIGURE 4-3. FREQUENCY SPAN ACCURACY MEASUREMENT FOR NINTH SPECTRAL LINE

8. Set FREQ SPAN/DIV to 5 MHz. Adjust TUNING control to position one spectral line on the first graticule line. Measure the error between fifth spectral line and ninth graticule line. Error should be no greater than ±0.4 division.

_____ div

9. Set comb generator COMB FREQUENCY – MHz for 1-MHz comb and increase OUTPUT AMPLITUDE control to maximum setting. Set spectrum analyzer FREQ SPAN/DIV to 2 MHz. Adjust TUNING control to position one spectral line on the first graticule line. Measure the error between 17th spectral line and ninth graticule line. Error should be no greater than ±0.4 division.

_____ div

10. Set FREQ SPAN/DIV to I MHz. Adjust TUNING control to position one spectral line at first graticule line. Measure the error between ninth spectral line and ninth graticule line. Error should be no greater than ±0.4 division.

_____ div

11. Set FREQ SPAN/DIV to 500 kHz. Adjust TUNING control to position one spectral line on the first graticule line. Measure the error between fifth spectral line and ninth graticule line. Error should be no greater than ±0.4 division.

_____ div

12. Set comb generator COMB FREQUENCY – MHz for 10-MHz comb. Adjust spectrum analyzer TUNING to position an in-band spectral line on the center graticule line (use SIG IDENT if necessary).

PERFORMANCE TESTS

4-11. FREQUENCY SPAN ACCURACY (Cont'd)

13. Set function generator frequency to 200 kHz (±0.5%) using frequency counter. Connect function generator output to comb generator MODULATION input. Set function generator OUTPUT LEVEL for a clean 200-kHz comb on the spectrum analyzer display.

NOTE

To obtain a clean comb on the spectrum analyzer display, use either the LOW or HIGH output of the function generator and readjust the OUTPUT LEVEL control as necessary.

14. Set spectrum analyzer FREQ SPAN/DIV to 200 kHz. Adjust TUNING control to position one spectral line on the first graticule line. Measure the error between ninth spectral line and ninth graticule line. Error should be no greater than ±0.4 division.

_____ div

15. Using the procedure of NOTE in step 13, vary spectrum analyzer FREQ SPAN/DIV and function generator output frequency in accordance with Table 4-2. Adjust spectrum analyzer TUNING control to position one spectral line on the first graticule line. Measure the span error between ninth spectral line and ninth graticule line.

NOTE

Disconnect function generator from comb generator when setting frequency with frequency counter. Increase spectrum analyzer REFERENCE LEVEL control setting as necessary for the lowest frequencies.

TABLE 4-2. NARROW SPAN WIDTH ERROR MEASUREMENT

Spectrum Analyzer		Function Generator Output Frequency*	Span Width Error	
FREQ SPAN/DIV	RESOLUTION BW		Maximum	Actual
100 kHz	OPTIMUM	100 kHz	±0.4 div.	____ div.
50 kHz	OPTIMUM	50 kHz	±0.4 div.	____ div.
20 kHz	OPTIMUM	20 kHz	±0.4 div.	____ div.
10 kHz	OPTIMUM	10 kHz	±0.4 div.	____ div.

*Check function generator output frequency using a frequency counter. Frequency readout should be within ±0.5% of desired audio frequency.

PERFORMANCE TESTS

4-12. TUNING ACCURACY

SPECIFICATION:

0.1 – 3.0 GHz: ± (1 MHz + 0.3% of center frequency)
3.0 – 21.0 GHz: ± (5 MHz + 0.2% of center frequency)

DESCRIPTION:

An external RF source is used to provide a frequency calibrated input signal to the spectrum analyzer for three points on each frequency band. The digital FREQUENCY GHz readout is compared with the known test frequency to find the amount of readout (or tuning) error. The 10 dB attenuator is necessary to reduce LO emission from the spectrum analyzer to the frequency counter when using the sweep oscillator.

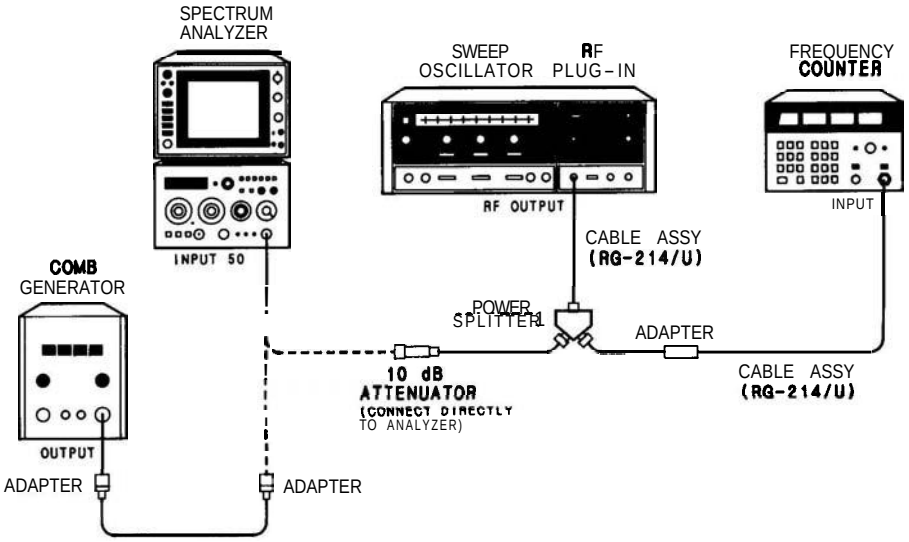

FIGURE 4-4. TUNING ACCURACY TEST SETUP

NOTE

The HP 8350A Sweep Oscillator may be substituted for the HP 8620C in this procedure.

EQUIPMENT

Comb Generator ..... HP 8406A
Sweep Oscillator ..... HP 8620C
RF Plug-In ..... HP 86290B, Opt. H08
Frequency Counter ..... HP 5342A, Opt. 005
Power Splitter ..... HP 11667A-C16
10-dB Attenuator ..... HP 8491B, Opt. 010
Cable Assembly, RG-214/U, with Type N Connectors (2 required) ..... HP 11500A
Adapter, Type N (f) to N (f) ..... HP 1250-1472
Adapter, Type N (m) to BNC (f) (2 required) ..... HP 1250-0780

PERFORMANCE TESTS

4-12. TUNING ACCURACY (Cont'd)

PROCEDURE:

1. Set spectrum analyzer controls as follows:

FREQUENCY BAND GHz	.01 – 3
TUNING	0.035 GHz
FREQ SPAN/DIV	200 kHz
RESOLUTION BW	OPTIMUM, coupled (pushed in)
INPUT ATTEN	10 dB
REFERENCE LEVEL	– 10 dBm
REF LEVEL FINE	0
Amplitude Scale	10 dB/DIV
SWEEP TIME/DIV	AUTO
SWEEP TRIGGER	FREE RUN
ALT IF	OFF
SIG IDENT	OFF
BL CLIP	OFF
VIDEO FILTER	OFF

2. Connect CAL OUTPUT signal of spectrum analyzer to INPUT 50Ω. Adjust TUNING control to position signal at center graticule line of display. Adjust FREQ CAL potentiometer for a FREQUENCY GHz display of 0.035.

3. Connect comb generator to spectrum analyzer INPUT 50Ω as shown in Figure 4-4.

4. Set comb generator controls as follows:

COMB GENERATOR – MHz	10 MC
INTERPOLATION AMPLITUDE – 1 MHz	OFF
OUTPUT AMPLITUDE	Full clockwise

5. Adjust spectrum analyzer TUNING control to center 10 MHz comb tooth. FREQUENCY GHz readout should indicate:

Min.	Actual	Max.
0.09	_____	0.011

6. Set comb generator COMB FREQUENCY – MHz for 100 MHz comb. Set spectrum analyzer FREQ SPAN/DIV to 1 MHz, and adjust TUNING control to position 1.5-GHz comb tooth at center graticule line of display. FREQUENCY GHz readout should indicate:

Min.	Actual	Max.
1.94	_____	1.506

7. Connect sweep oscillator to spectrum analyzer INPUT 50Ω as shown in Figure 4-4.

PERFORMANCE TESTS

4-12. TUNING ACCURACY (Cont'd)

NOTE

The 10 dB attenuator should be connected directly to the INPUT 50Ω of the spectrum analyzer and the 11667A power splitter (no cable assembly should be used between attenuator and analyzer or power splitter).

8. Adjust sweep oscillator for CW output at 3.000 GHz, as measured by frequency counter. Vary POWER LEVEL control as required for accurate measurement. Adjust spectrum analyzer TUNING control to center signal on display. FREQUENCY GHz readout should indicate:

Min.	Actual	Max.
2.90	_____	3.010

9. Using procedure of step 8, check spectrum analyzer tuning accuracy at remaining frequencies listed in Table 4-3. Indication on FREQUENCY GHz readout must fall within corresponding test limits at each frequency.

NOTE

Use SIG IDENT to verify that spectrum analyzer is tuned to desired in-band signal response whenever tuning error appears excessive.

TABLE 4-3 TUNING ACCURACY MEASUREMENT

Spectrum Analyzer	RF Source	FREQUENCY GHz READOUT		
FREQUENCY BAND (GHz)*	Frequency (GHz)**	Minimum (GHz)	Actual (GHz)	Maximum (GHz)
0.01–3	0.01	0.009	_____	0.011
	1.5	1.494	_____	1.506
	3.0	2.990	_____	3.010
6–9	6.1	6.083	_____	6.117
	7.5	7.480	_____	7.520
	9.0	8.977	_____	9.023
3–9	3.1	3.089	_____	3.110
	6.0	5.983	_____	6.017
	9.0	8.977	_____	9.023
9–15	9.1	9.077	_____	9.123
	12.0	11.971	_____	12.029
	15.0	14.965	_____	15.035
6–15	6.1	6.083	_____	6.117
	10.5	10.474	_____	10.526
	15.0	14.965	_____	15.035
12.1–21	12.1	12.071	_____	12.129
	17.0	16.961	_____	17.039
	21.0	20.953	_____	21.047

*nominal band limits
**frequency set to within ±0.05%

PERFORMANCE TESTS

4-13. RESIDUAL FM

SPECIFICATION:

Less than 2kHz peak-to-peak for a time interval ≤0.1 second; less than 2kHz peak-to-peak in a 180-series display mainframe with 220/240 line voltage.

DESCRIPTION:

This test measures the inherent short-term instability (residual FM) of the LO system in the spectrum analyzer. A stable signal (supplied by a comb generator) is applied to the spectrum analyzer input and slope detected with the linear portion of the 10-kHz bandwidth filter in zero span (fixed-tuned receiver – see Figure 4-6). Variations of the spectrum analyzer's LO frequency (residual FM) can be measured as an amplitude shift on the CRT display (1 kHz ≈ 0.7 major division with LIN Amplitude Scale).

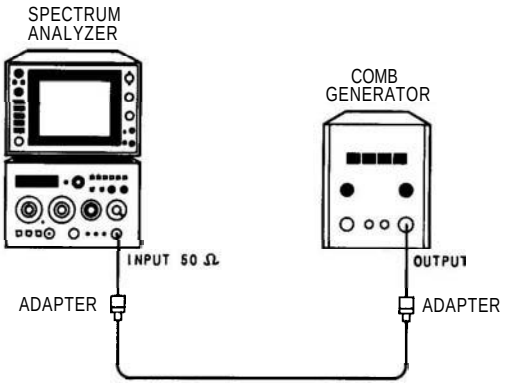

FIGURE 4-5. RESIDUAL FM TEST SETUP

EQUIPMENT:

Comb Generator ..... HP 8406A
Adapter, Type N (m) to BNC (f) (2 required) ..... HP 1250-0780

PROCEDURE:

1. Set equipment controls as follows:

Spectrum Analyzer:

FREQUENCY BAND GHz ..... .01 – 3
TUNING ..... 3.000 GHz
FREQUENCY SPAN/DIV ..... 100 kHz
RESOLUTION BW ..... 10 kHz
INPUT ATTEN ..... 30 dB
REFERENCE LEVEL ..... –20 dBm
REF LEVEL FINE 0
Amplitude Scale ..... LIN
SWEEP TIME/DIV ..... AUTO
SWEEP TRIGGER ..... FREE RUN
ALT IF ..... OFF
SIG IDENT ..... OFF
BLCLIP ..... OFF
VIDEO FILTER ..... OFF

PERFORMANCE TESTS

4-13. RESIDUAL FM (Cont'd)

Comb Generator:

COMB FREQUENCY – MHz 100MC
INTERPOLATION AMPLITUDE – 1 MHz ..... OFF
OUTPUT AMPLITUDE ..... Full clockwise

2. Connect OUTPUT of comb generator to spectrum analyzer INPUT 50Ω as shown in Figure 4-5.

NOTE

The 8559A is sensitive to vibration. Be sure spectrum analyzer is in a vibration-free environment.

3. Adjust spectrum analyzer TUNING control to display 3.0 GHz signal produced by comb generator. Adjust REFERENCE LEVEL and REF LEVEL FINE controls to position peak of signal at top graticule line.

4. Keep 3.0 GHz signal centered on CRT with TUNING control while reducing FREQ SPAN/DIV to zero.

5. Set RESOLUTION BW to 10 kHz and SWEEP TIME/DIV to 0.1 sec.

6. Slightly readjust spectrum analyzer FINE TUNING control until trace appears between fourth and seventh graticule lines. Peak-to-peak variation of trace should not exceed 1.4 vertical division for each horizontal division (see Figure 4-7).

_____ div

NOTE

For 220/240 line voltages, peak-to-peak variation of trace should not exceed 1.4 vertical divisions (2 kHz) in a 180-series display mainframe.

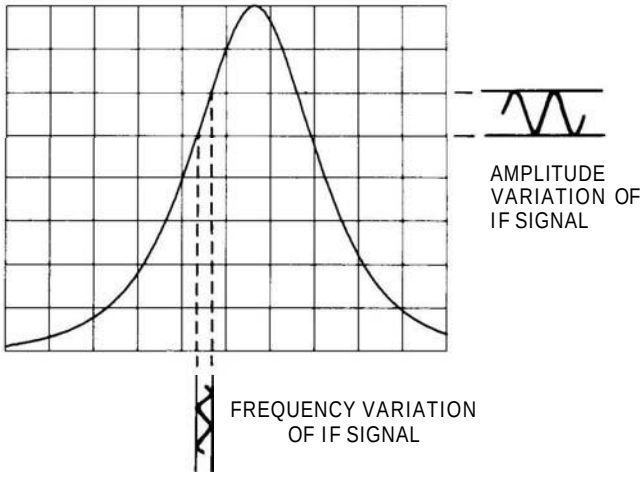

FIGURE 4-6. RESIDUAL FM TO AM CONVERSION DISPLAY

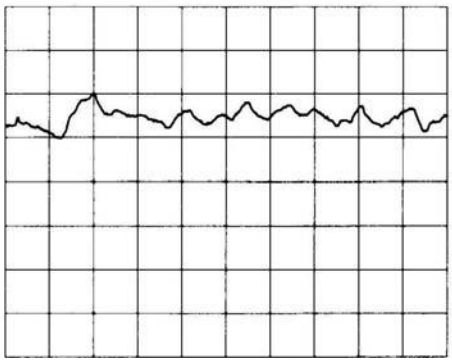

FIGURE 4-7. RESIDUAL FM DISPLAY

PERFORMANCE TESTS

4-14. NOISE SIDEBANDS

SPECIFICATION:

Noise sidebands are at least 70 dB below a CW signal, 30 kHz or more away from the signal with a 1 kHz resolution bandwidth and full video filtering.

DESCRIPTION:

A stable 1.8 GHz CW signal is applied at a −20 dBm level to the spectrum analyzer and displayed on the CRT. The amplitudes of noise-associated sidebands and unwanted responses near the signal are measured.

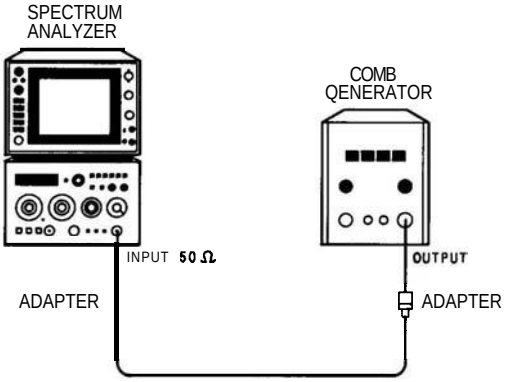

FIGURE 4-8. NOISE SIDEBANDS TEST SETUP

EQUIPMENT:

Comb Generator	HP 8406A
Adapter, Type N (m) to BNC (f) (2 required)	HP 1250-0780

PROCEDURE:

1. Set equipment controls as follows:

Spectrum Analyzer:

FREQUENCY BAND GHz	.01 – 3
TUNING	1.8 GHz
FREQ SPAN/DIV	1 MHz
RESOLUTION BW	30 kHz, uncoupled
INPUT ATTEN	0 dB
REFERENCE LEVEL	−20 dBm
REF LEVEL FINE	0
Amplitude Scale	10 dB/DIV
SWEEP TIME/DIV	AUTO
SWEEP TRIGGER	FREE RUN
ALT IF	OFF
SIG IDENT	OFF
BLCLIP	OFF
VIDEO FILTER	OFF

PERFORMANCE TESTS

4-14. NOISE SIDEBANDS (Cont'd)

Comb Generator:

COMB FREQUENCY – MHz ..... 100 MC
INTERPOLATION AMPLITUDE – 1 MHz ..... OFF
OUTPUT AMPLITUDE ..... Full clockwise

2. Connect equipment as shown in Figure 4-8.

3. Adjust TUNING control to locate 1.8 GHz comb tooth on CRT.

4. Adjust REFERENCE LEVEL and REF LEVEL FINE controls to position peak of 1.8-GHz signal at top graticule line.

5. Decrease FREQ SPAN/DIV to 20 kHz and RESOLUTION BW to 1 kHz. Adjust TUNING as necessary to keep signal centered.

6. Position signal at center of display. Set VIDEO FILTER control fully clockwise (not in MAX detent position). Measure noise sidebands existing more than 1.5 divisions (30 kHz) from 1.8-GHz signal. Noise sidebands should be more than 70 dB (7 divisions) down from top graticule line.

_____ div. down

PERFORMANCE TESTS

4-15. RESOLUTION BANDWIDTH ACCURACY

SPECIFICATION:

Individual resolution bandwidth 3-dB points are calibrated to ±15% (±30% for 3 MHz bandwidth).

DESCRIPTION:

Resolution bandwidth accuracy is measured in the linear mode to eliminate log amplifier errors. Since signal level at the 3-dB points (half-power points) is related to peak signal level by a voltage ratio of 0.707:1.0, a peak level of 7.1 vertical divisions on the spectrum analyzer display gives a half-power level of 5 vertical divisions:

$$0.707 \text{ (voltage ratio)} = X \text{ div}/7.1 \text{ div}$$

$$X \text{ div} = (7.1)(0.707)$$

$$\approx 5 \text{ div}$$

In the 30-, 10-, 3-, and 1-kHz bandwidths, a 21.4 MHz signal (final IF) is injected directly into Bandwidth Filter No. 1 Assembly A11 to provide the stability required for measurement of narrow resolution bandwidths.

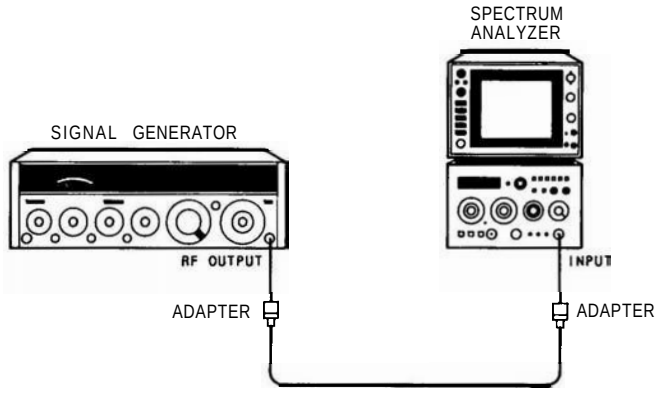

FIGURE 4-9. RESOLUTION BANDWIDTH ACCURACY TEST SETUP, 3 MHz TO 100 kHz

EQUIPMENT:

Signal Generator	HP 8640B
Extender Cable Assembly	HP 5060-0303
Adapter, Type N (m) to BNC (f) (2 required)	HP 1250-0780
Adapter, Type SMB (f) to BNC (f)	HP 1250-1236

PERFORMANCE TESTS

4-15. RESOLUTION BANDWIDTH ACCURACY (Cont'd)

PROCEDURE:

WARNING

Part of this test must be performed with power supplied to the instrument and with protective covers removed. The test should be performed only by sewice-trained personnel who are aware of the hazards involved.

1. Set equipment controls as follows:

Spectrum Analyzer:

FREQUENCY BAND GHz	.01 – 3
TUNING	0.035 GHz
FREQ SPAN/DIV	0
RESOLUTION BW	3 MHz
INPUT ATTEN	10 dB
REFERENCE LEVEL	0 dBm
REF LEVEL FINE	0
Amplitude Scale	LIN
SWEEP TIME/DIV	AUTO
SWEEP TRIGGER	FREE RUN
ALT IF	OFF
SIG IDENT	OFF
BLCLIP	OFF
VIDEO FILTER	OFF

Signal Generator:

COUNTER MODE	INT, EXPAND X10
AM	OFF
FM	OFF
FREQUENCY TUNE	35 MHz
RF	ON
OUTPUT LEVEL	0 dBm

2. Connect equipment as shown in Figure 4-9.

3. Adjust spectrum analyzer TUNING control to locate peak of 35 MHz signal on CRT. Reduce signal generator output if necessary.

NOTE

If necessary, select 10 **dB/DIV** to locate signal, then switch to LIN.

4. Adjust signal generator OUTPUT LEVEL to position trace at 7.1 divisions above graticule baseline.

PERFORMANCE TESTS

4-15. RESOLUTION BANDWIDTH ACCURACY (Cont'd)

5. Tune signal generator frequency until trace drops to 5 divisions above graticule baseline. Record signal generator frequency.

_____ MHz

6. Tune signal generator frequency in direction opposite to that of step 5 until trace peaks (7.1 divisions above graticule baseline) and then drops to 5 divisions above graticule baseline. Record signal generator frequency.

_____ MHz

NOTE

The bandwidths recorded in this performance test are required for calculations in 4-16 Resolution Bandwidth Selectivity performance test.

7. Calculate and record resolution bandwidth at 3-dB points (difference between frequencies recorded in steps 5 and 6).

Min.	Actual	Max.
2.0	_____	3.90 MHz

8. Select ALT IF (switch pushed in), leaving FREQ SPAN/DIV set to 0. Set signal generator to 35 MHz and repeat steps 3 through 7.

Min.	Actual	Max.
2.0	_____	3.90 MHz

9. Return ALT IF switch to OFF position. Set RESOLUTION BW to 1 MHz, leaving FREQ SPAN/DIV set to 0. Set signal generator to 35 MHz and repeat steps 3 through 7.

Min.	Actual	Max.
850	_____	1150 kHz

10. Set RESOLUTION BW to 300 kHz, leaving FREQ SPAN/DIV set to 0. Set signal generator to 35 MHz and repeat steps 3 through 7.

Min.	Actual	Max.
255	_____	345 kHz

11. Set RESOLUTION BW to 100 kHz, leaving FREQ SPAN/DIV set to 0. Set signal generator to 35 MHz and repeat steps 3 through 7.

Min.	Actual	Max.
85	_____	115 kHz

PERFORMANCE TESTS

4-15. RESOLUTION BANDWIDTH ACCURACY (Cont'd)

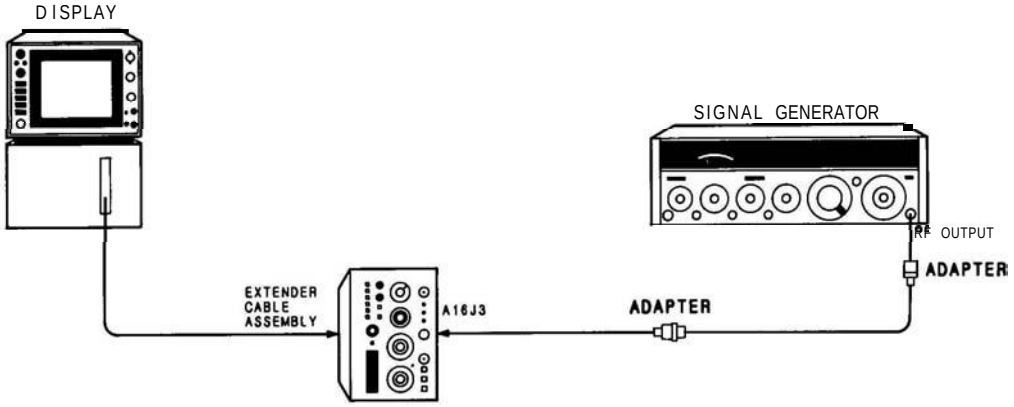

FIGURE 4-10. RESOLUTION BANDWIDTH ACCURACY TEST SETUP, 30 kHz TO 1 kHz

WARNING

In the following procedure, the plug-in must be removed from the display mainframe and connected through the extender cable assembly. Be very careful; the energy at some points in the instrument will, if contacted, cause personal injury. This test should be performed only by a skilled person who knows the hazard involved.

12. Set equipment controls as follows:

Spectrum Analyzer:

FREQUENCY BAND GHz	.01 – 3
TUNING	>0.010 GHz
FREQ SPAN/DIV	0 kHz
RESOLUTIONBW	30 kHz
INPUT ATTEN	10 dB
REFERENCELEVEL	0 dBm
REFLEVELFINE	0
Amplitude Scale	LIN
SWEEP TIME/DIV	AUTO
SWEEPTRIGGER	FREE RUN
ALTIF	OFF
SIG IDENT	OFF
BLCLIP	OFF
VIDEOFILTER	OFF

PERFORMANCE TESTS

4-15. RESOLUTION BANDWIDTH ACCURACY (Cont'd)

Signal Generator:

COUNTER MODE	INT, EXPAND X10
AM	OFF
FM	OFF
FREQUENCY TUNE	21.4 MHz
RF	ON
OUTPUT LEVEL	≈ −3 dBm

13. Connect equipment as shown in Figure 4-10.

NOTE

For early instruments that do not feature **A16J3,** a 21.4-MHz signal can be injected directly into the 300-MHz output **(A10J1)** of Third Converter Assembly **A10.** Set the signal generator OUTPUT LEVEL to **0 dBm** and use the spectrum analyzer REFERENCE LEVEL and REF LEVEL **FINE** controls in step 14 (≈ −40 **dBm)** to position the trace at 7.1 divisions above the graticule baseline.

14. Adjust signal generator frequency until spectrum analyzer trace is at peak. Set signal generator OUTPUT LEVEL to position trace at 7.1 divisions above graticule baseline. Set COUNTER MODE to EXPAND X100 (most significant digit will overflow).

15. Tune signal generator frequency until trace drops to 5 divisions above graticule baseline. Record signal generator frequency.

_____ MHz

16. Tune signal generator frequency in direction opposite to that of step 15 until trace peaks (7.1 divisions above graticule baseline) and then drops to 5 divisions above graticule baseline. Record signal generator frequency.

_____ MHz

17. Calculate and record resolution bandwidth at 3-dB points (difference between frequencies recorded in steps 15 and 16).

Min.	Actual	Max.
25.0 kHz	_____	34.50 kHz

18. Set RESOLUTION BW to 10 kHz, leaving FREQ SPAN/DIV set to 0. Repeat steps 14 through 17.

Min.	Actual	Max.
8.0 kHz	_____	11.50 kHz

PERFORMANCE TESTS

4-15. RESOLUTION BANDWIDTH ACCURACY (Cont'd)

19. Set RESOLUTION BW to 3 kHz, leaving FREQ SPAN/DIV set to 0. Repeat steps 14 through 17.

Min.	Actual	Max.
2.5 kHz	_____	3.45 kHz

20. Set RESOLUTION BW to 1 kHz, leaving FREQ SPAN/DIV set to 0. Repeat steps 14 through 17.

Min.	Actual	Max.
0.5 kHz	_____	1.15 kHz

21. Leave signal generator connected to A16J3 if continuing on with next performance test.

PERFORMANCE TESTS

4-16. RESOLUTION BANDWIDTH SELECTIVITY

SPECIFICATION:

60-dB/3-dB resolution bandwidth ratio: <15:1

DESCRIPTION:

The 60-dB bandwidth is measured for all resolution bandwidths. The 60- to 3-dB resolution bandwidth ratio (shape factor) is then computed for each bandwidth by dividing the 3-dB value (from the Resolution Bandwidth Accuracy test) into the 60-dB value.

In the 30-, 10-, 3-, and 1-kHz bandwidths, a 21.4-MHz signal (final IF) is injected into Bandwidth Filter No. 1 Assembly A11 to provide the stability required for the measurement of narrow resolution bandwidths.

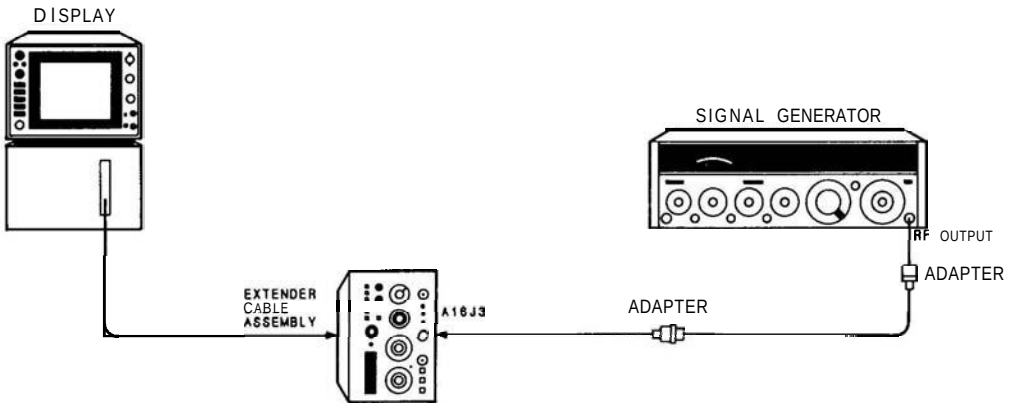

FIGURE 4-11. RESOLUTION BANDWIDTH SELECTIVITY TEST SETUP, 1 kHz TO 30 kHz

WARNING

In the following procedure, the plug-in must be removed from the display mainframe and connected through the extender cable assembly. Be very careful; the energy at some points in the instrument will, if contacted, cause personal injury. This test should be performed only by a skilled person who knows the hazard involved.

EQUIPMENT:

Signal Generator	HP 8640B
Extender Cable Assembly	HP 5060-0303
Adapter, SMB(f) to BNC (f)	HP 1250-1236
Adapter, Type N (m) to BNC (f) (2 required)	HP 1250-0780

PERFORMANCE TESTS

4-16. RESOLUTION BANDWIDTH SELECTIVITY (Cont'd)

PROCEDURE:

1. Set equipment controls as follows:

Spectrum Analyzer:

FREQUENCY BAND GHz	.01 – 3
TUNING	>0.010 GHz
FREQ SPAN/DIV	0
RESOLUTION BW	1 kHz
INPUT ATTEN	10 dB
REFERENCE LEVEL	0 dBm
REF LEVEL FINE	0
Amplitude Scale	10 dB/DIV
SWEEP TIME/DIV	AUTO
SWEEP TRIGGER	FREE RUN
ALT IF	OFF
SIG IDENT	OFF
BL CLIP	OFF
VIDEO FILTER	12 o'clock

Signal Generator:

COUNTER MODE	INT, EXPAND X10
AM	OFF
FM	OFF
FREQUENCY TUNE	21.4 MHz
RF	ON
OUTPUT LEVEL	≈ – 3 dBm

2. Connect equipment as shown in Figure 4-11.

NOTE

For early instruments that do not feature **A16J3,** a 321.4 MHz, **– 25 dBm** signal can be injected directly into the input of Third Converter Assembly A10 at blue cable **A10W1.** Set signal generator COUNTER MODE to EXPAND **X100** (most significant digit will overflow).

3. Adjust signal generator frequency until spectrum analyzer trace is at peak. Put signal generator OUTPUT LEVEL to position trace at top graticule line.

4. Tune signal generator until trace drops to 2 divisions above graticule baseline. Record signal generator frequency.

_____ MHz

PERFORMANCE TESTS

4-16. RESOLUTION BANDWIDTH SELECTIVITY (Cont'd)

5. Tune signal generator in direction opposite to that of step 4 until trace peaks (top graticule line) and then drops to 2 divisions above graticule baseline. Record signal generator frequency.

_____ MHz

6. Calculate and record resolution bandwidth at 60-dB points (difference between frequencies recorded in steps 4 and 5).

_____ kHz

7. Set RESOLUTION BW to 3 kHz, leaving FREQ SPAN/DIV set to 0. Repeat steps 3 through 6.

_____ kHz

8. Set RESOLUTION BW to 10 kHz, leaving FREQ SPAN/DIV set to 0. Repeat steps 3 through 6.

_____ kHz

9. Set RESOLUTION BW to 30 kHz, leaving FREQ SPAN/DIV set to 0. Repeat steps 3 through 6.

_____ kHz

10. Disconnect signal generator from A16J3. Set the display's LINE power to OFF and remove extender cable assembly. Install plug-in in mainframe and set LINE power to ON.

11. Set equipment controls as follows:

Spectrum Analyzer:

FREQUENCY BAND GHz	.01 – 3
TUNING	0.035 GHz
FREQ SPAN/DIV	0
RESOLUTION BW	100 kHz
INPUT ATTEN	10 dB
REFERENCE LEVEL	0 dBm
REF LEVEL FINE	0
Amplitude Scale	10 dB/DIV
SWEEP TIME/DIV	AUTO
SWEEP TRIGGER	FREE RUN
ALT IF	OFF
SIG IDENT	OFF
BLCLIP	OFF
VIDEO FILTER	12 o'clock

PERFORMANCE TESTS

4-16. RESOLUTION BANDWIDTH SELECTIVITY **(Cont'd)**

Signal Generator:

COUNTER MODE ..... INT, EXPAND X10
AM ..... OFF
FM ..... OFF
FREQUENCY TUNE ..... 35 MHz
RF ..... ON
OUTPUT LEVEL ..... 0 dBm

12. Connect equipment as shown in Figure 4-12.

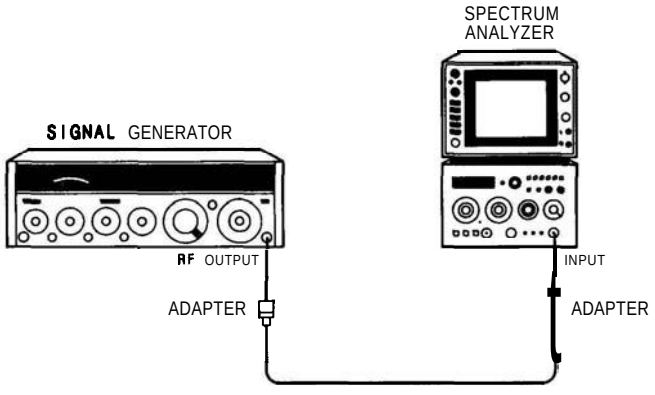

FIGURE 4-12. RESOLUTION BANDWIDTH SELECTIVITY TEST SETUP, 100 kHz TO 3 MHz

13. Adjust spectrum analyzer TUNING to locate peak of 35 MHz signal on CRT. Reduce signal generator output if necessary.

14. Adjust signal generator OUTPUT LEVEL to position trace at top graticule line.

15. Tune signal generator frequency until trace drops to 2 divisions above graticule baseline. Record signal generator frequency.

_____ MHz

16. Tune signal generator frequency in direction opposite to that of step 16 until trace peaks (top graticule line) and then drops to 2 divisions above graticule baseline. Record signal generator frequency.

_____ MHz

17. Calculate and record resolution bandwidth at 60-dB points (difference between frequencies recorded in steps 16 and 17).

_____ kHz

PERFORMANCE TESTS

4-16. RESOLUTION BANDWIDTH SELECTIVITY (Cont'd)

18. Set RESOLUTION BW to 300 kHz, leaving FREQ SPAN/DIV set to 0. Repeat steps 14 through 18.

_____ kHz

19. Set RESOLUTION BW to 1 MHz, leaving FREQ SPAN/DIV set to 0. Repeat steps 14 through 18.

_____ MHz

20. Select ALT IF (switch pushed in). Set RESOLUTION BW to 3 MHz, leaving FREQ SPAN/DIV set to 0. Repeat steps 14 through 18.

_____ MHz

21. Return ALT IF switch to OFF position. With RESOLUTION BW still in 3 MHz and FREQ SPAN/DIV set to 0, repeat steps 14 through 18.

_____ MHz

22. In Table 4-4, record 3-dB bandwidths computed in 4-15 Resolution Bandwidth Accuracy test.

23. In Table 4-4, record 60-dB bandwidths recorded in this procedure.

24. For each resolution bandwidth, divide 60-dB bandwidth by 3-dB bandwidth to obtain Resolution Bandwidth Ratio. Each ratio should be less than 15:1.

TABLE 4-4. RESOLUTION BANDWIDTH SELECTIVITY

RESOLUTION BW Setting	Actual 3 dB BW	Actual 60 dB BW	Resolution Bandwidth Ratio (60 dB/3 dB BW)
3 MHz	_____	_____	_____
3 MHz (ALT IF)	_____	_____	_____
1 MHz	_____	_____	_____
300 kHz	_____	_____	_____
100 kHz	_____	_____	_____
30 kHz	_____	_____	_____
10 kHz	_____	_____	_____
3 kHz	_____	_____	_____
1 kHz	_____	_____	_____

PERFORMANCE TESTS

4-17. AVERAGE NOISE LEVEL

SPECIFICATION:

The maximum average noise level for each frequency band, with 1 kHz resolution bandwidth and 0 dB attenuation, is given in Table 4-5.

DESCRIPTION:

The average noise level of the spectrum analyzer is checked by observing the average noise power level displayed on the CRT when no input signal is applied to the instrument.

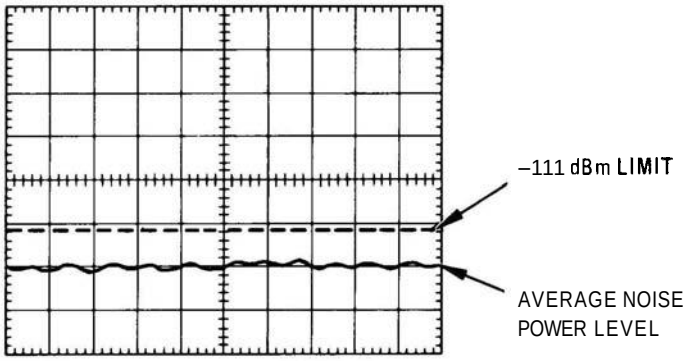

FIGURE 4-13. AVERAGE NOISE LEVEL MEASUREMENT, .01 – 3 GHz

EQUIPMENT:

Variable Persistence/Storage Display ..... HP 181T/TR
50Ω Termination ..... HP 909A, Opt. 012

NOTE

The HP 853A Spectrum Analyzer Display may be substituted for the HP **181T/TR** in this procedure.

NOTE

This test can be performed with no input termination if INPUT **ATTEN** is set to 20 dB. Note that the input attenuation must then be taken into consideration in establishing the equivalent REFERENCE LEVEL control setting for the measurement. A REFERENCE LEVEL setting of –40 **dBm** with 20 dB INPUT **ATTEN** is equivalent to a REFERENCE LEVEL setting of –60 **dBm** with **0** dB INPUT **ATTEN.**

PERFORMANCE TESTS

4-17. AVERAGE NOISE LEVEL (Cont'd)

PROCEDURE:

1. Set spectrum analyzer controls as follows:

FREQUENCY BAND GHz	.01 – 3
TUNING	0.010 GHz
FREQ SPAN/DIV	F
RESOLUTION BW	3 MHz, uncoupled
INPUT ATTEN	0 dB
REFERENCE LEVEL	–60 dBm
REF LEVEL FINE	0
Amplitude Scale	10 dB/DIV
SWEEP TIME/DIV	AUTO
SWEEP TRIGGER	FREE RUN
ALT IF	OFF
SIG IDENT	OFF
BL CLIP	OFF
VIDEO FILTER	Full CW (not in detent)

2. With FREQ SPAN/DIV set to F, set VIDEO FILTER fully clockwise, but not in detent. Adjust TUNING to position marker at frequency where displayed average noise level is highest.

NOTE

Do not tune marker beyond specified band edge.

3. Set VIDEO FILTER to detent and FREQ SPAN/DIV to 0.
4. Set RESOLUTION BW to 1 kHz.
5. Measure average noise level displayed on CRT (see Figure 4-13) and record results in Table 4-5.
6. Set FREQUENCY BAND GHz to 6 – 9 and repeat steps 2 through 5.
7. Set FREQUENCY BAND GHz to 3 – 9 and repeat steps 2 through 5.
8. Set FREQUENCY BAND GHz to 9 – 15 and repeat steps 2 through 5.
9. Set FREQUENCY BAND GHz to 6 – 15 and repeat steps 2 through 5.
10. Set FREQUENCY BAND GHz to 12.1 – 21 and repeat steps 2 through 5 for the frequency range of 12.1 – 18.0 GHz.

PERFORMANCE TESTS

4-17. AVERAGE NOISE LEVEL (Cont'd)

NOTE

Do not tune above 18.0 GHz for this step.

11. Repeat steps 2 through 5 for the frequency range of 18.0–21.0 GHz.

12. Repeat entire procedure with ALT IF on.

TABLE 4-5. AVERAGE NOISE LEVEL

FREQUENCY BAND GHz Setting	Specified Frequency Range (GHz)		Average Noise Level		
	Reg. IF	ALT IF	Maximum	Actual (Reg. IF)	Actual (ALT IF)
.01–3	0.010–3.060	0.025–3.060	–111 dBm	– _____ dBm	– _____ dBm
6–9	6.035–9.060	6.020–9.060	–108 dBm	– _____ dBm	– _____ dBm
3–9	3.033–9.120	3.048–9.120	–103 dBm	– _____ dBm	– _____ dBm
9–15	9.058–15.120	9.043–15.120	–98 dBm	– _____ dBm	– _____ dBm
6–15	6.055–15.180	6.070–15.180	–93 dBm	– _____ dBm	– _____ dBm
12.1–21	12.080–18.000	12.065–18.000	–92 dBm	– _____ dBm	– _____ dBm
12.1–21	18.000–21.000	18.000–21.000	–90 dBm	– _____ dBm	– _____ dBm

PERFORMANCE TESTS

4-18. RESIDUAL RESPONSES

SPECIFICATION:

Residual responses are less than −90 dBm (0.01–3.06 GHz) with 0 dB input attenuation and no signal present at input. They are less than −90 dBm (0.025–3.06 GHz) with ALT IF selected.

DESCRIPTION:

Signals present on the display without an input signal applied to the spectrum analyzer are residual responses. The .01 – 3 GHz frequency band is checked for residual responses greater than −90 dBm.

EQUIPMENT:

Variable Persistence/Storage Display ..... HP 181T/TR
50Ω Termination, Type N (m) ..... HP 909A, Opt. 012

NOTE

The HP 853A Spectrum Analyzer Display may be substituted for the HP 181T/TR in this procedure.

NOTE

This test can be performed with no input termination if INPUT ATTEN is set to 20 dB. Note that the input attenuation must then be taken into consideration in establishing the equivalent REFERENCE LEVEL control setting for the measurement. A REFERENCE LEVEL setting of −40 dBm with 20 dB INPUT ATTEN is equivalent to a REFERENCE LEVEL setting of −60 dBm with 0 dB INPUT ATTEN.

PROCEDURE:

1. Set spectrum analyzer controls as follows:

FREQUENCY BAND GHz ..... .01 – 3
TUNING ..... 0.050 GHz
FREQ SPAN/DIV ..... 10 MHz
RESOLUTION BW ..... 1 MHz, uncoupled
INPUT ATTEN ..... 0 dB
REFERENCE LEVEL ..... −60 dBm
REF LEVEL FINE 0
Amplitude Scale ..... 10 dB/DIV
SWEEP TIME/DIV ..... AUTO
SWEEP TRIGGER ..... FREE RUN
ALT IF ..... OFF
SIG IDENT ..... OFF
BLCLIP ..... OFF
VIDEO FILTER ..... 12 o'clock

PERFORMANCE TESTS

4-18. RESIDUAL RESPONSES (Cont'd)

2. Terminate INPUT 50Ω connector with 50-ohm termination.

3. Adjust TUNING control to position LO feedthrough signal on leftmost vertical graticule line.

4. Set RESOLUTION BW control to 10 kHz, leaving FREQ SPAN/DIV set to 10 MHz. Adjust BL CLIP control clockwise until just the peaks of the noise are displayed. Set the SWEEP TRIGGER control to SINGLE and display PERSISTENCE control to MAX.

5. Set display to WRITE and momentarily press ERASE. Turn SWEEP TRIGGER control clockwise to trigger a single sweep, adjusting BL CLIP and display INTENSITY controls until just the peaks of the noise are displayed. Press ERASE and trigger another sweep.

6. Set display to VIEW and check for residual responses greater than −90 dBm. Record frequency and amplitude of residual response with the greatest amplitude.

_____ GHz

_____ dBm

NOTE

Residual responses are often visible within 10 MHz of the HP 8559A LO feedthrough signal (25 MHz with ALT IF selected). These residual responses are not within the instrument's specified frequency range and should be excluded from consideration in this performance test.

7. Increase TUNING control setting in 100-MHz increments and use procedure of steps 5 – 7 to check for residual responses from 10 MHz to 3.060 GHz (25 MHz – 3.060 GHz with ALT IF selected).

PERFORMANCE TESTS

4-19. FREQUENCY RESPONSE

SPECIFICATION:

Frequency response measured with 0 or 10 dB of input attenuation includes input attenuator flatness, mixer flatness, and band-to-band amplitude variation. Table 4-6 shows the frequency response specifications.

TABLE 4-6. FREQUENCY RESPONSE SPECIFICATIONS

FREQUENCY BAND (GHz)	Frequency Response (±dB Maximum)
.01–3	1.0
6–9	1.0
3–9	1.5
9–15	1.8
6–15	2.1
12.1–18.0	2.3
18.0–21.0	3.0

DESCRIPTION:

Frequency response is checked in each frequency band. With the spectrum analyzer set to full sweep, an RF input signal is very slowly swept across the entire frequency band. The resulting display is a series of narrow signals that vary in height across the CRT. Since the RF source is leveled and held flat across each frequency band, variations in amplitude on the display represent variations in the frequency response of the spectrum analyzer. Leveling within reasonable limits becomes difficult from 18 GHz to 21 GHz, so the RF output at the power splitter is characterized and compensated for when making the measurement of this frequency range.

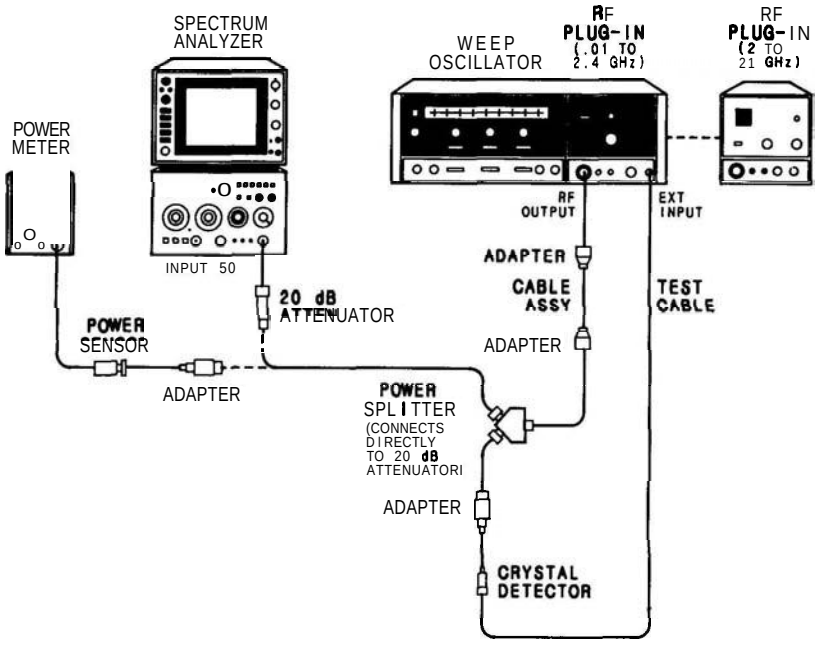

FIGURE 4-14. FREQUENCY RESPONSE TEST SETUP

PERFORMANCE TESTS

4-19. FREQUENCY RESPONSE **(Cont'd)**

NOTE

The HP 853A Spectrum Analyzer Display is not recommended for use in this procedure.

The HP **8350A** Sweep Oscillator may be substituted for the HP **8620C** in this procedure, if necessary.

EQUIPMENT:

Variable Persistence/Storage Display	HP 181T/TR
Sweep Oscillator	HP 8620C
RF Plug-in	HP 86222A
RF Plug-in	HP 86290B-H08
Power Meter	HP 435A/B
Power Sensor	HP 8485A
Power Splitter	HP 11667A, Opt. C16
Attenuator, 20-dB	HP 8491B, Opt. 020
Crystal Detector	HP 33330C
Adapter, Type N (m) to SMA (f) (2 required)	HP 1250-1250
Adapter, Type N (f) to SMA (f)	HP 1250-1745
Adapter, Type N (m) to N (m)	HP 1250-0778
Test Cable, SMC (m) to BNC (m)	HP 11592-60001
Cable Assembly, SMA (m) to SMA (m)	HP 8120-1578

PROCEDURE:

1. Set equipment controls as follows:

Spectrum Analyzer:

FREQUENCY BAND GHz	.01 – 3
TUNING	0.000 GHz
FREQ SPAN/DIV	10 MHz
RESOLUTION BW	300 kHz, coupled
INPUT ATTEN	0 dB
REFERENCE LEVEL	– 20 dBm
REF LEVEL FINE	– 4
Amplitude Scale	10 dB/DIV
SWEEP TIME/DIV	AUTO
SWEEP TRIGGER	FREE RUN
ALT IF	OFF
SIG IDENT	OFF
BL CLIP	OFF
VIDEO FILTER	Full CW (not in detent)

PERFORMANCE TESTS

4-19. FREQUENCY RESPONSE (Cont'd)

Sweep Oscillator:

CW Frequency	0.100 GHz
MARKERS	OFF
SWEEP MODE	AUTO (or TIME)
SWEEP TRIGGER	EXT
SWEEP TIME-SEC	100
RF OFF-ON	OFF
ALC Switch	EXT
POWER LEVEL	Midrange
RF BLANKING (Rear Panel)	ON
FM-NORM-PL (Rear Panel)	NORM
1 kHz SQ WAVE (Rear Panel)	OFF

2. Center LO feedthrough signal on CRT with spectrum analyzer TUNING control. Adjust FREQ CAL for a FREQUENCY GHz readout of 0.000.

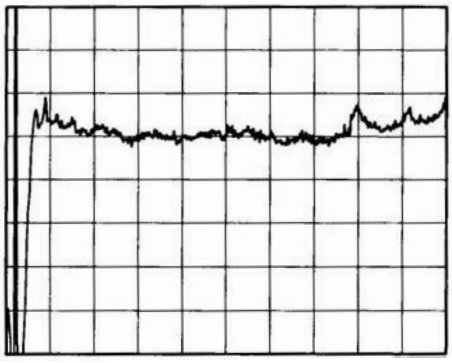

FIGURE 4-15. TYPICAL FREQUENCY RESPONSE FOR .01 TO 2.4 GHz

3. Using 0.01 – 2.4 GHz sweep oscillator plug-in, connect equipment as shown in Figure 4-14. Connect output of power splitter, through 20-dB attenuator, to spectrum analyzer input. Turn sweep oscillator RF power ON and adjust ALC GAIN control for leveled output indication.

NOTE

Use maximum possible ALC **GAIN** to avoid leveling errors during swept measurements.

PERFORMANCE TESTS

4-19. FREQUENCY RESPONSE (Cont'd)

4. Adjust spectrum analyzer TUNING control for a FREQUENCY GHz readout of 0.100. Set sweep oscillator to CW with frequency of 100 MHz and use CW control to center signal on spectrum analyzer display.

5. Calibrate and zero power sensor and meter. Disconnect power splitter from 20-dB attenuator and connect to power sensor. Adjust sweep oscillator POWER LEVEL control for a power meter indication of −8 dBm.

6. Connect output of power splitter through 20-dB attenuator directly (do not use cable) to spectrum analyzer input. Select Amplitude Scale setting of 1 dB/DIV, and adjust REF LEVEL FINE control as necessary to place peak of 100 MHz signal at center horizontal graticule line of spectrum analyzer display.

7. Adjust spectrum analyzer TUNING control for a FREQUENCY GHz readout of 0.060. Adjust sweep oscillator CW control for 60 MHz signal, centered on spectrum analyzer display.

8. Set sweep oscillator AF control for 100 MHz sweep. Adjust spectrum analyzer display PERSISTENCE control fully clockwise. Adjust sweep oscillator SWEEP TIME vernier for slow sweep (30 seconds or longer) and trigger a sweep. Record greatest positive and greatest negative deviation of signal peaks from center horizontal graticule line (10 MHz to 110 MHz).

Maximum _____ divisions

Minimum _____ divisions

9. Adjust spectrum analyzer TUNING control for a FREQUENCY GHz readout of 0.100. Set sweep oscillator to CW with frequency of 100 MHz and use CW control to center signal on spectrum analyzer display.

10. Set spectrum analyzer FREQ SPAN/DIV control to F (full band) and RESOLUTION BW control to 3 MHz. Adjust TUNING control fully clockwise to position tuning marker at high end of selected frequency band. Adjust REF LEVEL FINE control as necessary to place peak of 100 MHz signal (near LO feed-through signal) at center horizontal graticule line of spectrum analyzer display.

11. Set sweep oscillator for FULL BAND (10 MHz to 2.4 GHz) and trigger a sweep. Record greatest positive and greatest negative deviation of signal peaks from center horizontal graticule line (10 MHz to 2.4 GHz). Record deviation of signal peak located at 8th vertical graticule line (approximately 2.1 GHz).

Maximum _____ divisions

Minimum _____ divisions

8th graticule line _____ divisions

12. Remove 0.01 – 2.4 GHz RF Plug-in from sweep oscillator mainframe and replace with 2 – 22 GHz RF Plug-in. Select band 4 (2.0 – 22 GHz) on HP 8620C sweep oscillator.

13. Set sweep oscillator to CW with frequency of 2.1 GHz and use CW control to position signal on 8th vertical graticule line of spectrum analyzer display. Adjust ALC GAIN control for leveled sweep oscillator output and adjust POWER LEVEL control to place signal peak at same amplitude measured in step 11.

PERFORMANCE TESTS

4-19. FREQUENCY RESPONSE (Cont'd)

NOTE

Use maximum possible ALC **GAIN** to avoid leveling errors during swept measurements.

Do not adjust spectrum analyzer REF LEVEL **FINE** control or sweep **oscillator** POWER LEVEL control during the remaining steps of this performance test.

14. Adjust spectrum analyzer TUNING control fully counterclockwise to position tuning marker at low end of selected frequency band. Set sweep oscillator CW control to 2.5 GHz and AF control for 1 GHz sweep. Trigger a sweep, and record greatest positive and greatest negative deviation of signal peaks from center horizontal graticule line (2 GHz to 3 GHz).

Maximum _____ divisions

Minimum _____ divisions

NOTE

It is normal for the HP **8559A** to exhibit baseline lift with an input signal at approximately 3.0075 GHz (2.9925 with ALT **IF** selected). Adjust sweep oscillator sweep range as necessary to avoid baseline lift during frequency response measurements.

If frequency response appears out of specification near a band edge, use a frequency counter with sweep oscillator in CW to ensure the frequency in question is within the specified band.

15. Compare values recorded in steps 8, 11, and 14, and record overall greatest positive and greatest negative deviation from center horizontal graticule line for entire .01 – 3 GHz frequency band. Frequency response (deviation from center horizontal graticule line) should not exceed ± 1.0 dB (± 1.0 division).

Maximum _____ divisions (.01 – 3 GHz)

Minimum _____ divisions (.01 – 3 GHz)

16. Calculate mean deviation for .01 – 3 GHz frequency band using maximum and minimum values recorded in step 15. (For example, a maximum of + 0.5 and a minimum of – 0.7 results in a mean deviation of – 0.1)

$$\text{Mean deviation} = \frac{\text{Maximum} + \text{Minimum}}{2} = \_\_\_\_\_ \text{ divisions}$$

PERFORMANCE TESTS

4.19. FREQUENCY RESPONSE **(Cont'd)**

Frequency Response, 3 – 18 **GHz**

NOTE

For the higher frequency bands, multiple responses may appear on spectrum analyzer display during frequency response measurement. Adjust INTENSITY control as necessary for optimum display of in-band signal peaks.

17. Select 6 – 9 GHz frequency band on spectrum analyzer. Set sweep oscillator to CW and frequency to 7.5 GHz. Use CW control to center signal on spectrum analyzer display. Set AF control for 3 GHz and trigger a sweep. Adjust spectrum analyzer TUNING control clockwise several turns to reposition tuning marker. Trigger another sweep. Record greatest positive and greatest negative deviation of signal peaks from center horizontal graticule line (neglect deviations caused by tuning marker).

Maximum _____ divisions

Minimum _____ divisions

18. To calculate frequency response for 6 – 9 GHz frequency band, subtract mean deviation of step 16 from maximum and minimum values recorded in step 17. Frequency response should not exceed ± 1.0 dB (± 1.0 division).

Maximum _____ divisions (6 – 9 GHz)

Minimum _____ divisions (6 – 9 GHz)

19. Select 3 – 9 GHz frequency band on spectrum analyzer. Set sweep oscillator to CW and frequency to 6.0 GHz. Use CW control to center signal on spectrum analyzer display. Set AF control for 6 GHz, and trigger a sweep. Adjust spectrum analyzer TUNING control to reposition tuning marker. Trigger another sweep. Record greatest positive and greatest negative deviation of signal peaks from center horizontal graticule line (neglect deviations caused by tuning marker).

Maximum _____ divisions

Minimum _____ divisions

20. Subtract mean deviation of step 16 from maximum and minimum values recorded in step 19. Frequency response for 3 – 9 GHz frequency band should not exceed ± 1.5 dB (± 1.5 divisions).

Maximum _____ divisions (3 – 9 GHz)

Minimum _____ divisions (3 – 9 GHz)

PERFORMANCE TESTS

4-19. FREQUENCY RESPONSE (Cont'd)

21. Select 9 – 15 GHz frequency band on spectrum analyzer. Set sweep oscillator to CW and frequency to 12.0 GHz. Use CW control to center signal on spectrum analyzer display. Trigger a 6 GHz sweep. Adjust spectrum analyzer TUNING control to reposition tuning marker. Trigger another sweep. Record greatest positive and greatest negative deviation of signal peaks from center horizontal graticule line (neglect deviations caused by tuning marker).

Maximum _____ divisions

Minimum _____ divisions

22. Subtract mean deviation of step 16 from maximum and minimum values recorded in step 21. Frequency response for 9 – 15 GHz frequency band should not exceed ± 1.8 dB (± 1.8 divisions).

Maximum _____ divisions (9 – 15 GHz)

Minimum _____ divisions (9 – 15 GHz)

23. Select 6 – 15 GHz frequency band on spectrum analyzer. Set sweep oscillator to CW and frequency to 10.5 GHz. Use CW control to center signal on spectrum analyzer display. Set AF control for 9 GHz and trigger a sweep. Adjust spectrum analyzer TUNING control several turns to reposition tuning marker. Trigger another sweep. Record greatest positive and greatest negative deviation of signal peaks from center horizontal graticule line (neglect deviations caused by tuning marker).

Maximum _____ divisions

Minimum _____ divisions

23. Subtract mean deviation of step 16 from maximum and minimum values recorded in step 23. Frequency response for 6 – 15 GHz frequency band should not exceed ± 2.1 dB (± 2.1 divisions).

Maximum _____ divisions (6 – 15 GHz)

Minimum _____ divisions (6 – 15 GHz)

25. Select 12.1 – 21 GHz frequency band on spectrum analyzer and adjust TUNING control fully clockwise. Set sweep oscillator to CW and frequency to 15 GHz. Set AF control for 6 GHz and trigger a sweep. Record greatest positive and greatest negative deviation of signal peaks from center horizontal graticule line (12.1 GHz to 18 GHz).

Maximum _____ divisions

Minimum _____ divisions

PERFORMANCE TESTS

4-19. FREQUENCY RESPONSE (Cont'd)

26. Subtract mean deviation of step 16 from maximum and minimum values recorded in step 25. Frequency response for 12.1 – 18 GHz portion of 12.1 – 21 GHz frequency band should not exceed ± 2.3 dB (± 2.3 divisions).

Maximum _____ divisions (12.1 – 18 GHz)

Minimum _____ divisions (12.1 – 18 GHz)

Frequency Response, 18 – 21 GHz

27. Disconnect power splitter from 20-dB attenuator and connect it to the power sensor. Set sweep oscillator to CW with frequency of 18.0 GHz and measure output at power splitter with power meter.

_____ dBm

28. Use CW control to slowly tune sweep oscillator from 18 GHz to 21 GHz. Note all peak deviations from reference power level (recorded in step 27) and the frequencies at which they occur. Record frequencies and power levels in Table 4-7.

29. Connect output of power splitter through 20-dB attenuator to spectrum analyzer input. Adjust spectrum analyzer TUNING control counterclockwise several turns. Use CW control to tune sweep oscillator to frequencies recorded in step 28 and record deviation of signal peak from center horizontal graticule line.

30. Set sweep oscillator to CW with frequency of 19.5 GHz. Set AF control for 3 GHz and trigger a sweep. Note greatest positive and greatest negative deviation of signal peaks (18 GHz to 21 GHz). Use sweep oscillator CW control to tune to points of greatest deviation. Record frequencies and deviations from center horizontal graticule line in Table 4-7.

31. Disconnect power splitter from 20-dB attenuator and connect it to the power sensor. Use CW control to tune sweep oscillator to frequencies recorded in step 30 and record power levels in Table 4-7.

32. Algebraically subtract reference power level recorded in step 27 from each power meter indicated recorded in Table 4-7. Record results in Power Deviation column (see example). Add corresponding deviation from center horizontal graticule line to each power deviation and record results in Sum of Deviations column. Subtract mean deviation of step 16 from each value in Sum of Deviations column and record results in Deviation from Mean column. Frequency response for 18 – 21 GHz portion of 12.1 – 21 GHz frequency band should not exceed ± 3.0 dB (± 3 divisions).

PERFORMANCE TESTS

4-19. FREQUENCY RESPONSE (Cont'd)

TABLE 4-7. CORRECTING FOR FREQUENCY RESPONSE OF SIGNAL SOURCE

Frequency (GHz)	Power Meter Indication (dBm)	Power Deviation* (dB)	Deviation from Center Graticule Line (divisions or dB)	Sum of Deviations (dB)	Deviation from Mean (dB)
18.0	_____	0 (Ref.)	_____	_____	_____
_____	_____	_____	_____	_____	_____
_____	_____	_____	_____	_____	_____
_____	_____	_____	_____	_____	_____
_____	_____	_____	_____	_____	_____
_____	_____	_____	_____	_____	_____
_____	_____	_____	_____	_____	_____
_____	_____	_____	_____	_____	_____
_____	_____	_____	_____	_____	_____
_____	_____	_____	_____	_____	_____
_____	_____	_____	_____	_____	_____
_____	_____	_____	_____	_____	_____
_____	_____	_____	_____	_____	_____

*deviation relative to power meter indication at 18.0 GHz, recorded in step 27.

EXAMPLE (MEAN DEVIATION OF −0.1 dB)

Frequency (GHz)	Power Meter Indication (dBm)	Power Deviation* (dB)	Deviation from Center Graticule Line (divisions or dB)	Sum of Deviations (dB)	Deviation from Mean (dB)
18.0	−8.0	0 (Ref.)	−0.4	−0.4	−0.3
18.6	−9.0	−1.0	−1.0	−2.0	−1.9
19.6	−8.5	−0.5	−1.0	−1.5	−1.4
20.1	−7.0	+1.0	0.0	+1.0	+1.1
21.8	−9.0	−1.0	−0.4	−1.4	−1.3
20.6	−8.5	−0.5	−2.0	−2.5	−2.4
21.2	−7.5	+0.5	+1.5	+2.0	+2.1

PERFORMANCE TESTS

4-20. GAIN COMPRESSION

SPECIFICATION:

Gain compression is less than 0.5 dB for a −10 dBm input level with 0 dB attenuation.

DESCRIPTION:

Gain compression is measured by changing the power level at the spectrum analyzer input from −20 dBm to −10 dBm. The displayed signal level will change by less than 10 dB, indicating gain compression in the input mixer. Since a 10-dB change in IF gain is used to keep the signal trace near the same point on the display when the input power is increased, the error due to this IF gain change is first measured, then subtracted from the displayed deviation to give the deviation due only to gain compression.

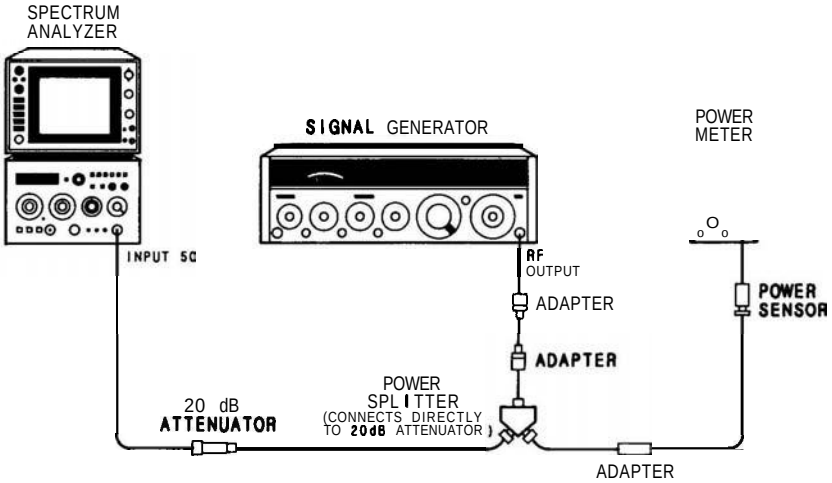

FIGURE 4-16. GAIN COMPRESSION TEST SETUP

EQUIPMENT:

Signal Generator	HP 8640B
Power Meter	HP 435A/B
Power Sensor	HP 8481A
Power Splitter	HP 11667A, Opt. C16
20-dB Attenuator	HP 8491B, Opt. 010
Adapter, Type N (m) to BNC (f) (2 required)	HP 1250-0780
Adapter, Type N (f) to N (f)	HP 1250-1472

PERFORMANCE TESTS

4-20. **GAIN** COMPRESSION (Cont'd)

PROCEDURE:

1. Set equipment controls as follows:

Spectrum Analyzer:

FREQUENCY BAND GHz	.01 – 3
TUNING	0.050 GHz
FREQ SPAN/DIV	100 kHz
RESOLUTION BW	300 kHz, uncoupled
INPUT ATTEN	10 dB
REFERENCE LEVEL	– 10 dBm
REF LEVEL FINE	– 10
Amplitude Scale	10 dB/DIV
SWEEP TIME/DIV	AUTO
SWEEP TRIGGER	FREE RUN
ALT IF	OFF
SIG IDENT	OFF
BLCLIP	OFF
VIDEO FILTER	OFF

Signal Generator:

COUNTER MODE	INT
AM	OFF
FM	OFF
FREQUENCY TUNE	50 MHz
RF	ON
OUTPUT LEVEL	– 4 dBm

2. Connect equipment as shown in Figure 4-16. Note that the 10-dB attenuator is placed between the power splitter and spectrum analyzer INPUT 50Ω connector.

3. Adjust signal generator OUTPUT LEVEL control for a power meter reading of – 10 dBm (– 20 dBm at spectrum analyzer INPUT 50Ω connector).

4. Adjust spectrum analyzer TUNING control to center 50 MHz signal on CRT. Set Amplitude Scale control to 1 dB/DIV and adjust REF LEVEL FINE control to place peak of signal at a convenient horizontal graticule line other than top graticule line.

5. Adjust signal generator OUTPUT LEVEL control for a power meter reading of 0 dBm (– 10 dBm at spectrum analyzer INPUT 50Ω connector).

6. Set spectrum analyzer REFERENCE LEVEL control to 0 dBm, leaving REF LEVEL FINE control at setting established in step 4. Record deviation of signal peak from reference graticule line of step 4 (step-gain error). Values above reference line are positive (+); those below are negative (–).

_____ dB

PERFORMANCE TESTS

4-20. **GAIN** COMPRESSION (Cont'd)

7. Adjust signal generator OUTPUT LEVEL control for a power meter reading of −10 dBm (−20 dBm at spectrum analyzer 50Ω connector).

8. Set spectrum analyzer INPUT ATTEN control to 0 dBm, REFERENCE LEVEL control to −20 dBm, and REF LEVEL FINE control to 0. Adjust REF LEVEL CAL control to place peak of signal at reference graticule line of step 4.

9. Adjust signal generator OUTPUT LEVEL control for a power meter reading of 0 dBm (−10 dBm at spectrum analyzer 50Ω connector).

10. Set spectrum analyzer REFERENCE LEVEL control to −10 dBm. Record deviation of signal peak from reference graticule line of step 4.

_____ dB

11. Calculate gain compression by algebraically subtracting step 9 gain error (step 4) from deviation of signal peak (step 7). Gain compression should be less than 0.5 dB,

_____ dB

12. Set spectrum analyzer INPUT ATTEN control to 10 dB and REFERENCE LEVEL control to −10 dBm. Connect CAL OUTPUT to INPUT 50Ω connector and recalibrate REF LEVEL CAL control setting.

PERFORMANCE TESTS

4-21. BANDWIDTH SWITCHING (AMPLITUDE VARIATION)

SPECIFICATION:

Bandwidths 3 MHz to 300 kHz: $< \pm 0.5$ dB
Bandwidths 3 MHz to 1 kHz: $< \pm 1.0$ dB

DESCRIPTION:

The CAL OUTPUT signal is applied to INPUT 50Ω connector and displayed on CRT. The peak of displayed 35-MHz signal is centered on CRT and adjusted for a vertical deflection of several divisions. The amplitude variation of the signal is measured for each RESOLUTION BW control setting. The overall variation between RESOLUTION BW settings of 3 MHz through 300 kHz should be less than 1.0 dB (± 0.5 dB). The overall variation between RESOLUTION BW settings of 3 MHz through 1 kHz should be less than 2.0 dB (± 1.0 dB).

PROCEDURE:

1. Set spectrum analyzer controls as follows:

FREQUENCY BAND GHz	.01 – 3
TUNING	0.035 GHz
FREQ SPAN/DIV	1 MHz
RESOLUTION BW	3 MHz, uncoupled
INPUT ATTEN	10 dB
REFERENCE LEVEL	0 dBm
REF LEVEL FINE	–10
Amplitude Scale	1 dB/DIV
SWEEP TIME/DIV	AUTO
SWEEP TRIGGER	FREE RUN
ALT IF	OFF
SIG IDENT	OFF
BL CLIP	OFF
VIDEO FILTER	OFF

2. Connect CAL OUTPUT signal to INPUT 50Ω connector.

3. Adjust TUNING control to center 35-MHz signal on CRT.

4. Adjust REF LEVEL FINE control to position peak of signal seven divisions above graticule baseline.

5. Set RESOLUTION BW and FREQ SPAN/DIV controls to settings indicated in Table 4-8. Record deviation of signal peak from reference graticule line for each RESOLUTION BW control setting. Values above reference line set in step 4 are positive (+); values below reference line are negative (–).

6. To find overall variation in Table 4-8, algebraically subtract greatest negative amplitude deviation from greatest positive amplitude deviation. If all changes in amplitude are of the same sign, overall variation is largest positive or largest negative change in amplitude. Overall variation between 3 MHz and 300 kHz RESOLUTION BW setting should be < 1.0 dB (± 0.5 dB). Overall variation between 3 MHz and 1 kHz RESOLUTION BW settings should be < 2.0 dB (± 1.0 dB).

PERFORMANCE TESTS

4-21. BANDWIDTH SWITCHING (AMPLITUDE VARIATION) (Cont'd)

TABLE 4-8. BANDWIDTH SWITCHING (AMPLITUDE VARIATION)

RESOLUTION BW Setting	FREQ SPAN/DIV Setting	Amplitude Deviation (dB)	Overall Variation Between 3 MHz and 300 kHz RESOLUTION BW Settings (dB)	Overall Variation Between 3 MHz and 1 kHz RESOLUTION BW Settings (dB)
3 MHz	1 MHz	0 (Ref)		
1 MHz	500kHz	———	———	
300kHz	100kHz	———		———
100kHz	50kHz	———		
30 kHz	10kHz	———		
10 kHz	10kHz	———		
3 kHz	10kHz	———		
1 kHz	10kHz	———		

PERFORMANCE TESTS

4-22. INPUT ATTENUATOR ACCURACY

SPECIFICATION:

Step Accuracy (0 dB to 60 dB): < ± 1.0 dB per 10-dB step, 0.01 to 18.0 GHz
Maximum Cumulative Step Error (0 dB to 60 dB): < ± 2.4 dB, 0.01 to 18.0 GHz

DESCRIPTION:

The input attenuator accuracy is tested over the range of 0 to 60 dB using an RF substitution method. A step attenuator that has been calibrated at 30 MHz by a Standards Laboratory is used for substitution. The known error of the calibrated attenuator is taken into account when computing the input attenuator accuracy.

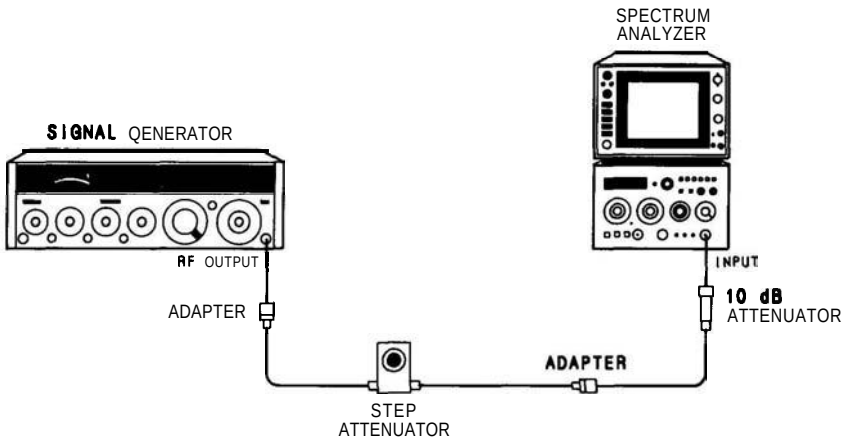

FIGURE 4-17. INPUT ATTENUATOR ACCURACY TEST SETUP

EQUIPMENT:

Signal Generator ..... HP 8640B
Step Attenuator (10 dB/step) ..... HP 355D, Opt. H82
10-dB Attenuator ..... HP 8491B, Opt. 010
Adapter, Type N (m) to BNC (f) (2 required) ..... HP 1250-0780

PERFORMANCE TESTS

4-22. INPUT ATTENUATOR ACCURACY (Cont'd)

PROCEDURE:

1. Connect equipment as shown in Figure 4-17 and set controls as follows:

Spectrum Analyzer:

FREQUENCY BAND GHz	.01 – 3
TUNING	30 MHz
FREQ SPAN/DIV	2 MHz
RESOLUTION BW	1 MHz
INPUT ATTEN	60 dB
REFERENCE LEVEL	0 dBm
REF LEVEL FINE	0
Amplitude Scale	10 dB/DIV
SWEEP TIME/DIV	AUTO
SWEEP TRIGGER	FREE RUN
ALT IF	OFF
SIG IDENT	OFF
BL CLIP	OFF
VIDEO FILTER	2 o'clock

Signal Generator:

COUNTER MODE	INT EXPAND X10
AM	OFF
FM	OFF
FREQUENCY TUNE	30.0 MHz
RF	ON
OUTPUT LEVEL	0 dBm

2. Set step attenuator to 0 dB and use spectrum analyzer TUNING control to center 30 MHz signal from signal generator on CRT display. Set FREQ SPAN/DIV to 20 kHz, RESOLUTION BW to 10 kHz, and Amplitude Scale to 1 dB/DIV.

3. Adjust signal generator OUTPUT LEVEL control to position peak of signal seven divisions above graticule baseline.

4. Set step attenuator and INPUT ATTEN control to settings indicated in Table 4-9. For each setting, record deviation of signal peak from reference graticule line set in step 3.

NOTE

The REFERENCE LEVEL control setting changes by 10 dB for every 10-dB change in INPUT **ATTEN.** Do not change the REFERENCE LEVEL setting after changing the INPUT **ATTEN** setting.

PERFORMANCE TESTS

4.22. INPUT ATTENUATOR ACCURACY (Cont'd)

TABLE 4-9. INPUT ATTENUATOR ACCURACY

INPUT ATTEN Setting (dB)	Step Attenuator Setting (dB)	Amplitude Deviation (dB)	Step Attenuator Error (Calibration) *	Corrected Deviation (dB)
60	0	0 (Ref)	(Ref)	0 (Ref)
50	10	_____	_____	_____
40	20	_____	_____	_____
30	30	_____	_____	_____
20	40	_____	_____	_____
10	50	_____	_____	_____
0	60	_____	_____	_____

*Attenuations > dial settings are positive (+). Attenuations < dial settings are negative (–). For example, 9.99 dB calibration for a 10 dB attenuator setting represents an error of –0.01 dB.

5. To compute corrected deviation for each setting, add step attenuator error to amplitude deviation. Corrected deviation should not exceed ± 1.0 dB between any two adjacent INPUT ATTEN setting.

_____ dB Maximum Error per 10-dB Step

6. Record maximum positive and maximum negative corrected deviation values. Difference between these two values (maximum cumulative step error) should not exceed 2.4 dB.

_____ dB Maximum Positive Corrected Deviation

_____ dB Maximum Negative Corrected Deviation

_____ dB Maximum Cumulative Step Error

PERFORMANCE TESTS

4-23. REFERENCE LEVEL ACCURACY

SPECIFICATION:

Step Accuracy (steps referenced with 0 dB input attenuation):
- −10 dBm to −80 dBm: ±0.5 dB
- −10 dBm to −100 dBm: ±1.0 dB

Vernier Accuracy: ±0.5 dB

DESCRIPTION:

The reference level accuracy is tested over the range of −10 dBm to −100 dBm by checking the IF gain steps in 1 dB/DIV (Log) and in LIN. The resulting maximum deviation in each case must be less than ±0.5 dB from −10 dBm to −80 dBm and less than ±1.0 dB from −10 dBm to −100 dBm.

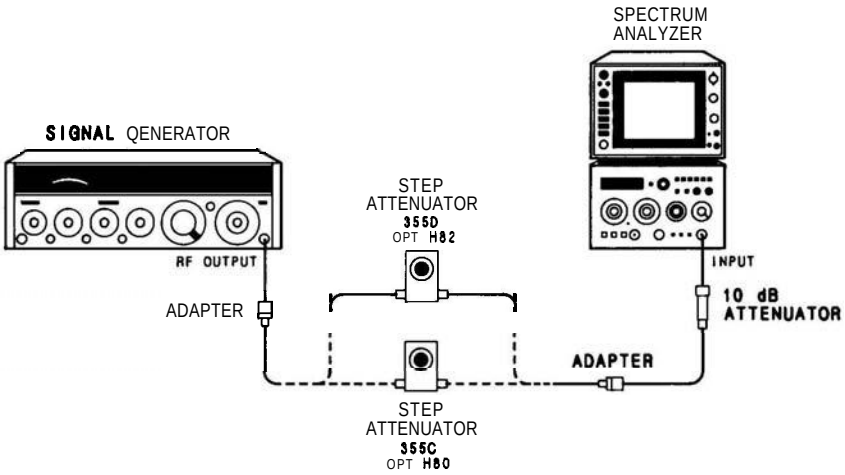

FIGURE 4-18. REFERENCE LEVEL ACCURACY TEST SETUP

EQUIPMENT:

Signal Generator	HP 8640B
10-dB Attenuator	HP 8491B, Opt. 010
Step Attenuator (1 dB/step)	HP 355C, Opt. H80
Step Attenuator (10 dB/step)	HP 355D, Opt. H82
Adapter, Type N (m) to BNC (f) (2 required)	HP 1250-0780

PERFORMANCE TESTS

4-23. REFERENCE LEVEL ACCURACY (Cont'd)

PROCEDURE:

Step Accuracy in Log Mode

1. Set equipment controls as follows:

Spectrum Analyzer:

FREQUENCY BAND GHz	.01 – 3
TUNING	30 MHz
FREQ SPAN/DIV	100 kHz
RESOLUTION BW	30 kHz, uncoupled
INPUT ATTEN	0 dB
REFERENCE LEVEL	– 10 dBm
REF LEVEL FINE	0
Amplitude Scale	1 dB/DIV
SWEEP TIME/DIV	AUTO
SWEEP TRIGGER	FREE RUN
ALT IF	OFF
SIG IDENT	OFF
BL CLIP	OFF
VIDEO FILTER	2 o'clock

Signal Generator:

COUNTER MODE	INT, EXPAND X10
AM	OFF
FM	OFF
FREQUENCY TUNE	30 MHz
RF	ON
OUTPUT LEVEL	– 2 dBm

2. Connect equipment as shown in Figure 4-18 using 10 dB step attenuator. Set step attenuator to 0 dB and adjust spectrum analyzer TUNING control to center 30 MHz signal on CRT. Set FREQ SPAN/DIV control to 10 kHz and RESOLUTION BW control to 3 kHz, adjusting TUNING control as necessary to keep signal centered on CRT.

3. Adjust signal generator OUTPUT LEVEL control to position peak of signal 6 divisions above graticule baseline. Set step attenuator and spectrum analyzer REFERENCE LEVEL control to settings indicated in Table 4-10. Record deviation of signal peak from 6th division for each setting.

4. To calculate Corrected Deviation, add Step Attenuator Error (calibration data at 30 MHz) to Deviation from 6th Division for each setting. Corrected Deviation should not exceed ± 0.5 dB from – 10 dBm to – 80 dBm, and should not exceed ± 1.0 dB from – 10 dBm to – 100 dBm. Record maximum values.

_____ dB (– 10 dBm to – 80 dBm)

_____ dB (– 10 dBm to – 100 dBm)

PERFORMANCE TESTS

4-23. REFERENCE LEVEL ACCURACY (Cont'd)

TABLE 4-10. IF GAIN ACCURACY IN LOG MODE

REFERENCE LEVEL Setting (dBm)	Step Attenuator Setting (dB)	Deviation from 6th Division (dB)	Step Attenuator Error (Calibration) * (dB)	Corrected Deviation (dB)
–10	0	0 (Ref)	(Ref)	0 (Ref)
–20	10	_____	_____	_____
–30	20	_____	_____	_____
–40	30	_____	_____	_____
–50	40	_____	_____	_____
–60	50	_____	_____	_____
–70	60	_____	_____	_____
–80	70	_____	_____	_____
–90	80	_____	_____	_____
–100	90	_____	_____	_____

*Attenuations > dial settings are positive (+). Attenuations < dial settings are negative (–). For example, 9.99 dB calibration for a 10 dB attenuator setting represents an error of –0.01 dB.

Step Accuracy in Linear Mode

5. Set spectrum analyzer Amplitude Scale switch to LIN and REFERENCE LEVEL control to –10 dBm. Set step attenuator to 0 dB. Readjust signal generator OUTPUT LEVEL control to position peak of signal 6 divisions above graticule baseline.

6. Set step attenuator and spectrum analyzer REFERENCE LEVEL control to settings indicated in Table 4-11. Record deviation of signal peak from 6th division for each setting.

7. Using Table 4-12, convert Deviation from 6th Division in Linear Mode to Deviation in dB for each setting. Record dB values in Table 4-11.

8. To calculate Corrected Deviation, add Step Attenuator Error to Deviation from 6th Division in dB for each setting. Corrected Deviations should not exceed ± 0.5 dB from –10 dBm to –80 dBm and ± 1.0 dB from –10 dBm to –100 dBm. Record maximum values.

_____ dB (–10 dBm to –80 dBm)

_____ dB (–10 dBm to –100 dBm)

PERFORMANCE TESTS

4-23. REFERENCE LEVEL ACCURACY (Cont'd)

TABLE 4-11. IF GAIN ACCURACY IN LINEAR MODE

REFERENCE LEVEL Setting (dBm)	Step Attenuator Setting (dB)	Deviation from 6th Division Linear Mode (div.)	Deviation from 6th Division in dB*	Step Attenuator Error (Calibration)**(dB)	Corrected Deviation (dB)
–10	0	0(Ref)	0(Ref)	Ref	0(Ref)
–20	10	_____	_____	_____	_____
–30	20	_____	_____	_____	_____
–40	30	_____	_____	_____	_____
–50	40	_____	_____	_____	_____
–60	50	_____	_____	_____	_____
–70	60	_____	_____	_____	_____
–80	70	_____	_____	_____	_____
–90	80	_____	_____	_____	_____
–100	90	_____	_____	_____	_____

*Use Table 4-12 to convert deviation in linear mode to deviation in dB.
**Attenuations > dial settings are positive (+). Attenuations < dial settings are negative (–).

TABLE 4-12. CONVERSION TABLE, DEVIATION IN LINEAR MODE

POSITIVE DEVIATIONS (Above 6th division from graticule baseline)		NEGATIVE DEVIATIONS (Below 6th division from graticule baseline)	
Linear (Divisions)	dB	Linear (Divisions)	dB
0	0	0	0
+.1	+0.14	–.1	–0.15
+.2	+0.28	–.2	–0.29
+.3	+0.42	–.3	–0.45
+.4	+0.56	–.4	–0.60
+.5	+0.70	–.5	–0.76
+.6	+0.82	–.6	–0.92
+.7	+0.96	–.7	–1.08
+.8	+1.09	–.8	–1.24
+.9	+1.21	–.9	–1.41
+1.0	+1.34	–1.0	–1.58
+1.1	+1.46	–1.1	–1.76
+1.2	+1.58	–1.2	–1.94
+1.3	+1.70		
+1.4	+1.82		
+1.5	+1.94		

PERFORMANCE TESTS

4-23. REFERENCE LEVEL ACCURACY (Cont'd)

Vernier Accuracy

9. Replace 10-dB step attenuator with 1-dB step attenuator. Set spectrum analyzer controls as follows:

FREQUENCY BAND GHz	.01 – 3
TUNING	0.030 GHz
FREQ SPAN/DIV	50 kHz
RESOLUTION BW	300 kHz, uncoupled
INPUT ATTEN	0 dB
REFERENCE LEVEL	– 10 dBm
REF LEVEL FINE	0
Amplitude Scale	1 dB/DIV
SWEEP TIME/DIV	AUTO
SWEEP TRIGGER	FREE RUN
ALT IF	OFF
SIG IDENT	OFF
BLCLIP	OFF
VIDEO FILTER	2 o'clock

10. Set step attenuator to 0 dB. Center signal on CRT and adjust signal generator OUTPUT LEVEL control to position peak of signal 6 divisions above graticule baseline. Set step attenuator and spectrum analyzer REFERENCE LEVEL FINE control to settings indicated in Table 4-13. Record deviation of signal peak from 6th division for each setting.

11. To compute Corrected Deviation, add Step Attenuator Error to Deviation from 6th Division for each setting. Corrected Deviation should not exceed ± 0.5 dB for each setting. Record maximum value.

TABLE 4-13. VERNIER ACCURACY _____ dB

Step Attenuator Setting (dB)	REFERENCE LEVEL FINE Setting	Deviation from 6th Division (dB)	Step Attenuator Error (Calibration)* (dB)	Corrected Deviation (dB)
0	0	0 (Ref)	(Ref)	0 (Ref)
1	–1	_____	_____	_____
2	–2	_____	_____	_____
3	–3	_____	_____	_____
4	–4	_____	_____	_____
5	–5	_____	_____	_____
6	–6	_____	_____	_____
7	–7	_____	_____	_____
8	–8	_____	_____	_____
9	–9	_____	_____	_____
10	–10	_____	_____	_____
11	–11	_____	_____	_____
12	–12	_____	_____	_____

*Attenuations > dial settings are positive (+). Attenuations < dial settings are negative (–).

PERFORMANCE TESTS

4-24. SWEEP TIME ACCURACY

SPECIFICATION:

There are 20 selectable and calibrated sweep times in a 1-2-5 sequence from 2 μsec/DIV to 10 sec/DIV (excluding 2 sec/DIV).

Sweep time accuracy: ±10% (±20% for 5 and 10 sec/DIV)

DESCRIPTION:

For SWEEP TIME/DIV control settings of 10 msec and less, the triangle-wave output of a function generator is used to modulate a 100-MHz signal applied to the spectrum analyzer input. This signal is demodulated in zero span, displaying a triangular waveform on the CRT. The function generator is tuned to align the waveform with the vertical CRT graticule lines. The period of the function generator output is then measured with a counter to determine the sweep time.

For SWEEP TIME/DIV control settings of 20 msec and greater, the display (AUX B) PEN LIFT/BLANKING output is connected directly to the counter. The blanking signal is "low" during a spectrum analyzer sweep; the time interval between the falling and rising edges is measured to determine the sweep speed.

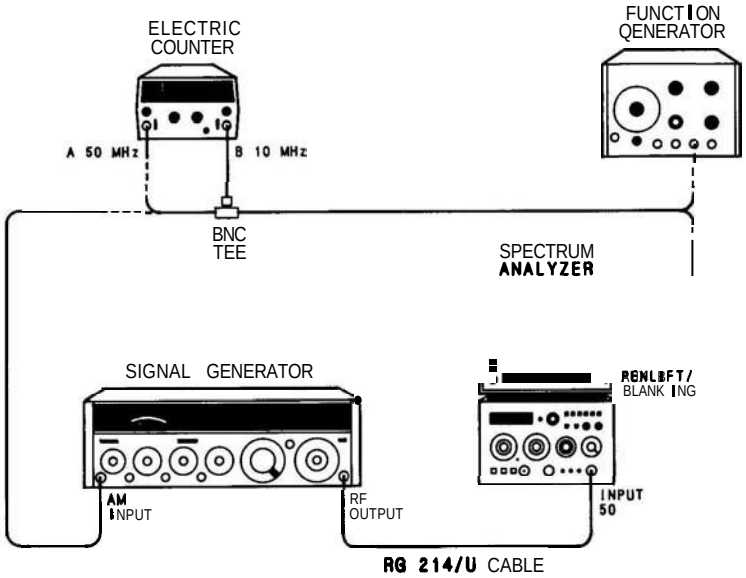

FIGURE 4-19. SWEEP TIME ACCURACY TEST SETUP

EQUIPMENT:

Signal Generator	HP 8640B
Function Generator	HP 3310A
50 MHz Universal Counter	HP 5300B/5302A
BNC Tee	HP 1250-0781
Cable Assembly RG-214/U with Type N Connectors	HP 11500A

PERFORMANCE TESTS

4-24. SWEEP TIME ACCURACY (Cont'd)

PROCEDURE:

1. Set equipment controls as follows:

Spectrum Analyzer:

FREQUENCY BAND GHz	.01 – 3
TUNING	0.100 GHz
FREQ SPAN/DIV	10 MHz
RESOLUTION BW	3 MHz, uncoupled
INPUT ATTEN	10 dB
REFERENCE LEVEL	– 10 dBm
REF LEVEL FINE	0
Amplitude Scale	LIN
SWEEP TIME/DIV	AUTO
SWEEP TRIGGER	FREE RUN
ALT IF	OFF
SIG IDENT	OFF
BL CLIP	OFF
VIDEO FILTER	OFF

Signal Generator:

COUNTER MODE	INT, EXPAND X10
AM	OFF
FM	OFF
FREQUENCY TUNE	100 MHz
RF	ON
OUTPUT LEVEL	– 10 dBm

Function Generator:

FUNCTION	TRI
RANGE	10K
Frequency	250 kHz
DC OFFSET LEVEL	0

50 MHz Universal Counter:

FUNCTION	PER AVG B
SAMPLE RATE	Full counterclockwise
TIME BASE	1 ms
SENSITIVITY (A)	9 o'clock
A 50 MHz Input	(falling edge)
SENSITIVITY (B)	Full clockwise
B 10 MHz Input	(rising edge)

PERFORMANCE TESTS

4-24. SWEEP TIME ACCURACY (Cont'd)

2. Connect equipment as shown in Figure 4-19. Connect counter's B 10 MHz input to the function generator low output and the signal generator's AM input.

3. Adjust spectrum analyzer TUNING control to center 100-MHz signal on CRT. Set FREQ SPAN/DIV control to 0, leaving RESOLUTION BW control at 3 MHz setting. Set SWEEP TIME/DIV control to 2 μsec.

4. Set AM switch of HP 8640B to AC position. Adjust function generator AMPLITUDE control and signal generator AM MODULATION control for 50 percent modulation as indicated on the signal generator meter.

5. Set spectrum analyzer SWEEP TRIGGER control to VIDEO. Adjust REFERENCE LEVEL and REF LEVEL FINE controls to center waveform on CRT.

6. Adjust function generator Frequency vernier to display exactly five cycles of triangle wave modulation on CRT, as shown in Figure 4-20a. Counter should indicate an average period of 4.00 ± 0.04 ps.

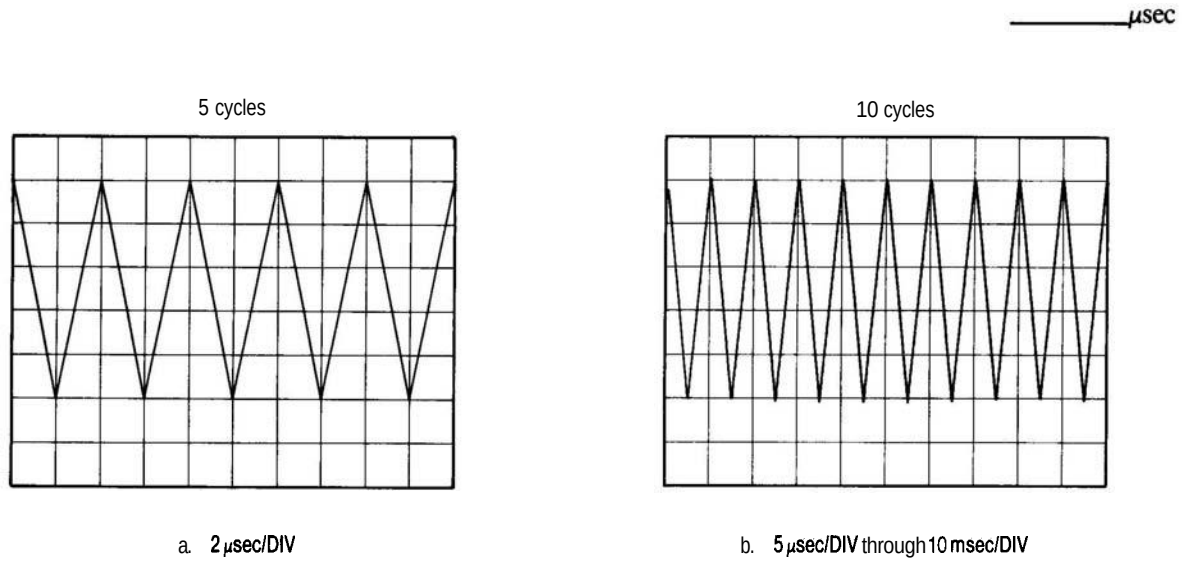

FIGURE 4-20. SWEEP TIME ACCURACY

7. Calculate actual sweep time per division by dividing average period from step 6 by 2. Record value in Table 4-14.

8. For spectrum analyzer SWEEP TIME/DIV control settings of 5 psec through 10 msec, adjust function generator RANGE and frequency controls to display exactly 10 cycles of triangle wave modulation on CRT, as shown in Figure 4-20b. Average period readings displayed on counter correspond to actual sweep time per division. Record values in Table 4-14.

PERFORMANCE TESTS

4-24. SWEEP TIME ACCURACY (Cont'd)

TABLE 4-14. SWEEP TIME ACCURACY, 2 μSEC THROUGH 10 MSEC

SWEEP TIME/DIV Setting	Function Generator Frequency (Approx.)	Sweep Time per Division		
		Minimum	Actual	Maximum
2 psec	250 kHz	1.80 psec	_____ μsec	2.20 psec
5 psec	200 kHz	4.40 psec	_____ μsec	5.50 psec
10 psec	100 kHz	9.00 psec	_____ μsec	11.00 psec
20 psec	50 kHz	18.00 psec	_____ μsec	22.00 psec
50 psec	20 kHz	45.00 psec	_____ μsec	55.00 psec
.1 msec	10 kHz	90.0 psec	_____ μsec	110.0 psec
.2 msec	5 kHz	180.0 psec	_____ μsec	220.0 psec
.5 msec	2 kHz	450.0 psec	_____ μsec	550.0 psec
1 msec	1 kHz	900 psec	_____ μsec	1100 psec
2 msec	500 Hz	1800 psec	_____ μsec	2200 psec
5 msec	200 Hz	4500 psec	_____ μsec	5500 psec
10 msec	100 Hz	9.00 msec	_____ msec	11.00 msec

9. Connect display rear panel AUX B PENLIFT/BLANKING output to BNC tee at counter's B 10 MHz input. Connect other side of tee to counter's A 50 MHz input.

10. Set counter controls as follows:

FUNCTION ..... T.I. A to B
SAMPLE RATE ..... Full counterclockwise
TIME BASE ..... 0.1 ms
SENSITIVITY (A) ..... 9 o'clock
A 50 MHz Input ..... ⎺⎽⎺ (falling edge)
SENSITIVITY (B) ..... 9 o'clock
B 10 MHz Input ..... ⎽⎺⎽ (rising edge)

11. Set spectrum analyzer SWEEP TIME/DIV to 20 msec. Adjust counter's SENSITIVITY controls for a time interval reading of 0.2000 ± 0.0200 sec. Record sweep time value in Table 4-15.

12. Verify remaining spectrum analyzer SWEEP TIME/DIV control settings of 50 msec through 10 sec, recording sweep time values in Table 4-15.

PERFORMANCE TESTS

4-24. SWEEP TIME ACCURACY (Cont'd)

TABLE 4-15. SWEEP TIME ACCURACY, 20 MSEC THROUGH 10 SEC

WEEP TIME/DIV Setting	Sweep Time		
	Minimum	Actual	Maximum
20 msec	0.180 sec	_____ sec	0.220 sec
50 msec	0.450 sec	_____ sec	0.550 sec
.1 sec	0.90 sec	_____ sec	1.10 sec
.2 sec	1.80 sec	_____ sec	2.20 sec
.5 sec	4.50 sec	_____ sec	5.50 sec
1 sec	9.0 sec	_____ sec	11.0 sec
5 sec	40.0 sec	_____ sec	60.0 sec
10 sec	80.0 sec	_____ sec	120.0 sec

PERFORMANCE TESTS

4-25. CALIBRATOR OUTPUT ACCURACY

SPECIFICATION:

Amplitude: – 10 dBm ± 0.3 dB
Frequency: 35 MHz ± 400 kHz

DESCRIPTION:

The frequency of the calibrator output signal is measured with a microwave counter. The calibrator output level is measured using a power meter.

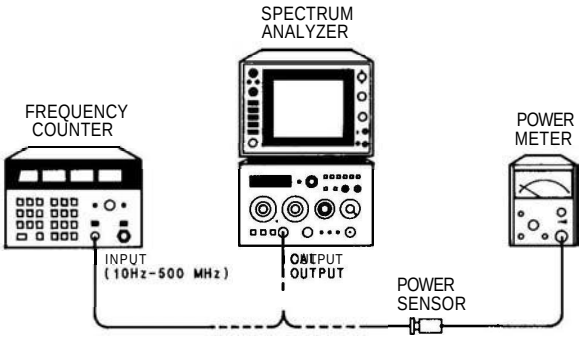

FIGURE 4-21. CALIBRATOR ACCURACY TEST SETUP

EQUIPMENT:

Frequency Counter ..... HP 5342A, Opt. 005
Power Meter ..... HP 435A/B
Power Sensor ..... HP 8481A

PROCEDURE:

1. Connect spectrum analyzer CAL OUTPUT to frequency counter's 10 Hz – 500 MHz (50Ω) input as shown in Figure 4-20. Measured output frequency should be 35 MHz ± 400 kHz.

2. Zero and calibrate power meter. Connect power sensor, through adapter, to spectrum analyzer's CAL OUTPUT and measure power level. Calibrator output level should be – 10 dBm ± 0.3 dB.

_____ dBm

PERFORMANCE TESTS

4-26. DISPLAY FIDELITY

SPECIFICATION:

Log Incremental Accuracy: ±0.1 dB per dB from Reference Level
Log Maximum Cumulative Error: < ±1.5 dB over entire 70-dB range
Linear Accuracy; ±3% of Reference Level

DESCRIPTION:

The amplitude of the log display amplifier is tested by connecting a DVM to the display (AUX A) VERTICAL OUTPUT connector. A wide resolution bandwidth setting is selected so the signal appears as a straight horizontal line on the CRT. The DVM is used to provide good resolution when checking for ±1 dB per 10 dB step (0.1 dB/dB).

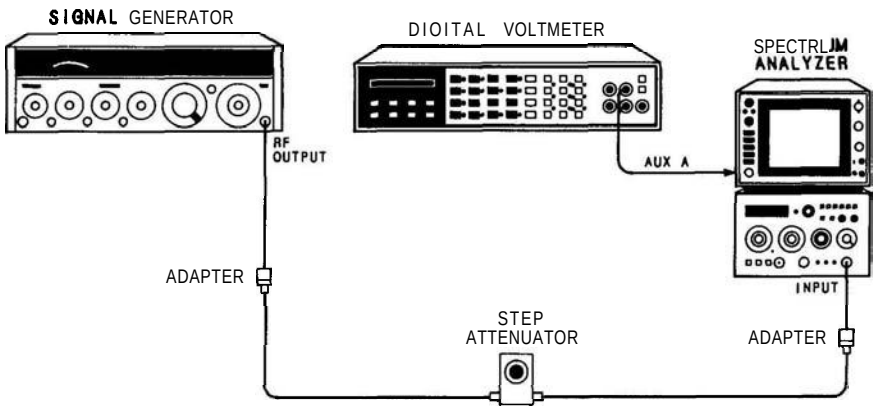

FIGURE 4-22. DISPLAY FIDELITY TEST SETUP

EQUIPMENT

Signal Generator ..... HP 8640B
Digital Voltmeter ..... HP 3556A
Step Attenuator (10 dB/step) ..... HP 355D, Opt. H82
Adapter, Type N (m) to BNC (f) (2 required) ..... HP 1250-0780
Cable, BNC to Banana Plug ..... HP 11001A

PROCEDURE:

Log Display Accuracy

1. Set equipment controls as follows:

Spectrum Analyzer:

FREQUENCY BAND GHz ..... .01 – 3
TUNING ..... 0.030 GHz

PERFORMANCE TESTS

4-26. DISPLAY FIDELITY (Cont'd)

FREQ SPAN/DIV ..... 500 kHz
RESOLUTION BW ..... 300 kHz, uncoupled
INPUT ATTEN ..... 10 dB
REFERENCE LEVEL ..... 0 dBm
REF LEVEL FINE 0
Amplitude Scale ..... LIN
SWEEP TIME/DIV ..... AUTO
SWEEP TRIGGER ..... FREE RUN
ALT IF ..... OFF
SIG IDENT ..... OFF
BL CLIP ..... OFF
VIDEO FILTER ..... OFF

Digital Voltmeter:

RANGE 100
FUNCTION ..... V (DC)
AUTO CAL ..... AUTO
TRIGGER ..... INTERNAL
MATH ..... OFF

Signal Generator:

COUNTER MODE ..... INT
AM ..... OFF
FM ..... OFF
FREQUENCY TUNE ..... 30 MHz
RF ..... ON
OUTPUT LEVEL ..... 0 dBm

2. With no signal at spectrum analyzer's INPUT 50Ω, measure and record offset voltage at (AUX A) VERTICAL OUTPUT connector.

_____ mV

3. Connect equipment as shown in Figure 4-22. Set step attenuator to 0 dB.

4. Set spectrum analyzer's Amplitude Scale to 10 dB/DIV and adjust TUNING control to center signal on CRT display.

5. Set spectrum analyzer's FREQ SPAN/DIV control to zero (0), VIDEO FILTER full CW (not in detent), and RESOLUTION BW control to 1 MHz. Adjust TUNING control for maximum reading on DVM.

6. Set signal generator OUTPUT LEVEL control for DVM reading of (+800 mV + offset (step 2) ±0.5 mV). Trace should be approximately at top CRT graticule line.

7. Record DVM readings for step attenuator settings from 0 dB through 70 dB, in Table 4-16.

PERFORMANCE TESTS

4-26. DISPLAY FIDELITY (Cont'd)

TABLE 4-16. AMPLITUDE LOG DISPLAY ACCURACY

Attenuator Setting (dB)	DVM Reading (mV)	Corrected DVM Reading* (mV)	Theoretical Reading (mV)	Theoretical Reading Subtracted From Corrected DVM Reading (mV)	Difference Between Adjacent Readings (mV)
0	_____	+800 (Ref.)	+800	0	_____
10	_____	_____	+700	_____	_____
20	_____	_____	+600	_____	_____
30	_____	_____	+500	_____	_____
40	_____	_____	+400	_____	_____
50	_____	_____	+300	_____	_____
60	_____	_____	+200	_____	_____
70	_____	_____	+100	_____	_____

*DVM Reading minus offset recorded in step 2.

EXAMPLE TABLE OF 4-16

Attenuator Setting (dB)	DVM Reading (mV)	Corrected DVM Reading* (mV)	Theoretical Reading (mV)	Theoretical Reading Subtracted From Corrected DVM Reading (mV)	Difference Between Adjacent Readings (mV)
0	+805	+800	+800	0	
10	+708	+703	+700	+3	–3
20	+599	+594	+600	–6	+9
30	+497	+492	+500	–8	+2
40	+406	+401	+400	+1	–9

*DVM Reading minus offset recorded in step 2.

8. After recording DVM readings for step attenuator settings from 0 dB through 70 dB, calculate each Corrected DVM Reading by algebraically subtracting offset recorded in step 2. Record results in Table 4-16 (see sample computations).

9. Algebraically subtract corresponding Theoretical Reading from each Corrected DVM Reading, recording results in Table 4-16. Maximum value should not exceed ± 15 mV, corresponding to ± 1.5 dB. Divide maximum value by 10 to calculate Log Maximum Cumulative Error (in dB).

_____ dB Log Maximum Cumulative Error

PERFORMANCE TESTS

4-26. DISPLAY FIDELITY (Cont'd)

10. Algebraically subtract each converted reading (Theoretical Reading Subtracted from Corrected DVM Reading) from previous converted reading. Record results in Table 4-16 (see sample computations). Maximum difference between adjacent readings should not exceed ± 10 mV, corresponding to ± 1 dB/10 dB or ± 0.1 dB/dB. Divide maximum value by 100 to calculate Log Incremental Error (in dB/dB).

_____ dB/dB Log Incremental Error

11. Replace 10-dB step attenuator with 1-dB step attenuator. Set step attenuator to 0 dB.

12. Set spectrum analyzer Amplitude Scale to LIN and adjust TUNING control for maximum reading on DVM.

13. Adjust signal generator OUTPUT LEVEL for DVM reading of 800 mV + offset (step 2) ± 0.5 mV. Trace should be approximately at top CRT graticule line.

14. Record DVM reading for step attenuator settings of 6 dB and 12 dB in Table 4-17.

15. Calculate each Corrected DVM Reading by algebraically subtracting offset recorded in step 2. Record results in Table 4-17.

16. Algebraically subtract corresponding Theoretical Reading from each Corrected DVM Reading, recording results in Table 4-17. Maximum value should not exceed ± 24 mV, corresponding to ± 3% of 800 mV Reference Level. Divide maximum value by 8 to calculate Percent Linear Error.

_____ % of Reference Level Linear Error

TABLE 4-17. AMPLITUDE LINEAR DISPLAY ACCURACY

Attenuator Setting (dB)	DVM Reading (mV)	Corrected DVM Reading* (mV)	Theoretical Reading (mV)	Theoretical Reading Subtracted From Corrected DVM Reading (mV)
0	_____	+800 (Ref.)	+800	0
6		_____	+401	_____
12	_____	_____	+201	_____

*DVM Reading minus offset recorded in step 2.

TABLE 4-18. PERFORMANCE TEST RECORD (1 OF 4)

Hewlett-Packard Company
Model 8559A
Spectrum Analyzer .01 – 21 GHz

Tested by _____

Serial No. _____ Date _____

Para. No.	Test Description	Results		
		Min	Actual	Max
4-11.	Frequency Span Accuracy			
	3. 200 MHz FREQSPAN/DIV	–0.4 div	_____	+0.4 div
	4. 100 MHz FREQSPAN/DIV	–0.4 div	_____	+0.4 div
	5. 50 MHz FREQSPAN/DIV	–0.4 div	_____	+0.4 div
	6. 20 MHz FREQSPAN/DIV	–0.4 div	_____	+0.4 div
	7. 10 MHz FREQSPAN/DIV	–0.4 div	_____	+0.4 div
	8. 5 MHz FREQSPAN/DIV	–0.4 div	_____	+0.4 div
	9. 2 MHz FREQSPAN/DIV	–0.4 div	_____	+0.4 div
	10. 1 MHz FREQSPAN/DIV	–0.4 div	_____	+0.4 div
	11. 500 kHz FREQSPAN/DIV	–0.4 div	_____	+0.4 div
	14. 200 kHz FREQSPAN/DIV	–0.4 div	_____	+0.4 div
	15. 100 kHz FREQSPAN/DIV	–0.4 div	_____	+0.4 div
	50 kHz FREQSPAN/DIV	–0.4 div	_____	+0.4 div
	20 kHz FREQSPAN/DIV	–0.4 div	_____	+0.4 div
	10 kHz FREQSPAN/DIV	–0.4 div	_____	+0.4 div
4-12.	Tuning Accuracy			
	5. .01 GHz	0.009 GHz	_____	0.011 GHz
	6. 1.5 GHz	1.494 GHz	_____	1.506 GHz
	8. 3.0 GHz	2.990 GHz	_____	3.010 GHz
	9. 6.1 GHz	6.083 GHz	_____	6.117 GHz
	7.5 GHz	7.480 GHz	_____	7.520 GHz
	9.0 GHz	8.977 GHz	_____	9.023 GHz
	3.1 GHz	3.089 GHz	_____	3.110 GHz
	6.0 GHz	5.983 GHz	_____	6.017 GHz
	9.0 GHz	8.977 GHz	_____	9.023 GHz
	9.1 GHz	9.077 GHz	_____	9.123 GHz
	12.0 GHz	11.971 GHz	_____	12.029 GHz
	15.0 GHz	14.965 GHz	_____	15.035 GHz
	6.1 GHz	6.083 GHz	_____	6.117 GHz
	10.5 GHz	10.474 GHz	_____	10.526 GHz
	15.0 GHz	14.965 GHz	_____	15.035 GHz
	12.1 GHz	12.071 GHz	_____	12.129 GHz
	17.0 GHz	16.961 GHz	_____	17.039 GHz
	21.0 GHz	20.953 GHz	_____	21.047 GHz

TABLE 4-18. PERFORMANCE TEST RECORD (2 OF 4)

Para. No.	Test Description	Results		
		Min	Actual	Max
4.13.	Residual FM			
	6. Peak-to-Peak Variation of Trace		_____	1.4 div (2 kHz/0.1 sec)
4-14.	Noise Sidebands			
	6. Noise Sidebands		_____	7.0 div down (−70 dB)
4-15.	Resolution Bandwidth Accuracy			
	7. 3 MHz Resolution BW	2.10 MHz	_____	3.90 MHz
	8. 3 MHz Resolution BW (ALT IF)	2.10 MHz	_____	3.90 MHz
	9. 1 MHz Resolution BW	850 kHz	_____	1150 kHz
	10. 300 kHz Resolution BW	255 kHz	_____	345 kHz
	11. 100 kHz Resolution BW	85 kHz	_____	115 kHz
	17. 30 kHz Resolution BW	25.5 kHz	_____	34.5 kHz
	18. 10 kHz Resolution BW	8.5 kHz	_____	11.5 kHz
	19. 3 kHz Resolution BW	2.55 kHz	_____	3.45 kHz
	20. 1 kHz Resolution BW	0.85 kHz	_____	1.15 kHz
4-16.	Resolution Bandwidth Selectivity			
	24. 3 MHz Resolution BW Selectivity		_____	15:1
	3 MHz Resolution BW Selectivity (ALT IF)		_____	15:1
	1 MHz Resolution BW Selectivity		_____	15:1
	300 kHz Resolution BW Selectivity		_____	15:1
	100 kHz Resolution BW Selectivity		_____	15:1
	30 kHz Resolution BW Selectivity		_____	15:1
	10 kHz Resolution BW Selectivity		_____	15:1
	3 kHz Resolution BW Selectivity		_____	15:1
	1 kHz Resolution BW Selectivity		_____	15:1
4-17.	Average Noise Level			
	5. Average Noise Level, .01–3 GHz		_____	−111 dBm
	6. Average Noise Level, 6–9 GHz		_____	−108 dBm
	7. Average Noise Level, 3–9 GHz		_____	−103 dBm
	8. Average Noise Level, 9–15 GHz		_____	−98 dBm
	9. Average Noise Level, 6–15 GHz		_____	−93 dBm
	10. Average Noise Level, 12.1–18 GHz		_____	−92 dBm
	11. Average Noise Level, 18–21 GHz		_____	−90 dBm

TABLE 4-18. PERFORMANCE TEST RECORD (3 OF 4)

Para. No.	Test Description	Results		
		Min.	Actual	Max.
4-18.	Residual Responses			
	6. Residual Response, 0.1 GHz to 3 GHz		_____	–90 dBm
	7. Residual Response, 0.1 GHz to 3 GHz (ALT IF)		_____	–90 dBm
4-19.	Frequency Response			
	15. Frequency Response, 0.1 to 3.0 GHz		_____	±1.0 dB
	18. Frequency Response, 6.0 to 9.0 GHz		_____	±1.0 dB
	20. Frequency Response, 3.0 to 9.0 GHz		_____	±1.5 dB
	22. Frequency Response, 9.0 to 15.0 GHz		_____	±1.8 dB
	24. Frequency Response, 6.0 to 15.0 GHz		_____	±2.1 dB
	26. Frequency Response, 12.1 to 18.0 GHz		_____	±2.3 dB
	32. Frequency Response, 18.0 to 21.0 GHz		_____	±3.0 dB
4-20.	Gain Compression			
	11. Gain Compression		_____	0.5 dB
4-21.	Bandwidth Switching (Amplitude Variation)			
	6. 3 MHz to 300 kHz (overall variation)	–0.5 dB	_____	+0.5 dB
	3 MHz to 1 kHz (overall variation)	–1.0 dB	_____	+1.0 dB
4-22.	Input Attenuator Accuracy			
	5. Maximum Error per 10-dB step (0 dB–60 dB)	–1.0 dB	_____	+1.0 dB
	6. Maximum Cumulative Step Error (0 dB–60 dB)		_____	+2.4 dB
4-23.	Reference Level Variation			
	4. Reference Level Error in Log (–10 dBm to –80 dBm)	–0.5 dB	_____	+0.5 dB
	Reference Level Error in Log (–10 dBm to –100 dBm)	–1.0 dB	_____	+1.0 dB
	8. Reference Level Error in LIN (–10 dBm to –80 dBm)	–0.5 dB	_____	+0.5 dB
	Reference Level Error in LIN (–10 dBm to –100 dBm)	–1.0 dB	_____	+1.0 dB
	11. Vernier Error	–0.5 dB	_____	+0.5 dB

TABLE 4-18. PERFORMANCE TEST RECORD (4 OF 4)

Para. No.	Test Description	Results		
		Min.	Actual	Max.
4-24.	Sweep Time Accuracy			
	7. Sweep Time, 2 μsec/div	1.80 psec	_____	2.20 psec
	8. Sweep Time, 5 μsec/div	4.50 psec	_____	5.50 psec
	Sweep Time, 10 μsec/div	9.00 psec	_____	11.00 psec
	Sweep Time, 20 μsec/div	18.00 psec	_____	22.00 psec
	Sweep Time, 50 μsec/div	45.00 psec	_____	55.00 psec
	Sweep Time, .1 msec/div	90.00 psec	_____	110 psec
	Sweep Time, .2 msec/div	180 psec	_____	220 psec
	Sweep Time, .5 msec/div	450 psec	_____	550 psec
	Sweep Time, 1 msec/div	900 psec	_____	1100 psec
	Sweep Time, 2 msec/div	1800 psec	_____	2200 psec
	Sweep Time, 5 msec/div	4500 psec	_____	5500 psec
	Sweep Time, 10 msec/div	9.00 msec	_____	11.00 msec
	12. Sweep Time, 20 msec/div	0.180 sec	_____	0.220 sec
	Sweep Time, 50 msec/div	0.450 sec	_____	0.550 sec
	Sweep Time, .1 sec/div	0.90 sec	_____	1.10 sec
	Sweep Time, .2 sec/div	1.80 sec	_____	2.20 sec
	Sweep Time, .5 sec/div	4.50 sec	_____	5.50 sec
	Sweep Time, 1 sec/div	9.0 sec	_____	11 sec
	Sweep Time, 5 sec/div	40.0 sec	_____	60 sec
	Sweep Time, 10 sec/div	80.0 sec	_____	120 sec
4-25.	Calibrator Output Accuracy			
	1. Calibrator Output Frequency	34.600 MHz	_____	35.400 MHz
	2. Calibrator Output Power (50Ω)	−10.3 dBm	_____	−9.7 dBm
4-26.	Display Fidelity			
	9. Log Maximum Cumulative Error	−1.5 dB	_____	+1.5 dB
	10. Log Incremental Error	−0.1 dB/dB	_____	+0.1 dB/dB
	16. Percent Linear Error (Percent of Reference Level)		_____	3%

SECTION V
ADJUSTMENTS

5-1. INTRODUCTION

5-2. This section describes the adjustments used to restore the HP 8559A to its peak operating condition after a repair or to compensate for changes resulting from component aging. Illustrations showing the appropriate test setups are included in the adjustment procedures. Table 5-1 lists all the adjustments by adjustment name, adjustment reference designator, and by the paragraph number of the adjustment procedure. Included in the table is a brief description of the purpose of the adjustment.

5-3. Data taken during an adjustment should be recorded in the spaces provided in the procedure. Comparison of initial data with data taken during later adjustments is useful for preventative maintenance and troubleshooting.

WARNING

The adjustments in this section require the HP **8559A** to be removed from the display mainframe and connected through an extender cable assembly. Be very careful; the energy at some points in the instrument will, if contacted, cause personal injury. The adjustments in this section should be performed only by a skilled person who knows the hazard involved.

NOTE

Before performing any adjustments, allow 1 hour **warmup** time, unless **otherwise** noted.

5-4. EQUIPMENT REQUIRED

5-5. Test equipment and accessories required for the adjustment procedures are listed in Table 1-3. If the listed equipment is not available, substitute equipment may be used provided it meets the minimum specifications given in the table.

5-6. Adjustment Tools

5-7. Required service accessories, with part numbers, are illustrated in Section II.

5-8. For adjustments that require a non-metallic tuning tool, use fiber tuning tool, HP Part Number 8710-0033 (check digit 4). When a non-metallic tuning tool is not required, you may use an ordinary small, flat-bladed screwdriver or other suitable tool. Regardless of the tool used, do not try to force any adjustment control. Slug-tuning inductors and variable capacitors, especially, are easily damaged by excessive force.

5-9. Extender Cable Installation

WARNING

Disconnect display mainframe line power cord before installation of extender cable assembly.

5-10. Pull out the lock knob and slide the spectrum analyzer out of the display mainframe. If sidestops are installed, refer to Section II for removal.

5-11. Carefully slide the extender cable assembly, HP Part Number 5060-0303, into the display mainframe, aligning the metal guide plate with the slotted side rails of the mainframe. Firmly seat the extender cable assembly to ensure good contact.

5-12. Connect the opposite end of the cable to the spectrum analyzer. The plug is keyed so it will go on correctly and will not make contact upside down. Remove the orange and the yellow leads from pins 3 and 4 on the A15 board at the rear of the spectrum analyzer. Connect the corresponding leads from the extender cable assembly to these pins by means of the insulated alligator clips.

5-13. RELATED ADJUSTMENTS

5-14. These adjustments should be performed when the troubleshooting information in Section VIII indicates that an adjustable circuit is not operating correctly. Perform the adjustments after repair or replacement of the circuit. The troubleshooting procedures and Table 5-2 specify the required adjustments.

5-15. FACTORY SELECTED COMPONENTS

5-16. Table 5-3 is a list of factory selected components used in the HP 8559A. The components are listed by reference designator, related adjustment paragraph, and by basis of selection. Factory selected components are identified by an asterisk (*) in the schematic diagrams in Section VIII and in the Replaceable Parts list in Section VIII. Part numbers for standard values of selected components are listed in Table 5-4.

TABLE 5-1. ADJUSTABLE COMPONENTS (1 OF 3)

Adjustment Name	Reference Designator	Adjustment Paragraph	Description
GAIN	A1A2R28	5-30	Adjusts DPM high indication.
OFFSET	A1A2R29	5-30	Adjusts DPM low indication.
2nd MIXER MATCH	A5L2	5-26	Adjusts Second Converter output match.
Z1	A5Z1	5-26	Adjusts First IF Bandpass Filter Response.
Z2	A5Z2	5-26	Adjusts First IF Bandpass Filter Response.
Z3	A5Z3	5-26	Adjusts First IF Bandpass Filter Response.
2nd LO FREQUENCY	A5Z4	5-26	Adjusts Second LO Frequency.
3 GHz	A7R8	5-25	Adjusts YTO low-end frequency.
– lov	A7R29	5-17	Adjusts –lOV Power Supply output.
+14.5V	A7R41	5-17	Adjusts +14.5V Power Supply output.
6 GHz C	A7R47	5-25	Coarse adjusts YTO high-end frequency.
6 GHz F	A7R75	5-25	Fine adjusts YTO high-end frequency.
MO	A7R81	5-25	Adjusted to optimize centering between wide and narrow frequency spans.
DC	A7R83	5-25	Adusts delay compensation.
FM	A7R92	5-25	Adjusts YTO linearity.
REG	A8R34	5-26	Adjusts varactor bias voltage for proper Second LO Shift between Regular and Alternate IF.
OFF	A8R39	5-26	Adjusts varactor bias voltage (offset) for Second LO frequency with Regular IF.
SIG ID	A8R40	5-26	Adjusts Second LO shift for signal identifier 1 MHz below signal.
DPM ZERO	A8R61	5-30	Adjusts DPM Driver output for OV with OV input (offset adjustment).
VO	A8R62	5-17	Adjusts varactor bias voltage (offset) with Alternate IF.
+10V	A9R2	5-17	Adjusts +10V Power Supply output.
1 ms	A9R10	5-18	Adjusts sweep ramp to calibrate 1ms/DIV sweep time
5 ms	A9R13	5-18	Adjusts sweep ramp to calibrate 5ms/DIV sweep time
XTL	A9R72	5-21, 5-22	Adjusts 3kHz IF bandwidth.
LC	A9R85	5-21, 5-22	Adjusts 1MHz IF bandwidth.
C9	A10C9	5-27	Adjusts Second IF Bandpass Filter Response.
C10	A10C10	5-27	Adjusts Second IF Bandpass Filter Response.
C11	A10C11	5-27	Adjusts Second IF Bandpass Filter Response.
C12	A10C12	5-27	Adjusts Second IF Bandpass Filter Response.
CAL FREQ	A10C46	5-29	Adjusts CAL OUTPUT frequency.
LO ADJ	A10L12	5-27	Adjusts Third LO frequency.
CAL AMPL	A10R13	5-29	Adjusts CAL OUTPUT amplitude.
SYM	A11C15	5-21	Adjusts symmetry of first crystal bandwidth filter stage.
LC CTR	A11C23	5-21	Adjusts centering of first LC bandwidth filter stage.
CTR	A11C25	5-21	Adjusts centering of first crystal bandwidth filter stage

TABLE 5-1. ADJUSTABLE COMPONENTS (2 OF 3)

Adjustment Name	Reference Designator	Adjustment Paragraph	Description
SYM	A11C38	5-21	Adjusts symmetry of second crystal bandwidth filter stage.
LC CTR	A11C45	5-21	Adjusts centering of second LC bandwidth filter stage
CTR	A11C54	5-21	Adjusts centering of second crystal bandwidth filter stage.
C73(LC DIP)	A11C73	5-21	Dip adjusts first LC bandwidth filter stage.
C74(LC DIP)	A11C74	5-21	Dip adjusts second LC bandwidth filter stage.
LC	A11R26	5-21	Adjusts LC feedback of bandwidth filter.
XTL	A11R31	5-21	Adjusts crystal feedback of bandwidth filter.
RF GAIN	A12R5	5-23	Adjusts overall gain of step gain amplifiers.
10D (10 dB)	A12R6	5-24	Adjusts 10 dB step gain amplifier.
20D (20 dB)	A12R21	5-24	Adjusts first 20 dB step gain amplifier.
40D (40 dB)	A12R29	5-24	Adjusts second 20 dB step gain amplifier.
LC CTR	A13C23	5-21	Adjusts centering of first LC bandwidth filter stage.
CTR	A13C25	5-21	Adjusts centering of first crystal bandwidth filter stage.
SYM	A13C38	5-21	Adjusts symmetry of second crystal bandwidth filter stage.
LC CTR	A13C45	5-21	Adjusts centering of second LC bandwidth filter stage
CTR	A13C54	5-21	Adjusts centering of second crystal bandwidth filter stage.
C73(LC DIP)	A13C73	5-21	Dip adjusts first LC bandwidth filter stage.
C74(LC DIP)	A13C74	5-21	Dip adjusts second LC bandwidth filter stage.
LC	A13R26	5-21	Adjusts LC feedback of bandwidth filter.
XTL	A13R31	5-21	Adjusts crystal feedback of bandwidth filter.
OFFSET	A14R10	5-19	Adjusts −8V temperature compensated supply.
TC	A14R21		Adjusts gain of +1V supply to provide temperature compensation for log mode temperature controlled variable gain amplifier. (Factory adjustable only.)
SLOPE	A14R23	5-19	Adjusts gain of log mode temperature controlled gain amplifier.
G6	A14R27	5-19	Adjusts combined gain of 2nd and 3rd stages in linear mode.
G5	A14R30	5-19	Adjusts gain of 4th stage in linear mode.
G4	A14R33	5-19	Adjusts gain of 5th stage in linear mode.
LIN	A14R34	5-19	Adjusts combined gain of 6th and 7th stages in linear mode.
−10 dB	A14R39	5-19	Adjusts shape of log fidelity curve at −10 dB.
−30 dB	A14R69	5-19	Adjusts shape of log fidelity curve at −30 dB.
1 VT	A14R88		Adjusts voltage at A14TP1 for approximately +1V. (Factory adjustable only.)

TABLE 5-1. ADJUSTABLE COMPONENTS (3 OF 3)

Adjustment Name	Reference Designator	Adjustment Paragraph	Description
LOG GAIN	A14R121	5-19	Adjusts dc offset circuitry at output of Log Amplifier Assembly A14 for 10 dB steps in log mode.
1 dB (offset)	A15R1	5-20	Adjusts LOG 10 dB/DIV translation.
OD (0 dB)	A12R35	5-24	Adjusts variable gain amplifier for 0 dB with REF LEVEL FINE control set to 0 dB.
–12D (–12 dB)	A12R39	5-24	Adjusts variable gain amplifier for –12 dB with REF LEVEL FINE control set to –12 dB.
1B	A12R47	5-28	Adjusts slope of Band 1 response.
2B	A12R48	5-28	Adjusts slope of Band 2 response.
3B	A12R49	5-28	Adjusts slope of Band 3 response.
4B	A12R51	5-28	Adjusts slope of Band 4 response.
5B	A12R53	5-28	Adjusts slope of Band 5 response.
5C	A12R54	5-28	Adjusts high-end breakpoint in slope of Band 5 response.
6B	A12R55	5-28	Adjusts slope of Band 6 response.
6C	A12R56	5-28	Adjusts high-end breakpoint in slope of Band 6 response.
1A	A12R57	5-28	Adjusts gain of Band 1.
2A	A12R58	5-28	Adjusts gain of Band 2.
3A	A12R59	5-28	Adjusts gain of Band 3.
4A	A12R60	5-28	Adjusts gain of Band 4.
5A	A12R61	5-28	Adjusts gain of Band 5.
6A	A12R62	5-28	Adjusts gain of Band 6.
v3+	A12R70	5-28	Adjusts diode bias for Band 6.
v 3–	A12R71	5-28	Adjusts diode bias for Band 5.
V1	A12R72	5-28	Adjusts diode bias for Bands 1 and 2.
v 2–	A12R83	5-28	Adjusts diode bias for Band 3.
v2+	A12R87	5-28	Adjusts diode bias for Band 4.
SYM	A13C15	5-21	Adjusts symmetry of first crystal bandwidth filter stage.

TABLE 5-2. RELATED ADJUSTMENTS

Assembly Replaced or Repaired		Perform the Following Related Adjustments	Paragraph Number
A1A1	DPM Display	Frequency Display Adjustments	5-30
A1A2	DPM Driver	Frequency Display Adjustments	5-30
A2	Front Panel Switch Assembly	First Converter Adjustments	5-25
		CAL OUTPUT and REF LEVEL CAL Adjustments	5-29
A3	Input Attenuator	Frequency Response Adjustments	5-28
A4	First Mixer	First Converter Adjustments	5-25
		Frequency Response Adjustments	5-28
		CAL OUTPUT and REF LEVEL CAL Adjustments	5-29
A5	Second Converter	Second Converter Adjustments	5-26
		CAL OUTPUT and REF LEVEL CAL Adjustments	5-29
A6	YIG-Tuned Oscillator	First Converter Adjustments	5-25
		Frequency Response Adjustments	5-28
		CAL OUTPUT and REF LEVEL CAL Adjustments	5-29
A7	Frequency Control	Power Supply Checks and Adjustments	5-17
		First Converter Adjustments	5-25
A8	Marker	First Converter Adjustments	5-25
A9	Sweep Generator/ Bandwidth Control	Power Supply Checks and Adjustments	5-17
		Calibrated Sweep Time Adjustments	5-18
		3-dB Bandwidth Adjustments	5-22
A10	Third Converter	Third Converter Adjustments	5-27
		CAL OUTPUT and REF LEVEL CAL Adjustments	5-29
A11, A13*	Bandwidth Filters	Bandwidth Filter Adjustments	5-21
		3-dB Bandwidth Adjustments	5-22
A12	Step Gain	RF Gain Adjustments	5-23
		Step Gain Adjustments	5-24
		CAL OUTPUT and REF LEVEL CAL Adjustments	5-29
A14	Log Amplifier	Log Amplifier Log and Linear Adjustments	5-19
		1-dB Offset Adjustment	5-20
		CAL OUTPUT and REF LEVEL CAL Adjustments	5-29
A15	Vertical Driver/ Blanking	1-dB Offset Adjustment	5-20
A16	Motherboard	No related adjustments	

*A11 and A13 bandwidth filter assemblies contain a matched set of crystals. These two assemblies must be treated as a matched pair when replacement is necessary.

TABLE 5-3. FACTORY SELECTED COMPONENTS IN ALPHA-NUMERICAL ORDER

Reference Designator	Basis of Selection
A1A2R1	Adjusts bias on DPM Clock Oscillator.
A7C12	Selected to provide delay compensation for main coil sweeps.
A7R59	Adjusts YTO sweep linearity.
A7R60	Adjusts YTO sweep linearity.
A7R96	Selected to provide delay compensation for FM coil swept spans.
A7R106	Selected to optimize Main Coil Span Accuracy.
A7R107	Selected to optimize Main Coil Span Accuracy.
A8R94	Shifts adjustment range of A8R34 REG.
A9R42	Selected to set low end of sweep ramp.
A9R47	Selected to set high end of sweep ramp.
A9R109	Selected to optimize 1 kHz Bandwidth.
A9R110	Selected to optimize 3 kHz Bandwidth.
A9R111	Selected to optimize 10 kHz Bandwidth.
A9R116	Selected to optimize 300 kHz Bandwidth.
A9R118	Selected to optimize 1 MHz Bandwidth.
A9R120	Selected to optimize 3 MHz Bandwidth.
A10R25	Adjusts gain of Flatness Compensation Amplifier to compensate for gain of A12 flatness circuitry.
A11C16	Selected to shift adjustment range of A11C23. Should be same value as A11C20.
A11C20	Selected to shift adjustment range of A11C23. Should be same value as A11C16.
A11C43	Selected to shift adjustment range of A11C45. Should be same value as A11C64.
A11C64	Selected to shift adjustment range of A11C45. Should be same value as A11C43.
A11R7	Adjusts XTAL bandwidth amplitudes relative to LC amplitudes.
A11R19	Selected to give correct IF bandwidth for RESOLUTION BW of 100 kHz.
A11R23	Selected to give correct IF bandwidth for RESOLUTION BW of 30 kHz.
A11R32	Selected to shift adjustment range of A11R26.
A11R43	Selected to give correct IF bandwidth for RESOLUTION BW of 100 kHz.
A11R48	Selected to give correct IF bandwidth for RESOLUTION BW of 30 kHz.
A11R56	Selected to equalize feedback between LC stages (not field selectable).
A12C26	Selected to optimize 3 MHz to 1 MHz bandwidth amplitude and frequency correlation.
A12R50	Adjusts Band 3 breakpoint for frequency response.
A12R73	Shifts adjustment range of A12R72 V1.
A12R74	Shifts adjustment range of A12R71 V3–.
A12R75	Shifts adjustment range of A12R70 V3+.
A12R80	Adjusts reference voltage to A12U2 for diode bias.
A12R84	Shifts adjustment range of A12R83 V2–.
A12R88	Shifts adjustment range of A12R87 V2+.
A13C16	Selected to shift adjustment range of A13C23. Should be same value as A13C20.
A13C20	Selected to shift adjustment range of A13C23. Should be same value as A13C16.
A13C43	Selected to shift adjustment range of A13C45. Should be same value as A13C64.
A13C64	Selected to shift adjustment range of A13C45. Should be same value as A13C43.
A13R7	Adjusts XTAL bandwidth amplitudes relative to LC amplitutles.
A13R19	Selected to give correct IF bandwidth for RESOLUTION BW of 100 kHz.
A13R23	Selected to give correct IF bandwidth for RESOLUTION BW of 30 kHz.
A13R32	Selected to shift adjustment range of A13R26.
A13R43	Selected to give correct IF bandwidth for RESOLUTION BW of 100 kHz.
A13R48	Selected to give correct IF bandwidth for RESOLUTION BW of 30 kHz.
A13R56	Selected to equalize feedback between LC stages (not field selectable).
A14R93	Selected to shift adjustment range of A11R34.
A14R101	Selected to shift adjustment range of A11R34.
A14R107	Selected to shift adjustment range of A11R23.
A15R26	Selected to provide increased range adjustment for 1 dB offset circuit.

TABLE 5-4. HP PART NUMBERS OF STANDARD VALUE REPLACEMENT COMPONENTS (1 OF 3)

CAPACITORS

RANGE: 1 to 24 pF
TYPE: Tubular
TOLERANCE:
1 to 9.1 pF = ±.25 pF
10 to 24 pF = ±5%

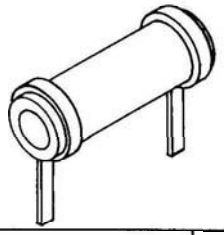

RANGE: 27 to 680 pF
TYPE: Dipped Mica
TOLERANCE: ±5%

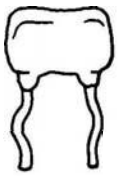

Value (pF)	HP Part Number	C D
1.0	0160-2236	8
1.2	0160-2237	9
1.5	0150-0091	8
1.8	0160-2239	1
2.0	0160-2240	4
2.2	0160-2241	5
2.4	0160-2242	6
2.7	0160-2243	7
3.0	0160-2244	8
3.3	0150-0059	8
3.6	0160-2246	0
3.9	0160-2247	1
4.3	0160-2248	2
4.7	0160-2249	3
5.1	0160-2250	6
5.6	0160-2251	7
6.2	0160-2252	8
6.8	0160-2253	9
7.5	0160-2254	0
8.2	0160-2255	1
9.1	01o0-2256	2
10.0	0160-2257	3
11.0	0160-2258	4
12.0	0160-2259	5
13.0	0160-2260	8
15.0	0160-2261	9
16.0	0160-2262	0
18.0	0160-2263	1
20.0	0160-2264	2
22.0	0160-2265	3
24.0	0160-2266	4

Value (pF)	HP Part Number	C D
27	0160-2306	3
30	0160-2199	2
33	0160-2150	5
36	0160-2308	5
39	0140-0190	7
43	0160-2200	6
47	0160-2307	4
51	0160-2201	7
56	0140-0191	8
62	0140-0205	5
68	0140-0192	9
75	0160-2202	8
82	0140-0193	0
91	0160-2203	9
100	0160-2204	0
110	0140-0194	1
120	0160-2205	1
130	0140-0195	2
150	0140-0196	3
160	0160-2206	2
180	0140-0197	4
200	0140-0198	5
220	0160-0134	1
240	0140-0199	6
270	0140-0210	2
300	0160-2207	3
330	0160-2208	4
360	0160-2209	5
390	0140-0200	0
430	0160-0939	4
470	0160-3533	0
510	0160-3534	1
560	0160-3535	2
620	0160-3536	3
680	0160-3537	4

TABLE 5-4. HP PART NUMBERS OF STANDARD VALUE REPLACEMENT COMPONENTS (2 OF 3)

RESISTORS

RANGE: 10 to 464K Ohms
TYPE: Fixed-Film
WATTAGE: .125 at 125°C
TOLERANCE: ±1.0%

Value (Ω)	HP Part Number	CD	Value (Ω)	HP Part Number	CD	Value (Ω)	HP Part Number	CD
10.0	0757-0346	2	464	0698-0082	7	21.5K	0757-0199	3
11.0	0757-0378	0	511	0757-0416	7	23.7K	0698-3158	4
12.1	0757-0379	1	562	0757-0417	8	26.1K	0698-3159	5
13.3	0698-3427	0	619	0757-0418	9	28.7K	0698-3449	6
14.7	0698-3428	1	681	0757-0419	0	31.6K	0698-3160	8
16.2	0757-0382	6	750	0757-0420	3	34.8K	0757-0123	3
17.8	0757-0294	9	825	0757-0421	4	38.3K	0698-3161	9
19.6	0698-3429	2	909	0757-0422	5	42.2K	0698-3450	9
21.5	0698-3430	5	1.0K	0757-0280	3	46.4K	0698-3162	0
23.7	0698-3431	6	1.1K	0757-0424	7	51.1K	0757-0458	7
26.1	0698-3432	7	1.21K	0757-0274	5	56.2K	0757-0459	8
28.7	0698-3433	8	1.33K	0757-0317	7	61.9K	0757-0460	1
31.6	0757-0180	2	1.47K	0757-1094	9	68.1K	0757-0461	2
34.8	0698-3434	9	1.62K	0757-0428	1	75.0K	0757-0462	3
38.3	0698-3435	0	1.78K	0757-0278	9	82.5K	0757-0463	4
42.2	0757-0316	6	1.96K	0698-0083	8	90.9K	0757-0464	5
46.4	0698-4037	0	2.15K	0698-0084	9	100K	0757-0465	6
51.1	0757-0394	0	2.37K	0698-3150	6	110K	0757-0466	7
56.2	0757-0395	1	2.61K	0698-0085	0	121K	0757-0467	8
61.9	0757-0276	7	2.87K	0698-3151	7	133K	0698-3451	0
68.1	0757-0397	3	3.16K	0757-0279	0	147K	0698-3452	1
75.0	0757-0398	4	3.48K	0698-3152	8	162K	0757-0470	3
82.5	0757-0399	5	3.83K	0698-3153	9	178K	0698-3243	8
90.9	0757-0400	9	4.22K	0698-3154	0	196K	0698-3453	2
100	0757-0401	0	4.64K	0698-3155	1	215K	0698-3454	3
110	0757-0402	1	5.11K	0757-0438	3	237K	0698-3266	5
121	0757-0403	2	5.62K	0757-0200	7	261K	0698-3455	4
133	0698-3437	2	6.19K	0757-0290	5	287K	0698-3456	5
147	0698-3438	3	6.81K	0757-0439	4	316K	0698-3457	6
162	0757-0405	4	7.50K	0757-0440	7	348K	0698-3458	7
178	0698-3439	4	8.25K	0757-0441	8	383K	0698-3459	8
196	0698-3440	7	9.09K	0757-0288	1	422K	0698-3460	1
215	0698-3441	8	10.0K	0757-0442	9	464K	0698-3260	9
237	0698-3442	9	11.0K	0757-0443	0			
261	0698-3132	4	12.1K	0757-0444	1			
287	0698-3443	0	13.3K	0757-0289	2			
316	0698-3444	1	14.7K	0698-3156	2			
348	0698-3445	2	16.2K	0757-0447	4			
383	0698-3446	3	17.8K	0698-3136	8			
422	0698-3447	4	19.6K	0698-3157	3			

TABLE 5-4. HP PART NUMBERS OF STANDARD VALUE REPLACEMENT COMPONENTS (3 OF 3)

RESISTORS

RANSE: 10 to 1.47M Ohms
TYPE: Fixed-Film
WATTAGE: .5 at 125°C
TOLERANCE: ±1%

Value (Ω)	HP Part Number	C D	Value (Ω)	HP Part Number	C D	Value (Ω)	HP Part Number	C D	Value (Ω)	HP Part Number	C D
10.0	0757-0984	4	215	0698-3401	0	4.64K	0698-3348	4	110K	0757-0859	2
11.0	0575-0985	5	237	0698-3102	8	5.11K	0757-0833	2	121K	0757-0860	5
12.1	0757-0986	6	261	0757-1090	5	5.62K	0757-0834	3	133K	0757-0310	0
13.3	0757-0001	6	287	0757-1092	7	6.19K	0757-0196	0	147K	0698-3175	5
14.7	0698-3388	2	316	0698-3402	1	6.81K	0757-0835	4	162K	0757-0130	2
16.2	0757-0989	9	348	0698-3403	2	7.50K	0757-0836	5	178K	0757-0129	9
17.8	0698-3389	3	383	0698-3404	3	8.25K	0757-0837	6	196K	0757-0063	0
19.6	0698-3390	6	422	0698-3405	4	9.09K	0757-0838	7	215K	0757-0127	7
21.5	0698-3391	7	464	0698-0090	7	10.0K	0757-0839	8	237K	0698-3424	7
23.7	0698-3392	8	511	0757-0814	9	12.1K	0757-0841	2	261K	0757-0064	1
26.1	0757-0003	8	562	0757-0815	0	13.3K	0698-3413	4	287K	0757-0154	0
28.7	0698-3393	9	619	0757-0158	4	14.7K	0698-3414	5	316K	0698-3425	8
31.6	0698-3394	0	681	0757-0816	1	16.2K	0757-0844	5	348K	0757-0195	9
34.8	0698-3395	1	750	0757-0817	2	17.8K	0698-0025	8	383K	0757-0133	5
38.3	0698-3396	2	825	0757-0818	3	19.6K	0698-3415	6	422K	0757-0134	6
42.2	0698-3397	3	909	0757-0819	4	21.5K	0698-3416	7	464K	0698-3426	9
46.4	0698-3398	4	1.00K	0757-0159	5	23.7K	0698-3417	8	511K	0757-0135	7
51.1	0757-1000	7	1.10K	0757-0820	7	26.1K	0698-3418	9	562K	0757-0868	3
56.2	0757-1001	8	1.21K	0757-0821	8	28.7K	0698-3103	9	619K	0757-0136	8
61.9	0757-1002	9	1.33K	0698-3406	5	31.6K	0698-3419	0	681K	0757-0869	4
68.1	0757-0794	4	1.47K	0757-1078	9	34.8K	0698-3420	3	750K	0757-0137	9
75.0	0757-0795	5	1.62K	0757-0873	0	38.3K	0698-3421	4	825K	0757-0870	7
82.5	0757-0796	6	1.78K	0698-0089	4	42.2K	0698-3422	5	909K	0757-0138	0
90.0	0757-0797	7	1.96K	0698-3407	6	46.4K	0698-3423	6	1M	0757-0059	4
100	0757-0198	2	2.15K	0698-3408	7	51.1K	0757-0853	6	1.1M	0757-0139	1
110	0757-0798	8	2.37K	0698-3409	8	56.2K	0757-0854	7	1.21M	0757-0871	8
121	0757-0799	9	2.61K	0698-0024	7	61.9K	0757-0309	7	1.33M	0757-0194	8
133	0698-3399	5	2.87K	0698-3101	7	68.1K	0757-0855	8	1.47M	0698-3464	5
147	0698-3400	9	3.16K	0698-3410	1	75.OK	0757-0856	9			
162	0757-0802	5	3.48K	0698-3411	2	82.5K	0757-0857	0			
178	0698-3334	8	3.83K	0698-3412	3	90.9K	0757-0858	1			
196	0757-1060	9	4.22K	0698-3346	2	1COK	0757-0367	7			

ADJUSTMENTS

5-17. POWER SUPPLY CHECKS AND ADJUSTMENTS

REFERENCE:

A7, A8, A9 Schematics

DESCRIPTION:

The +14.5V and −10V regulated power supplies on Frequency Control Assembly A7 are adjusted. The (dependent) −12V power supply is then checked for proper dc output (with less than ±50 mV variation) while the spectrum analyzer is tuned from 10 MHz to 3 GHz. The +10V power supply on Sweep Generator/Bandwidth Control Assembly A9 and the VO (Varactor Offset) voltage on Marker Assembly A8 are then adjusted. Both the +10V power supply voltage and the VO voltage are temperature-dependent and must be adjusted during the first five minutes after the spectrum analyzer is turned on (cold instrument).

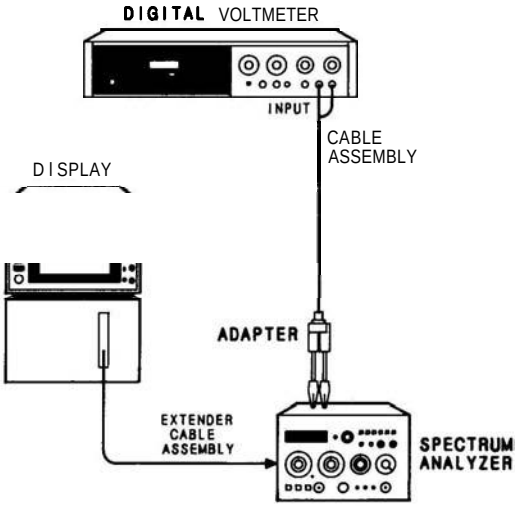

FIGURE 5-1. POWER SUPPLY CHECKS AND ADJUSTMENTS TEST SETUP

EQUIPMENT:

Digital Voltmeter	HP 3456A
Extender Cable	HP 5060-0303
Cable Assembly, BNC (m) to Banana Plug	HP 11001A
Adapter, BNC (f) to Alligator Clips	HP 8120-1292

ADJUSTMENTS

5-17. POWER SUPPLY CHECKS AND ADJUSTMENTS (Cont'd)

PROCEDURE:

1. Set spectrum analyzer controls as follows:

FREQUENCY BAND GHz	.01 – 3
TUNING	0.010 GHz
FREQ SPAN/DIV	F (full)
RESOLUTION BW	Optimum, coupled
INPUT ATTEN	10 dB
REFERENCE LEVEL	0 dBm
REF LEVEL FINE	0
Amplitude Scale	10 dB/DIV
SWEEP TIME/DIV	MAN
SWEEP TRIGGER	FREE RUN
ALT IF	OFF
SIG IDENT	OFF
BL CLIP	OFF
VIDEO FILTER	OFF

NOTE

In all following adjustments, connect negative terminal of digital voltmeter to spectrum analyzer chassis unless otherwise instructed.

2. Connect equipment as shown in Figure 5-1. Install Frequency Control Assembly A7 on extender board and connect digital voltmeter to +14.5V test points A7TP3.

3. Adjust +14.5V potentiometer A7R41 for a voltmeter indication of +14.500 ± 0.002 Vdc.

4. Connect digital voltmeter to –10V test point A7TP2 and adjust –10V potentiometer A7R29 for a voltmeter indication of –10.000 ± 0.005 Vdc.

5. Use digital voltmeter to check for –12.0 ± 0.1 Vdc at collector (case) of transistor A7Q7, located near center of Frequency Control Assembly A7. Vary MAN SWEEP control over entire range and verify that voltage indication varies no more than ± 0.05 Vdc.

6. Remove extender board and reinstall Frequency Control Assembly A7.

ADJUSTMENTS

5-17. POWER SUPPLY CHECKS AND ADJUSTMENTS (Cont'd)

NOTE

The two following voltage adjustments, +10V and VO (Varactor Offset), must be performed while the spectrum analyzer is still cold (during first five minutes after turn-on). If the instrument has been operating longer than five minutes, turn off the display mainframe, remove A8 and A9 assemblies, and let them cool on bench for 15 minutes. Replace the two assemblies and proceed with adjustment of **A9R2** and **A8R62** during the first five minutes after turn-on.

7. Connect digital voltmeter to +10V test point A9TP7 and adjust +10V potentiometer A9R2 for a voltmeter indication of +10.000 ±0.100 Vdc.

8. Connect digital voltmeter to VO test point A8TP2. Set spectrum analyzer SWEEP TIME/DIV control to 10 ms and SWEEP TRIGGER control to SINGLE. Turn ALT IF and SIG IDENT on (pushbuttons depressed).

9. Voltage at A8TP2 will alternate between two values each time a sweep is triggered. Trigger sweep a few times until voltmeter indicates least negative VO voltage. Adjust VO potentiometer A8R62 for a voltmeter indication of −2.00 ±0.10 Vdc.

ADJUSTMENTS

5-18. CALIBRATED SWEEP TIME ADJUSTMENT

REFERENCE:

A9 Schematic

DESCRIPTION:

A counter is used to adjust the time interval of the 1 millisecond per division and 5 milliseconds per division sweep times. Calibrated sweep times from 0.1 milliseconds through 50 milliseconds are then checked using the counter time-interval (T.I.) function.

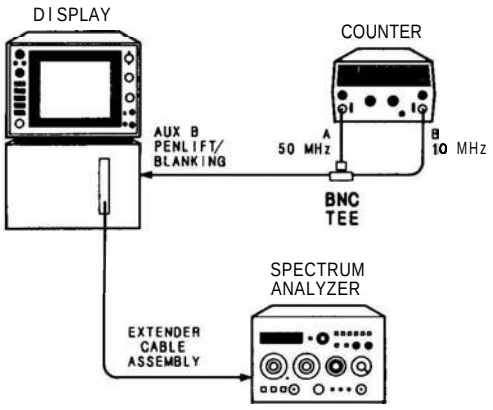

FIGURE 5-2. CALIBRATED SWEEP TIME ADJUSTMENT TEST SETUP

EQUIPMENT:

50 MHz Universal Counter	HP 5300B/5302A
Extender Cable Assembly	HP 5060-0303
BNC Tee	HP 1250-0781

PROCEDURE:

NOTE

Since the calibrated sweep time adjustments are dependent on the +14.5V and −10V power supplies, the Power Supply Checks and Adjustments (paragraph 5-17) should be performed before starting this procedure.

ADJUSTMENTS

5-18. CALIBRATED SWEEP TIME ADJUSTMENT (Cont'd)

1. Set equipment controls as follows:

NOTE

If an HP 853A Spectrum Analyzer Display mainframe is used, and a sweep time faster than 10 msec is selected, an error message will appear on the analyzer's CRT and the analyzer will go into mixed mode.

Spectrum Analyzer:

FREQUENCY BAND GHz	.01 – 3
TUNING	>0.010 GHz
FREQ SPAN/DIV	F (full)
RESOLUTION BW	Optimum, coupled
INPUT ATTEN	10 dB
REFERENCE LEVEL	0 dBm
REF LEVEL FINE	0
Amplitude Scale	10 dB/DIV
SWEEP TIME/DIV	1 msec
SWEEP TRIGGER	FREE RUN
ALT IF	OFF
SIGIDENT	OFF
BLCLIP	OFF
VIDEO FILTER	OFF

50 MHz Universal Counter:

FUNCTION	TI. A to B
SAMPLE RATE	Full counterclockwise
TIME BASE	10 μs
SENSITIVITY (A)	9 o'clock
A 50 MHz INPUT	‾__‾ (falling edge)
SENSITIVITY (B)	9 o'clock
B 10 MHz INPUT	_/‾_ (rising edge)

2. Connect equipment as shown in Figure 5-2.

3. Adjust counter SENSITIVITY controls (both channels) as necessary until counter triggers and indicates a time interval of approximately 10.00 ms.

4. Adjust 1 ms potentiometer A9R10 for a time interval indication of 10.00 ± 0.80 ms.

ADJUSTMENTS

5-18. CALIBRATED SWEEP TIME ADJUSTMENT **(Cont'd)**

NOTE

In early instruments, **A9R13** is labeled "2 **ms."** The adjustment of **A9R13,** however, should be performed with SWEEP **TIME/DIV** set at 5 ms.

5. Set spectrum analyzer SWEEP TIME/DIV control to 5 msec. Readjust counter SENSITIVITY controls as necessary and adjust 5 ms potentiometer A9R13 for a time interval indication of 50.00 ± 4.00 ms.

6. Check time interval for each SWEEP TIME/DIV control setting listed in Table 5-5. Readjust 1 ms potentiometer A9R10 and 5 ms potentiometer A9R13 as necessary if test limits are exceeded.

TABLE 5-5. CALIBRATED SWEEP TIME TEST LIMITS

SWEEP **TIME/DIV** Setting	Sweep Time **(ms)**
.1 ms	1.00 ± 0.10
.2 ms	2.00 ± 0.20
.5 ms	5.00 ± 0.40
1 ms	10.00 ± 0.80
2 ms	20.00 ± 1.50
5 ms	50.00 ± 4.00
10 ms	100.00 ± 8.00
20 ms	200.00 ± 16.00
50 ms	500.00 ± 40.00

ADJUSTMENTS

5-19. LOG AMPLIFIER LOG AND LINEAR ADJUSTMENTS

REFERENCE:

A14 and A15 Schematics

DESCRIPTION:

Step attenuators are used to change the level of the input signal to the spectrum analyzer in calibrated steps. The output of Vertical Driver and Blanking Assembly A15 is monitored, and adjustments are performed to calibrate Log Amplifier Assembly A14.

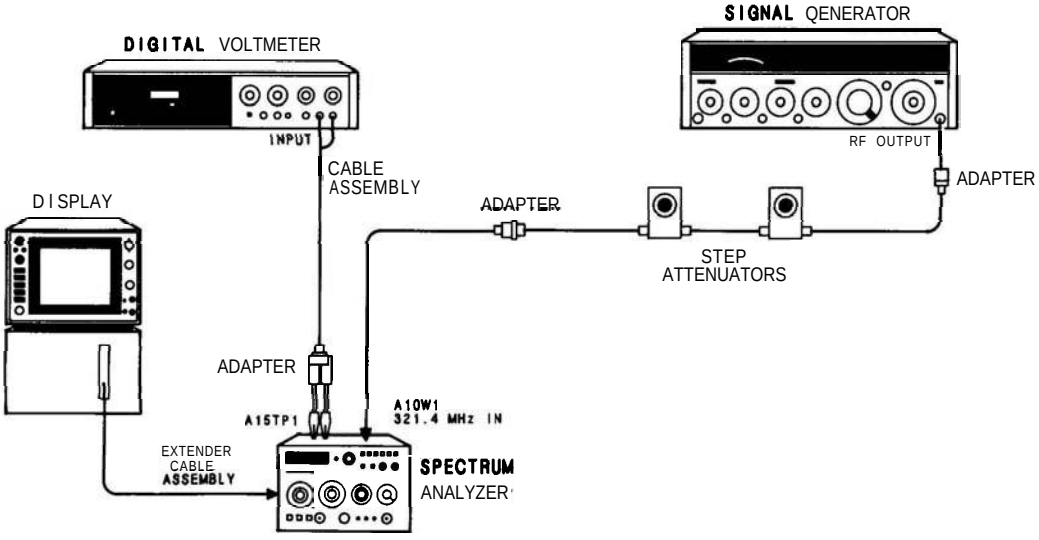

FIGURE 5-3. LOG AMPLIFIER LOG AND LINEAR ADJUSTMENTS TEST SETUP

EQUIPMENT:

Signal Generator	HP 8640B
Digital Voltmeter	HP 3456A
Step Attenuator (10-dB/step)	HP 355D, Opt. H82
Step Attenuator (1-dB/step)	HP 355C, Opt. H80
Cable Assembly, Banana Plug to BNC (m)	HP 11001A
Adapter, Type N(m) to BNC (f)	HP 1250-0780
Adapter, SMC (m) to BNC (f)	HP 1250-0832
Extender Cable Assembly	HP 5060-0303

ADJUSTMENTS

5-19. LOG AMPLIFIER LOG AND LINEAR ADJUSTMENTS (Cont'd)

PROCEDURE:

1. Set equipment controls as follows:

   Spectrum Analyzer:

   FREQUENCY BAND GHz ..... .01 – 3
   TUNING ..... >0.010 GHz
   FREQ SPAN/DIV 0
   RESOLUTION BW ..... 300 kHz, uncoupled
   INPUT ATTEN ..... 10 dB
   REFERENCE LEVEL ..... – 50 dBm
   REF LEVEL FINE 0
   Amplitude Scale ..... LIN
   SWEEP TIME/DIV ..... AUTO
   SWEEP TRIGGER ..... FREE RUN
   ALT IF ..... OFF
   SIG IDENT ..... OFF
   BLCLIP ..... OFF
   VIDEO FILTER ..... OFF

   Signal Generator:

   COUNTER MODE ..... INT
   AM ..... OFF
   FM ..... OFF
   FREQUENCY TUNE ..... 321.4 MHz
   RF ..... ON
   OUTPUT LEVEL ..... approx. – 28 dBm

2. Set 1-dB step attenuator to 10 dB and 10-dB step attenuator to 0 dB. Remove A10W1 (blue cable) from A5J2 and connect equipment as shown in Figure 5-3, using adapter to connect step attenuator to A10W1.

NOTE

The HP 355C 10 dB attenuation is included to compensate for 10 dB of gain on Step Gain Assembly A12 with the TEST-NORM switch in TEST.

3. Set TEST-NORM switch on Step Gain Assembly A12 to TEST position. Adjust signal generator FREQUENCY TUNE control for maximum signal amplitude on display with 10-dB step attenuator set to 0 dB (reduce signal generator OUTPUT LEVEL control setting as necessary to bring signal on-screen).

ADJUSTMENTS

5-19. LOG AMPLIFIER LOG AND LINEAR ADJUSTMENTS (Cont'd)

4. Disconnect signal generator output from step attenuator. Adjust spectrum analyzer VERTICAL POSN control to position signal trace at bottom CRT graticule line. Measure dc offset voltage at A15TP1 and record.

_____mV

5. Connect signal generator to step attenuator and adjust signal generator FINE TUNE control to peak signal on CRT display.

6. Adjust signal generator OUTPUT LEVEL for digital voltmeter (DVM) reading (±1 mV) of 800 mV plus offset recorded in step 4, as measured at A15TP1. Adjust spectrum analyzer VERTICAL GAIN control to position signal trace at top graticule line.

7. Set spectrum analyzer Amplitude Scale control to 10 dB/DIV.

8. Set 10-dB step attenuator to 0 dB and adjust SLOPE potentiometer A14R23 for DVM reading (±1 mV) of 800 mV plus offset recorded in step 4, as measured at A15TP1.

9. Set 10-dB step attenuator to 60 dB and adjust OFFSET potentiometer A14R10 for DVM reading (±1 mV) of 200 mV plus offset recorded in step 4, as measured at A15TP1.

10. Repeat steps 8 and 9 until no further adjustment is necessary.

11. Set 10-dB step attenuator to 30 dB and adjust SLOPE potentiometer A14R23 for DVM reading (±1 mV) of 500 mV plus offset recorded in step 4, as measured at A15TP1.

12. Set 10-dB step attenuator to 60 dB and adjust OFFSET potentiometer A14R10 for DVM reading (±1 mV) of 200 mV plus offset recorded in step 4.

13. Repeat steps 11 and 12 until no further adjustment is necessary.

14. Set 10-dB step attenuator to 10 dB and adjust –30 dB potentiometer A14R69 for DVM reading (±1 mV) of 700 mV plus offset recorded in step 4.

15. Set 10-dB step attenuator to 0 dB and adjust –10 dB potentiometer A14R39 for DVM reading (±1 mV) of 800 mV plus offset recorded in step 4.

16. Set 10-dB step attenuator to 60 dB and adjust OFFSET potentiometer A14R10 for DVM reading (±1 mV) of 200 mV plus offset recorded in step 4.

17. Set 10-dB step attenuator to 0 dB and adjust SLOPE potentiometer A14R23 for DVM reading (±1 mV) of 800 mV plus offset recorded in step 4.

18. Repeat steps 16 and 17 until no further adjustment is necessary.

19. Check log fidelity per Table 5-6. If test limits are not met, repeat steps 8 through 18.

ADJUSTMENTS

5-19. LOG AMPLIFIER LOG AND LINEAR ADJUSTMENTS (Cont'd)

TABLE 5-6. LOG FIDELITY CHECK

Step Attenuator Setting (dB)	DVM Reading (mV)	Corrected DVM Reading* (mV)	Test Limits (mV)	Theoretical Reading (mV)	Theoretical Reading Subtracted from Corrected DVM Reading (mV)	Difference Between Adjacent Readings** (mV)
0	_____	_____	800 ± 1	800	_____	
10	_____	_____	700 ± 3	700	_____	_____
20	_____	_____	600 ± 4	600	_____	_____
30	_____	_____	500 ± 4	500	_____	_____
40	_____	_____	400 ± 5	400	_____	_____
50	_____	_____	300 ± 6	300	_____	_____
60	_____	_____	200 ± 7	200	_____	_____
70	_____	_____	100 ± 8	100	_____	_____

* DVM reading minus offset recorded in step 4.
**All values in the Difference Between Adjacent Readings column must be less than or equal to ± 10 mV.

Example (+5 mV offset):

TABLE 5-7. SAMPLE COMPUTATIONS OF AMPLITUDE LOG DISPLAY ACCURACY

Step Attenuator Setting (dB)	DVM Reading (mV)	Corrected DVM Reading* (mV)	Theoretical Reading (mV)	Theoretical Reading Subtracted from Corrected DVM Reading (mV)	Difference Between Adjacent Readings** (mV)
0	+805	+800	+800	0	
10	+708	+703	+700	+3	−3
20	+599	+594	+600	−6	+9
30	+497	+492	+500	−8	+2
40	+406	+401	+400	+1	−9

* DVM Reading minus offset recorded in step 4.
** All values in the Difference Between Adjacent Readings column must be less than or equal to ± 10 mV.

ADJUSTMENTS

5-19. LOG AMPLIFIER LOG AND LINEAR ADJUSTMENTS (Cont'd)

Linear Output and Linear Step Gain

20. Disconnect A10W1 from step attenuator and reconnect to A5J2.

CAUTION

When reconnecting **A10W1** to **A5J2,** do not tighten to over 6 inch pounds of torque; **A5J2** can be damaged if the connector is overtightened.

Set spectrum analyzer controls as follows:

INPUT ATTEN ..... 10 dB
REFERENCE LEVEL ..... –50 dBm
FREQ SPAN/DIV 0
TUNING ..... 30 MHz

Set signal generator controls as follows:

OUTPUT LEVEL ..... approx. –5 dBm
FREQUENCY ..... 30 MHz

Set 10 dB step attenuator to 0 dB.

21. Remove adapter from step attenuator and connect step attenuator to spectrum analyzer input. Adjust the signal generator OUTPUT LEVEL for a DVM reading (±1 mV) of 800 mV plus offset recorded in step 4 (measured at A15TP1).

22. Set spectrum analyzer amplitude scale for Linear display (LIN) and adjust LIN control A14R34 for DVM reading (±1 mV) of 800 mV plus offset recorded in step 4.

23. Make adjustments indicated in Table 5-8, then recheck that all steps meet the DVM test limits. Between adjustments, recheck tuning of spectrum analyzer to be certain signal remains peaked.

TABLE 5-8. LINEAR GAIN ADJUSTMENTS

Adjustment	Step Attenuator	Reference Level (dBm)	DVM Reading *
A14R34	0	–50	Ref: 800±1 mV
A14R33	10	–60	800±5 mV
A14R30	20	–70	800±5 mV
A14R27	30	–80	800±5 mV
No adjustment	40	–90	800±20 mV

*After subtracting offset.

ADJUSTMENTS

5-19. LOG AMPLIFIER LOG AND LINEAR ADJUSTMENTS (Cont'd)

Log Gain

24. Set spectrum analyzer controls as follows:

REFERENCE LEVEL ..... –50 dBm
Amplitude Scale ..... 1 db/DIV

25. Set 10-dB step attenuator to 0 dB. Retune spectrum analyzer for peak signal. Adjust signal generator OUTPUT LEVEL for DVM reading (±1 mV) of 800 mV plus offset recorded in step 4, as measured at A15TP1.

26. Set 10-dB step attenuator to 40 dB. Set REFERENCE LEVEL to –90 dBm and adjust LOG GAIN control A14R121 for DVM reading of 800 mV plus offset recorded in step 4, as measured at A15TP1.

27. Check log gain steps according to Table 5-9. If limits are not met, repeat steps 25 through 27. If limits still are not met, return to step 1.

TABLE 5-9. LOG GAIN ADJUSTMENT LIMITS

Step Attenuator	Reference Level (dBm)	DVM Reading*
0	–50	Ref: 800±1 mV
10	–60	800+30mV
20	–70	800+30mV
30	–80	800+30mV
40	–90	800+30mV

*After subtracting offset.

28. Set spectrum analyzer controls as follows:

REFERENCE LEVEL ..... –50 dBm
Amplitude Scale ..... 1 dB/DIV

29. Set both step attenuators to 0 dB. Reduce signal generator OUTPUT LEVEL until signal appears at top of display. Adjust spectrum analyzer FINE TUNE to peak trace on display and adjust signal generator OUTPUT LEVEL for DVM reading (±1 mV) of 800 mV plus offset recorded in step 4, as measured at A15TP1. Increase attenuation in 1-dB steps as shown in Table 5-10 and take DVM readings to check log amplifier output.

30. Return TEST-NORM switch A12S1 to NORM.

ADJUSTMENTS

5-19. LOG AMPLIFIER LOG AND LINEAR ADJUSTMENTS (Cont'd)

TABLE 5-10. LOG AMPLIFIER OUTPUT LIMITS

Step Attenuator Setting (dB)	DVM Reading (mV)	Corrected DVM Reading* (mV)	Test Limits (mV)	Theoretical Reading (mV)	Theoretical Reading Subtracted from Corrected DVM Reading (mV)	Difference Between Adjacent Readings** (mV)
0	_____	_____	800 ±1	+800	0	_____
1	_____	_____	700 ±10	+700	_____	_____
2	_____	_____	600 ±20	+600	_____	_____
3	_____	_____	500 ±30	+500	_____	_____
4	_____	_____	400 ±30	+400	_____	_____
5	_____	_____	300 ±30	+300	_____	_____
6	_____	_____	200 ±30	+200	_____	_____
7	_____	_____	100 ±30	+100	_____	_____

*DVM Reading minus offset.
**All values in the Difference Between Adjacent Readings column must be less than or equal to ±10 mV

ADJUSTMENTS

5-20. 1-dB OFFSET ADJUSTMENT

REFERENCE:

A15 Schematic

DESCRIPTION:

Reference is set in 10 dB/DIV amplitude scale and 1 dB offset is adjusted in 1 dB/DIV for the same full display reference.

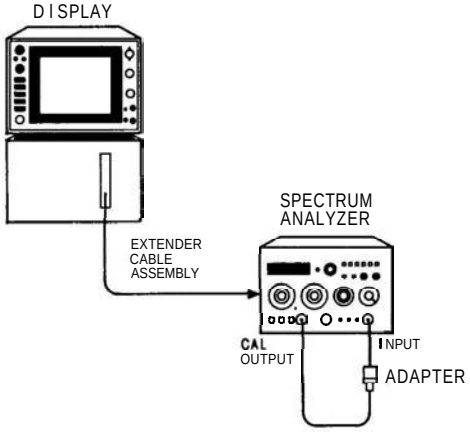

FIGURE 5-4. 1-dB OFFSET ADJUSTMENT TEST SETUP

EQUIPMENT:

Adapter, Type N (m) to BNC (f)	HP 1250-0780
Extender Cable Assembly	HP 5060-0303
BNC Cable, 9-Inch	HP 10502A

PROCEDURE:

1. Set spectrum analyzer controls as follows:

FREQUENCY BAND GHz	.01 – 3
TUNING	>60 MHz
FREQ SPAN/DIV	1 MHz
RESOLUTION BW	1 MHz, uncoupled
INPUT ATTEN	10 dB
REFERENCE LEVEL	0 dBm
REF LEVEL FINE	0
Amplitude Scale	LIN
SWEEP TIME/DIV	AUTO
SWEEP TRIGGER	FREE RUN
ALT IF	OFF
SIG IDENT	OFF
BL CLIP	OFF
VIDEO FILTER	OFF

ADJUSTMENTS

5-20. 1-dB OFFSET ADJUSTMENT (Cont'd)

2. Connect equipment as shown in Figure 5-4.

3. Adjust vertical position to align trace on bottom graticule.

4. Set tuning to 35 MHz. Set TUNING control to center the trace on the display. Set REF LEVEL FINE for a full-screen trace (signal at top graticule line).

5. Set Amplitude Scale to 10 dB/DIV. Adjust VERT GAIN if necessary for full screen trace.

6. Repeat steps 3 and 4 until the trace is full screen in both LIN and 10 dB/DIV.

NOTE

1 **dB/DIV** will read approximately 0.5 dB (0.5 division) low when using extender cable assembly. Adjusting **A15R1** 1 dB OFFSET for a trace 0.5 division down from top graticule line should place signal at top graticule line when HP **8559A** is properly installed in display mainframe.

7. Set Amplitude Scale to 1 dB/DIV. Adjust A15R1 1 dB OFFSET for a trace 0.5 division down from top graticule line.

ADJUSTMENTS

5-21. BANDWIDTH FILTER ADJUSTMENTS

REFERENCE:

A9, A11, and A13 Schematics

DESCRIPTION:

The crystal and LC bandwidth filter circuits are adjusted for symmetry, center, and peak. The 3-dB bandwidths are adjusted with Sweep Generator/Bandwidth Control Assembly A9 (paragraph 5-22).

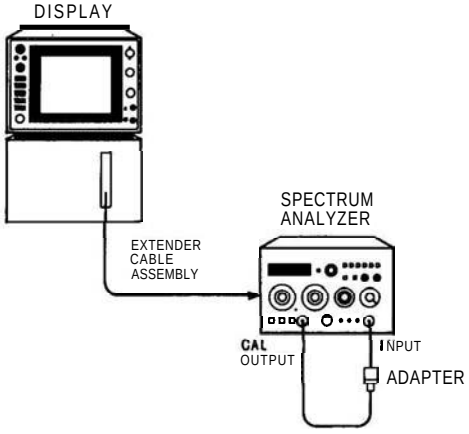

FIGURE 5-5. CRYSTAL AND LC BANDWIDTH FILTER ADJUSTMENTS TEST SETUP

EQUIPMENT:

Adapter, Type N (m) to BNC (f)	HP 1250-0780
Crystal Short (3 required)	See Figure 5-6
Extender Cable Assembly	HP 5060-0303

NOTE

A crystal short consists of a .01 μF capacitor (HP Part Number 0160-0161) and a 90.9 ohm resistor (HP Part Number 0757-0400) connected in series. Two square terminal connectors (HP Part Number 0362-0265) are used to connect the crystal short across the test points.

ADJUSTMENTS

5-21. BANDWIDTH FILTER ADJUSTMENTS (Cont'd)

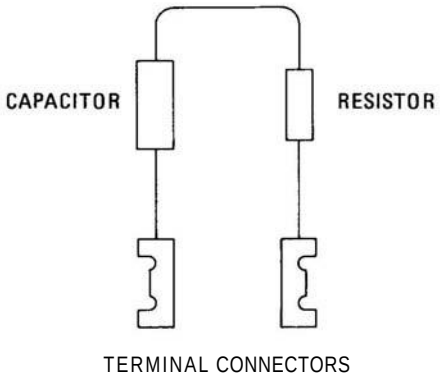

FIGURE 5-6. CRYSTAL SHORT CONFIGURATION

PROCEDURE:

NOTE

Allow 30 minutes **warmup** time before performing adjustments.

1. Set spectrum analyzer controls as follows:

FREQUENCY BAND	.01 – 3 GHz
TUNING	35 MHz
FREQ SPAN/DIV	200 kHz
RESOLUTION BW	1 MHz
INPUT ATTEN	10 dB
REFERENCE LEVEL	0 dBm
Amplitude Scale	LIN
SWEEP TIME/DIV	10 msec
SWEEP TRIGGER	FREE RUN

Crystal Alignment

2. Connect equipment as shown in Figure 5-5.

NOTE

If Sweep Generator A9 has been replaced or adjusted, perform steps 3 through 8. If not, proceed to step 9.

ADJUSTMENTS

5-21. BANDWIDTH FILTER ADJUSTMENTS (Cont'd)

3. Center the signal with TUNING control. Using REF LEVEL FINE control, place signal peak at 7.1 divisions (0.9 division from top graticule line).
4. Adjust A9R85 LC until signal is five divisions wide at the fifth graticule line (1 MHz wide at 3-dB points).
5. Set FREQ SPAN/DIV to 10 kHz and RESOLUTION BW to 10 kHz.
6. Center the signal with FINE TUNING control.
7. Using REF LEVEL FINE control, place signal peak at 7.1 divisions.
8. Adjust A9R72 XTL until signal is one division wide at the fifth graticule line (10 kHz wide at 3-dB points).
9. Set FREQ SPAN/DIV to 20 kHz and RESOLUTION BW to 30 kHz.
10. Center signal with TUNING control.
11. Adjust REF LEVEL FINE control to place signal at sixth graticule line.
12. Remove top guide rail. Connect crystal shorts (through cover access holes) across the following pairs of test points: A13TP1/TP2, A11TP1/TP2, and A11TP4/TP5.

NOTE

Keep crystal spike centered during adjustments. The SYM and CTR adjustments for each crystal interact (the signal also drifts in this narrow span).

13. Adjust front-panel TUNING control to center bandpass spike (Figure 5-7) on the CRT display.

NOTE

A **non-metallic** tuning tool is required for adjustments on the A11 and A13 bandwidth filter assemblies.

14. Adjust A13C54 CTR for minimum signal amplitude. Then adjust A13C38 SYM and A13C54 CTR for a centered and symmetrical bandpass as shown in Figure 5-7.

ADJUSTMENTS

5-21. BANDWIDTH FILTER ADJUSTMENTS (Cont'd)

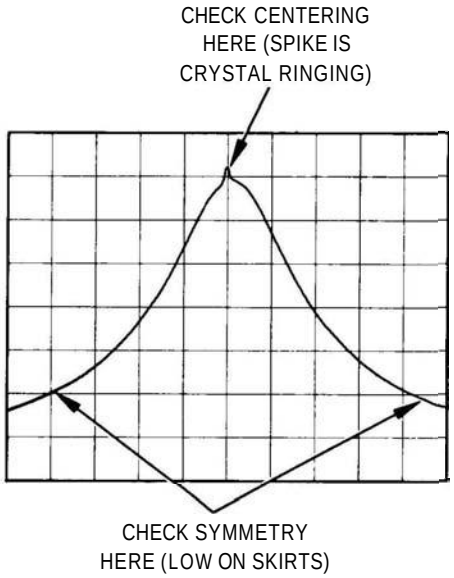

FIGURE 5-7. ADJUSTING CRYSTAL SYMMETRY AND CRYSTAL CENTERING

15. Remove crystal short from A13TP1/TP2 and connect it across A13TP4/TP5.

16. Adjust A13C25 CTR for minimum signal amplitude. Then adjust A13C15 SYM and A13C25 CTR for a centered and symmetrical bandpass.

17. Remove crystal short from A11TP4/TP5 and connect it across A13TP1/TP2.

18. Adjust A11C54 CTR for minimum signal amplitude. Then adjust A11C38 SYM and A11C54 CTR for a centered and symmetrical bandpass.

19. Remove crystal short from A11TP1/TP2 and connect it across A11TP4/TP5.

20. Adjust A11C25 CTR for minimum signal amplitude. Then adjust A11C15 SYM and A11C25 CTR for a centered and symmetrical bandpass.

21. Remove the crystal shorts.

22. Set FREQ SPAN/DIV to 10 kHz and RESOLUTION BW to 30 kHz. Center signal on CRT with TUNING control.

23. Switch RESOLUTION BW from 30 kHz to 10 kHz and back several times. Verify that signal shift does not exceed 3 kHz (0.3 divisions). If signal shift is out of tolerance, return to step 11.

ADJUSTMENTS

5-21. BANDWIDTH FILTER ADJUSTMENTS (Cont'd)

LC Alignment

CAUTION

Accidentally shorting the case of **A9Q1** (directly below **A9TP6**) to ANY test point will cause catastrophic failure to Sweep Generator Assembly **A9.**

24. Set RESOLUTION BW control to 100 kHz. Jumper A9TP6 to A9TP8. This forces the BW7 line to +15V. Set FREQ SPAN/DIV to 100 kHz.

NOTE

When Bandwidth Filter Assemblies **A11** and A13 are installed with covers in place, midget copper alligator clips (HP Part Number 1400-0483) can be used to short test points to the cover.

25. Perform preliminary LC filter adjustments as follows:

NOTE

It might be necessary to adjust the REF LEVEL **FINE** control to obtain an **on-**screen display during the following adjustments.

a. Remove A! 3 cover and install A13 on extender board.

b. Short to ground the following test points: A13TP6, A11TP3, and A11TP6. (This widens all but one LC pole).

c. Center signal on CRT with TUNING control. Adjust A13C73 for minimum signal amplitude.

d. Disconnect short from A13TP6 and short to ground A13TP3.

e. Adjust A13C74 for minimum signal amplitude. Remove shorts from A13TP3, A11TP3, and A11TP6.

f. Reinstall A13 and cover. Short A13TP3 and A13TP6 to ground. Remove A11 cover and install A11 on extender board.

g. Short A11TP6 to ground.

h. Adjust A11C73 for minimum signal amplitude.

i. Disconnect short from A11TP6 and short to ground A11TP3.

j. Adjust A11C74 for minimum signal amplitude.

k. Disconnect shorts from test points and reinstall A11 and cover. Leave jumper from A9TP6 to A9TP8 in place.

ADJUSTMENTS

5-21. BANDWIDTH FILTER ADJUSTMENTS **(Cont'd)**

26. Short to ground A11TP3, A11TP6, and A13TP3. Set RESOLUTION BW to 100 kHz and set FREQ SPAN/DIV to 20 kHz.

27. Center signal on CRT with TUNING control. Adjust A13C45 LC CTR for symmetrical bandpass display on CRT. Use FINE TUNING control to keep crystal spike centered.

NOTE

The crystal spike represents the center frequency of the crystal poles. In this procedure we are aligning the LC poles with the crystal poles. On some instruments, the crystal spike may not be very pronounced, in which case the center frequency of the 100 kHz RBW will have to be compared to the center frequency of the 30 kHz RBW.

28. Move short from A13TP3 to A13TP6. Leave other shorts in place. Center signal on CRT with TUNING control. Adjust A13C23 LC CTR for symmetrical bandpass display on CRT, keeping crystal spike centered.

29. Move short from A11TP6 to A13TP3. Leave other shorts in place. Center signal on CRT with TUNING control. Adjust A11C45 LC CTR for symmetrical bandpass display on CRT, keeping crystal spike centered.

30. Move short from A11TP3 to A11TP6. Leave other shorts in place. Center signal on CRT with TUNING control. Adjust A11C23 LC CTR for symmetrical bandpass display on CRT, keeping crystal spike centered.

31. Disconnect shorts from A11TP6, A13TP3, A13TP6, and from ground. Remove jumper from A9TP6 and A9TP8.

32. Set FREQ SPAN/DIV to 10 kHz and RESOLUTION BW to 30 kHz. Center signal on CRT with TUNING control. Set RESOLUTION BW to 100 kHz and note where signal crosses center vertical graticule line.

33. Adjust A11C23, A11C45, A13C23, and A13C45 in succession so that amplitude of signal is peaked where it crosses center vertical CRT graticule line, repeating step 32 between adjustments as necessary.

34. Repeat steps 32 and 33 until 30 kHz and 100 kHz bandwidths are centered with each other. If signal shift between 30 kHz and 100 kHz bandwidths is greater than 10 kHz (1 division), repeat steps 24 through 33.

Bandwidth Amplitude

35. Set Amplitude Scale switch to 1 dB/DIV and jumper A9TP6 to A9TP8.

36. Short A11TP3, A11TP6, A13TP3, and A13TP6 to ground.

37. Set RESOLUTION BW to 100 kHz and FREQ SPAN/DIV to 200 kHz.

ADJUSTMENTS

5-21. BANDWIDTH FILTER ADJUSTMENTS (Cont'd)

38. Adjust FINE TUNING and REF LEVEL FINE controls for a centered signal at 7 divisions from bottom graticule line.

39. Remove shorts from A13TP3 and A13TP6 and center signal with FINE TUNING control. Adjust A13R26 LC for a signal amplitude of 7 divisions. Replace shorts on A13TP3 and A13TP6.

40. Remove shorts from A11TP3 and A11TP6. Adjust A11R26 LC for a signal amplitude of 7 divisions.

41. Repeat steps 36 through 40 until no further adjustments necessary. Remove shorts from A11TP3, A11TP6, A13TP3, and A13TP6.

42. Adjust A11R31 XTL and A13R31 XTL fully counterclockwise.

43. Set RESOLUTION BW to 1 kHz and FREQ SPAN/DIV to 10 kHz. Center signal with FINE TUNING control. Adjust A11R31 XTL and A13R31 XTL equally for a signal amplitude of 7 divisions. Each potentiometer should be adjusted to accomplish half the necessary increase in signal amplitude.

44. Remove jumper from A9TP6 and A9TP8.

45. Set FREQ SPAN/DIV to 500 kHz and RESOLUTION BW to 3 MHz.

46. Center signal with TUNING control. Adjust REF LEVEL FINE control for a signal amplitude of 7 divisions.

47. Step down RESOLUTION BW from 3 MHz tp 300 kHz. Variation in signal amplitude should be less than ±0.4 dB.

48. Set FREQ SPAN/DIV to 10 kHz, TIME/DIV to AUTO, and step down RESOLUTION BW from 100 kHz to 1 kHz. Variation of signal amplitude should be less than ±0.7 dB from the 7th division reference.

49. Repeat steps 35 through 46 until variation in signal amplitude is within limits.

NOTE

If amplitude variation between crystal and LC poles exceeds specification, A11R7*/A13R7* can be replaced to bring the crystal poles to the amplitude of the LC poles.

ADJUSTMENTS

5-22. 3-dB BANDWIDTH ADJUSTMENTS

REFERENCE:

A9 Schematic

DESCRIPTION:

The 3-dB bandwidths for the 3 MHz through the 30 kHz RESOLUTION BW settings are adjusted using the CAL OUTPUT as the signal source. The 3-dB bandwidths for the 10 kHz, 3 kHz, and 1 kHz RESOLUTION BW settings are adjusted by injecting a stable 321.4 MHz signal into the Third Converter (A10) of the spectrum analyzer.

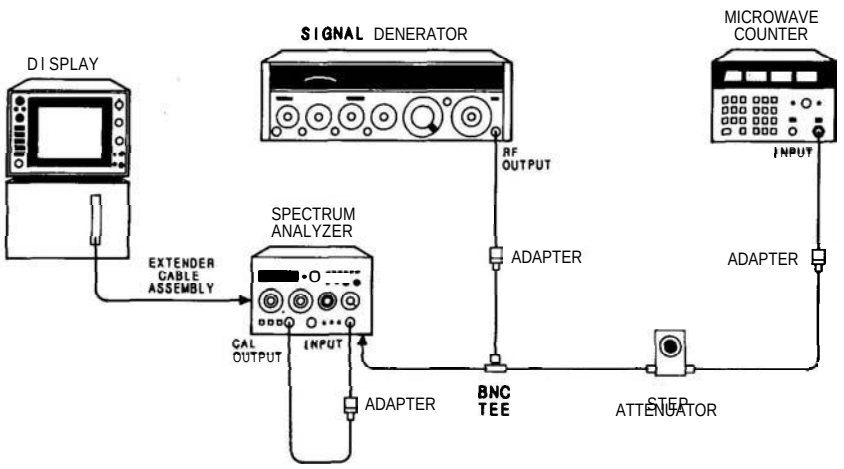

FIGURE 5-8. 3-dB BANDWIDTH ADJUSTMENT TEST SETUP

EQUIPMENT:

Signal Generator	HP 8640B
Frequency Counter	5342A
Step Attenuator	HP 355D
Adapter, Type N (m) to BNC (f) (2 required)	HP 1250-0780
Extender Cable Assembly	HP 5060-0303
Test Cable, BNC to SMB	HP 8568-60093
BNC Tee	HP 1250-0781

ADJUSTMENTS

5-22. 3-dB BANDWIDTH ADJUSTMENTS **(Cont'd)**

PROCEDURE:

1. Set spectrum analyzer controls as follows:

FREQUENCY BAND	0.01 – 3 GHz
TUNING	35 MHz
FREQ SPAN/DIV	200 kHz
RESOLUTION BW	1 MHz
INPUT ATTEN	10 dB
REFERENCE LEVEL	0 dBm
Amplitude Scale	LIN
SWEEP TIME/DIV	2 msec
SWEEP TRIGGER	FREE RUN
VIDEO FILTER	OFF
BASELINE CLIPPER	OFF
853A (if used)	TRACE A & TRACE B STORE BLANK (ANALOG DISPLAY)

2. Connect CAL OUTPUT to spectrum analyzer INPUT

3. Set a 7.1 division signal level on display with REF LEVEL FINE control. Signal will be 0.9 division from top graticule line.

4. Adjust A9R85 LC control for a 5 division wide signal at fifth graticule line.

5. Set RESOLUTION BW to 3 MHz and FREQ SPAN/DIV to 500 kHz. If necessary, reset signal level to 7.1 divisions with REF LEVEL FINE control. The bandwidth at the fifth graticule line should be between 5.4 and 6.6 divisions.

NOTE

A9R85 LC may be further adjusted to bring the 3 MHz and 300 kHz bandwidths within limits; however, the final measurement of the 1 MHz bandwidth must be between 4.5 and 5.5 division at the fifth graticule line. (If the 3 MHz bandwidth cannot be brought within limits by adjustment of **A9R85** LC, change the value of factory-selected resistor **A9R120*.** If the 300 kHz bandwidth cannot be brought within limits by adjustment of **A9R85** LC, change the value of **A9R116*.)**

6. Set RESOLUTION BW to 300 kHz and FREQ SPAN/DIV to 50 kHz. If necessary, reset signal level to 7.1 divisions with REF LEVEL FINE control. The bandwidth should be between 5.4 and 6.6 divisions at the fifth graticule line.

7. Set RESOLUTION BW to 100 kHz and FREQ SPAN/DIV to 20 kHz. If necessary, reset signal level to 7.1 divisions with REF LEVEL FINE control. The bandwidth should be between 4.3 and 5.7 divisions at the fifth graticule line.

ADJUSTMENTS

5-22. 3-dB BANDWIDTH ADJUSTMENTS **(Cont'd)**

NOTE

If the 100 kHz bandwidth is not within the specified limits, change the values of factory-selected resistors **A11R19*, A11R43*, A13R19*,** and **A13R43*.** If the bandwidth is too wide, increase the value of the resistors; if the bandwidth is too narrow, decrease the value of the resistors. The factory-selected resistors need not be of equal value, but each must be within one standard value of the others.

8. Set RESOLUTION BW to 30 kHz and FREQ SPAN/DIV to 10 kHz. If necessary, reset signal level with REF LEVEL FINE control. The bandwidth should be between 2.6 and 3.4 divisions at the fifth graticule line.

NOTE

If the 30 kHz bandwidth is not within the specified limits, change the values of factory-selected resistors A11**R23*,** A11**R48*, A13R23*,** and **A13R48*.** If the bandwidth is too wide, decrease the value of the factory-selected resistors; if the bandwidth is too narrow, increase the value of the resistors. The factory-selected resistors must be within three standard values of the nominal value.

9. Connect signal generator as shown in Figure 5-8. Tune signal generator to approximately 21.4 MHz. Set the signal generator to approximately 0 dBm and the step attenuator to 10 dB. Set COUNTER MODE to EXPAND X 100.

10. Place spectrum analyzer on right side and connect test cable to Third Converter 21.4 MHz output connector A16J3. If connector is not present (some early instruments were not so supplied), remove A10W1 from A5J2 and connect A10W1 through a 10 dB step attenuator set to 30 dB and the signal generator set for a −10 dBm output level. The 10 dB step attenuator between BNC tee and frequency counter can be eliminated.

11. Set HP 8559A RESOLUTION BW to 1 MHz. Tune signal generator to peak signal on CRT display (near 21.4 MHz) (321.4 MHz if injecting into A10W1). Adjust the output level of signal generator to place the signal at 7.1 divisions.

12. Set RESOLUTION BW to 3 kHz. Tune signal generator to peak signal on CRT display.

13. Adjust REF LEVEL FINE to place signal at 7.1 divisions.

14. Note the counter frequency and tune the signal generator 1500 Hz below the center frequency noted. Record the new counter frequency.

ADJUSTMENTS

5-22. 3-dB BANDWIDTH ADJUSTMENTS (Cont'd)

15. Adjust A9R72 XTL to bring signal level to the fifth graticule line (three divisions from the top graticule line).

16. Increase signal generator frequency until signal on CRT display peaks and then decreases to the fifth graticule line. Record counter frequency.

_____

17. Compare new frequency with frequency recorded in step 14. The difference between the two frequencies should be 2800 to 3200 Hz. If the bandwidth is not within limits, repeat steps 12 through 17, slightly readjusting A9R72 XTL, until the specified limits are achieved.

18. Set RESOLUTION BW to 10 kHz. Tune signal generator to peak signal on CRT display.

19. Adjust REF LEVEL FINE to place signal at 7.1 divisions.

20. Decrease signal generator frequency until the signal on the CRT display is at the fifth graticule line. Record this frequency.

_____

21. Increase the signal generator frequency until the signal on the CRT display peaks and then decreases to the fifth graticule line. Record this frequency.

_____

22. Compare new frequency with frequency recorded in step 20. The difference between the two frequencies should be 9.000 kHz to 11.000 kHz.

NOTE

A9R72 XTL may be further adjusted to bring the 10 kHz and 1 kHz bandwidths within limits; however, the final measurement of the 3 kHz bandwidth must be between 2700 Hz and 3300 Hz. (If the 10 kHz bandwidth cannot be brought within limits by adjusting **A9R72 XTL,** change the value of factory-selected resistor **A9R111*.** If the 1 kHz bandwidth cannot be brought within limits by adjusting **A9R72** XTL, change the value of **A9R109*.)**

23. Set RESOLUTION BW to 1 kHz. Tune signal generator to peak signal on CRT display.

24. Adjust REF LEVEL FINE to place signal at 7.1 divisions.

25. Record the counter frequency.

_____

ADJUSTMENTS

5-22. 3-dB BANDWIDTH ADJUSTMENTS (Cont'd)

26. Increase signal generator frequency until signal on CRT display decreases to the fifth graticule line. Record the counter frequency.

_____

27. Compare new frequency with frequency originally noted in step 25. The difference between the two frequencies should be 450Hz to 550Hz.

ADJUSTMENTS

5-23. RF GAIN ADJUSTMENT

REFERENCE:

A12 Schematic

DESCRIPTION:

The RF gain (sensitivity) of Step Gain Assembly A12 is adjusted by injecting a 21.4 MHz signal at XA10P1. Third Converter Assembly A10 is removed and replaced with a special extender board for applying the 21.4 MHz signal from the signal generator.

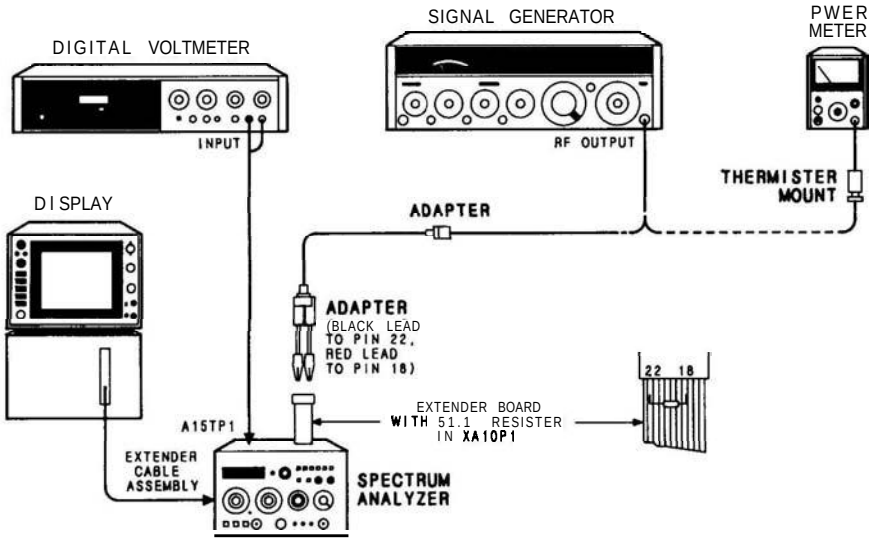

FIGURE 5-9. RF GAIN ADJUSTMENT TEST SETUP

EQUIPMENT:

Signal Generator	HP 8640B
Digital Voltmeter	HP 3456A
Power Meter	HP 435A/B
Power Sensor	HP 8481A
Special Extender Board with 51.1 ohm resistor	HP 5060-0258/0757-0394
Test Cable, BNC (m) to Banana Plug	HP 10111A
Extender Cable Assembly	HP 5060-0303
Adapter, BNC (f) to Alligator Clips (2 required)	HP 8120-1292

ADJUSTMENTS

5-23. RF **GAIN** ADJUSTMENT **(Cont'd)**

NOTE

To make special extender board, solder 51.1 ohm resistor from pin 18 to pin 22 of standard 24 pin extender board, HP Part No. **5060-0258.** Leave resistor leads long for easy connection of clip leads.

PROCEDURE:

1. Set spectrum analyzer controls as follows:

FREQUENCY BAND GHz	.01 – 3
FREQ SPAN/DIV	1 MHz
RESOLUTION BW	1 MHz
INPUT ATTEN	0 dB
REF LEVEL dBm	–10
REF LEVEL FINE	0
Amplitude Scale	LIN
SWEEP TIME/DIV	AUTO
SWEEP TRIGGER	FREE RUN
VIDEO FILTER	MIN

2. Connect equipment as shown in Figure 5-9. Resistor on extender board should be toward rear of HP 8559A.

3. Set signal generator frequency to 21.4 MHz. Set output level for approximately – 5 dBm.

NOTE

To remove Third Converter Assembly **A10,** it will be necessary to disconnect **A10W1** from **A5J2** and temporarily remove Marker Assembly A8 and Sweep **Generator/Res** BW Assembly **A9.**

4. Connect output of signal generator across 51.1 ohm resistor on special board using BNC to clip-lead adapter. The red lead (center conductor) should be connected to pin 18 of extender board.

5. Set signal generator frequency for peak amplitude on CRT display. Connect output of signal generator to power meter through a power sensor and set output level to – 3 dBm. Reconnect signal generator output to clip-lead adapter.

6. Adjust A12R5 GAIN adjustment for signal one division from top graticule line. DVM should indicate + 700 mV ± 30 mV. Remove special extender board and replace Third Converter Assembly A10.

NOTE

If step gain adjustments will be performed next, do not reconnect **A10W1** to **A5J2.**

ADJUSTMENTS

5-23. RF **GAIN** ADJUSTMENT (Cont'd)

CAUTION

When reconnecting **A10W1** to **A5J2,** exercise caution; the connector should not be torqued more than 6 inch-pounds, **otherwise** damage to **A5J2** will result.

NOTE

Front panel VERTICAL **GAIN** and POSN control settings can affect the voltage measured at **A15TP1.** Vertical calibration should be checked after adjusting **A12R5** for 700 **mV** (Refer to Section **III).**

ADJUSTMENTS

5-24. STEP GAIN ADJUSTMENTS

REFERENCE:

A12 Schematic

DESCRIPTION:

REFLEVEL FINE, 0 dB, and – 12 dB adjustments are properly set and step gains of 10 dB, 20 dB, and 40 dB are adjusted.

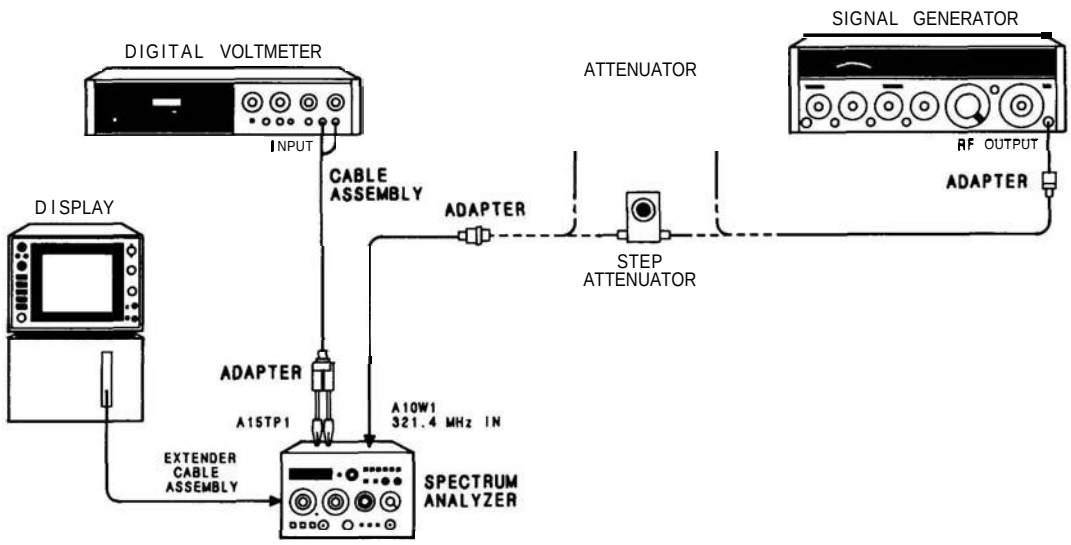

FIGURE 5-10. STEP GAIN ADJUSTMENTS TEST SETUP

EQUIPMENT:

Signal Generator	HP 8640B
Step Attenuator (1 dB/Step)	HP 355C, Option H80
Step Attenuator (10 dB/Step)	HP 355D, Option H82
Digital Voltmeter	HP 3456A
Adapter, Type N (m) to BNC (f)	HP 1250-0780
Adapter, BNC (m) to SMC (m)	HP 1250-0831
Cable, BNC (m) to Banana Plug	HP 10111A
Extender Cable Assembly	HP 5060-0303
Adapter, BNC (f) to Alligator Clips	HP 8120-1292

ADJUSTMENTS

5-24. STEP GAIN ADJUSTMENTS (Cont'd)

PROCEDURE:

1. Set spectrum analyzer controls as follows:

FREQ SPAN/DIV	1 MHz
RESOLUTION BW	1 MHz
INPUT ATTEN	10 dB
REF LEVEL dBm	0
Amplitude Scale	1 dB/DIV
SWEEP TIME/DIV	AUTO
SWEEP TRIGGER	FREE RUN
VIDEO FILTER	MIN

2. Connect equipment as shown in Figure 5-10. Connect signal generator tuned to 321.4 MHz with approximately – 30 dBm output to one side of a 1 dB/step attenuator. Connect step attenuator output to A10W1 through adapter. Tune signal generator frequency for peak amplitude on display.

3. Set step attenuator to 12 dB and REF LEVEL FINE to – 12. Set signal generator level for a signal one division down from top graticule line.

4. Adjust A12R39 – 12 D until signal stops rising on display, then adjust A12R39 counterclockwise until signal drops approximately one third to one half of a division.

5. Set signal generator level so signal is one division down from top graticule line on display.

6. Set step attenuator to 0 dB and REF LEVEL FINE to 0.

7. Adjust A12R35 0 D adjustment for a signal level one division from top graticule line.

8. Set step attenuator to 12 dB and REF LEVEL FINE to – 12. DVM indication should be 700 ± 30 mV (offset). If offset is greater than ± 30 mV, repeat steps 3 through 8 until DVM indication is within limits.

9. Replace 1 dB/step attenuator with 10 dB/step attenuator set to 0 dB. Set REF LEVEL FINE control to 0.

10. Tune signal generator frequency for peak amplitude on the display (near 321.4 MHz).

11. Set signal generator level for a signal one division down from top graticule line. Set step attenuator to 10 dB and REF LEVEL dBm to – 10.

12. Adjust A12R6 10 D adjustment for signal level one division from top graticule line.

13. Set step attenuator to 20 dB and REF LEVEL dBm to – 20.

14. Adjust A12R21 20 D adjustment for signal level one division from top graticule line.

15. Set attenuator to 40 dB and REF LEVEL dBm to – 40.

ADJUSTMENTS

5-24. STEP **GAIN** ADJUSTMENTS (Cont'd)

NOTE

Some video filtering might help reduce noise. Set VIDEO FILTER control so noise is reduced, but the signal amplitude remains unchanged.

16. Adjust A12R29 40 D adjustment fo signal level one division from top graticule line.

17. Check REF LEVEL dBm control from 0 to – 50 as shown in Table 5-11.

TABLE 5-11. REF LEVEL CONTROL CHECK

Reference Level (dBm)	Attenuator (dB)	Deviation From Reference (700 +20 mV)
0	0	Reference mV
–10	10	Reference +40 mV
2 0	20	Reference 240 mV
–30	30	Reference +40 mV
–40	40	Reference +40 mV
–50	50	Reference ±40 mV

18. Reconnect A10W1 to A5J2.

CAUTION

When reconnecting **A10W1** to **A5J2,** exercise caution. The connector should not be torqued to more than 6 inch-pounds; otherwise, damage to **A5J2** will result.

ADJUSTMENTS

5-25. FIRST CONVERTER ADJUSTMENTS

REFERENCE:

A3, A4, AS, A6, and A7 Schematics

DESCRIPTION:

The First LO (A6 YTO) is adjusted by monitoring the YTO output at the RF input connector (LO emission) and the tuning voltage (TUNE) output of the A7 Frequency Control board, and adjusting the YTO low-end frequency for 3 GHz at OV tuning voltage and 6 GHz at – 10V tuning voltage.

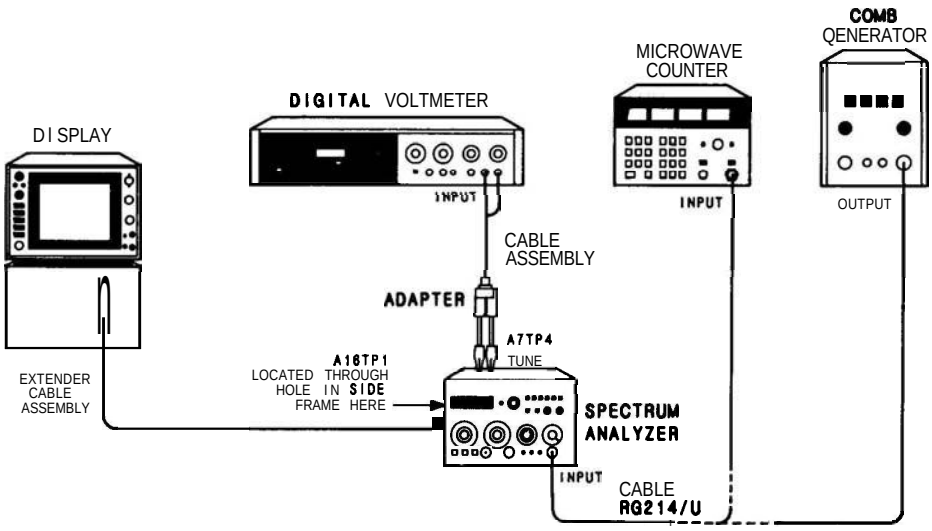

FIGURE 5-11. FIRST CONVERTER ADJUSTMENTS TEST SETUP

EQUIPMENT:

Frequency Counter	HP 5342A
Digital Voltmeter	HP 3456A
Comb Generator	HP 8406A
Cable, BNC (m) to Banana Plug	HP 10111A
Extender Cable Assembly	HP 5060-0303
Adapter, BNC (f) to Alligator Clips	HP 8120-1292
Cable Assembly, RG-214/U, Type N Connectors	HP 11500A

PROCEDURE:

1. Allow one-half hour warmup time of equipment with spectrum analyzer connected to mainframe with extender cable.

ADJUSTMENTS

5-25. FIRST CONVERTER ADJUSTMENTS (Cont'd)

First LO Adjustments

2. Connect DVM to A7TP6 TUNE.

3. Set spectrum analyzer controls as follows:

INPUT ATTEN	0 dB
FREQ SPAN/DIV	0
ALT IF	OFF

4. Connect frequency counter to spectrum analyzer RF Input.

5. Jumper A16TP1 DIODE BIAS to ground. A16TP1 is located on the motherboard through hole in the analyzer left side gusset.

6. Adjust front-panel TUNING control for DVM indication of 0.000 Vdc (fully counterclockwise).

7. Adjust A7R8 (3 GHz) for frequency counter indication of 3.000 GHz ± 1 MHz. (If this adjustment cannot be achieved, factory select resistor A7R3* can be added – if it is not installed – or decreased to provide the proper range. Select a value of 147K ohms for A7R3*, initially, and decrease this value to no less than 56.2K ohms.)

8. Adjust front-panel TUNING control for DVM indication of – 10.000 Vdc.

9. Set A7R75 6 GHz F (fine) to approximately mid-range (R75 is a 20-turn potentiometer).

10. Adjust A7R47 6 GHz C (coarse) for a frequency counter indication of 6.000 GHz ± 2 MHz.

11. Retune front-panel TUNING control for 0.000 Vdc DVM indication and readjust A7R8 3 GHz if necessary for frequency counter indication of 3.000 GHz ± 1 MHz.

12. Tune front-panel TUNING control for – 10.000 Vdc DVM indication.

13. Lightly tap the top edge of the A7 Frequency Control board with the handle of a small screwdriver to seat controls.

14. Adjust A7R75 6 GHz F (fine) for frequency counter indication 6.000 GHz ± 1 MHz.

ADJUSTMENTS

5-25. FIRST CONVERTER ADJUSTMENTS (Cont'd)

Alternate IF First LO Shift Check

15. Press front-panel ALT IF pushbutton IN to activate alternate IF.

16. Verify YTO frequency shift according to Table 5-12.

TABLE 5-12. FIRST LO SHIFT CHECK

FREQUENCY BAND GHz	ALT IF	FREQUENCY COUNTER INDICATION
1 (.01–3)	OFF	Reference (6.000 GHz)
1 (.01–3)	ON	Reference – 15 MHz ± 800 kHz
2 (6–9)	ON	Reference + 15 MHz 5800 kHz
3 (3–9)	ON	Reference – 7.5 MHz 5400 kHz
4 (9–15)	ON	Reference + 7.5 MHz ± 400 kHz
5 (6–15)	ON	Reference – 5 MHz ± 300 kHz
6 (12.1–21)	ON	Reference + 5 MHz 5300 kHz

17. Remove jumper from A19TP1 DIODE BIAS to ground.

FM Driver Sensitivity and Delay Compensation Adjustment

18. Disconnect frequency counter from spectrum analyzer RF Input and connect comb generator to RF Input.

19. Set comb generator for 1 MHz comb teeth.

20. Set spectrum analyzer controls as follows:

FREQ SPAN/DIV ..... 1 MHz
RES BW ..... 30 kHz
TIME/DIV ..... AUTO
FREQUENCY BAND GHz ..... Band 1 (.01 – 3)
REF LEVEL dBm ..... –20
INPUT ATTEN ..... 0 dB
ALT IF ..... OFF
SIG IDENT ..... OFF
Amplitude Scale ..... 10 dB/DIV
TRIGGER ..... FREE RUN

21. Tune front-panel TUNING control for approximately 1.5 GHz indication on front-panel FREQUENCY GHz display.

22. Adjust A7R83 DC (Delay Compensation) until the comb teeth in the left half of the mainframe CRT display have the same approximate spacing as those on the right half.

ADJUSTMENTS

5-25. FIRST CONVERTER ADJUSTMENTS (Cont'd)

23. Adjust front-panel TUNING FINE control to place a comb tooth on the first vertical graticule line of the CRT display.

24. Adjust A7R92 FM to place a comb tooth on the ninth vertical graticule line of the CRT display.

25. Switch to 10 kHz RES BW and adjust A7R83 DC for even spacing of the comb teeth on the first two graticule lines.

26. Readjust TUNING FINE control to place a comb tooth on the first vertical graticule line. Adjust A7R92 FM to place a comb tooth on each of the graticule lines while keeping the first comb tooth aligned using the TUNING FINE control.

27. Repeat steps 25 and 26 to achieve the best span linearity.

NOTE

Trim potentiometer **A7R83** (DC) controls the amount of delay compensation; **A7R96*** controls the time constant of the compensation. If the adjustment of **A7R83** does not result in even comb tooth spacing, **R96*** will have to be re-selected for even spacing.

28. Switch to 30 kHz RES BW. The comb tooth spacing should not change. If there is a shift of the comb teeth, repeat steps 22 through 27 for best compromise in span linearity.

29. Tune to approximately 100 MHz and verify that a comb tooth placed on the first vertical graticule line, using the TUNING FINE control, will align the ninth comb tooth with the ninth vertical graticule line ± 1 minor division.

30. Select the 10 kHz RES BW and verify that a comb tooth on the first vertical graticule line will align the ninth comb tooth with the ninth graticule line ± 1 minor division.

31. Select the 30 kHz RES BW and repeat step 29 for a frequency of approximately 2.5 GHz.

32. Repeat step 30 for a frequency of approximately 2.5 GHz.

33. If necessary, A7R83 (DC) and A7R92 (FM) may be compromise adjusted for best span linearity at the three frequencies indicated.

34. Set comb generator for 100-MHz comb teeth.

35. Adjust front-panel TUNING control for 0.10 GHz indication on FREQUENCY display.

36. Set FREQ SPAN/DIV to 2 MHz.

37. Adjust TUNING to place 100 MHz comb tooth on center graticule line.

ADJUSTMENTS

5-25. FIRST CONVERTER ADJUSTMENTS (Cont'd)

38. Set FREQ SPAN/DIV to 1 MHz. Note position of comb tooth.

39. Adjust A7R81 (MO) to place comb tooth midway between position noted in step 38 and center graticule line.

40. Set FREQ SPAN/DIV to 2 MHz.

41. Adjust TUNING to place comb tooth in center graticule line.

42. Set FREQ SPAN/DIV to 1 MHz. Note displacement of comb tooth from center graticule line.

43. Repeat steps 36 through 42 until displacement of comb tooth is less than 0.2 major division when FREQ SPAN/DIV is switched from 2 MHz to 1 MHz.

ADJUSTMENTS

5-26. SECOND CONVERTER ADJUSTMENTS

REFERENCE:

A3, A4, A5, A6, and A8 Schematics

DESCRIPTION:

First, the Second LO is adjusted for proper frequency using a frequency counter. Next, the signal identifier (SIG ID) and alternate IF (ALT IF) signals are adjusted so that the displayed signal appears in the same location in both regular and alternate IF and the signal identifier is always 1 MHz away from this signal in either regular or alternate IF. Last, the first IF bandpass filter is aligned for a bandpass wide enough to allow for the first LO shift and amplitude characteristics such that there will be a minimal shift in displayed signal amplitude when the analyzer is switched from regular to alternate IF.

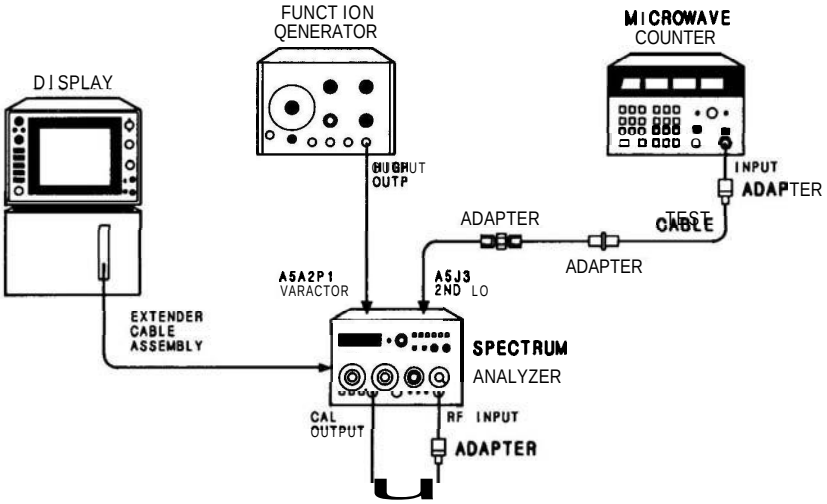

FIGURE 5-12. SECOND CONVERTER ADJUSTMENTS TEST SETUP

EQUIPMENT:

Frequency Counter	HP 5342A
Function Generator	HP 3310A
Test Cable, BNC (m) to SMB (f)	HP 8568-60093
Adapter, BNC (f) to Alligator Clips	HP 8120-1292
Adapter, SMB (m) to SMB (m)	HP 1250-0669
Adapter, SMB (f) to SMB (f)	HP 1250-0672
Adapter, Type N (m) to BNC (f) (2 required)	HP 1250-780
Special Tuning Tool, Allen driver inserted through drilled-out 5/16 inch nut driver	HP 0855-60107
Oscilloscope	HP 1740A
Extender Cable Assembly	HP 5060-0303

ADJUSTMENTS

5-26. SECOND CONVERTER ADJUSTMENTS (Cont'd)

PROCEDURE:

Second LO Preliminary Adjustment

1. Allow one-half hour warm-up time of equipment with analyzer connected to mainframe with extender cable.

2. Connect frequency counter input to A5J3 2nd LO output using the test cable and two SMB adapters.

3. Select Band 1 (.01 – 3) and Alternate IF on spectrum analyzer front-panel by depressing these push buttons.

4. Using the special Allen driver/nut driver tuning tool, adjust A5Z4 2nd LO FREQUENCY for a frequency counter indication of 2671.1 MHz ± 0.5 MHz.

5. Connect spectrum analyzer CAL OUTPUT to RF INPUT and adjust front-panel TUNING controls to center the calibrator signal on the CRT display.

6. Set spectrum analyzer controls as follows:

FREQ SPAN/DIV	1 MHz
RES BW	300 kHz
TIME/DIV	2 mSEC
FREQUENCY BAND GHz	BAND 1 (.01 – 3)
SIG IDENT	OFF
ALT IF	OFF
853A	TRACE A & B STORE BLANK (ANALOG DISPLAY)

7. Depress front-panel SIG IDENT and ALT IF pushbuttons.

8. Turn SIG IDENT off and on while monitoring the display. The signal traces which appear when SIG IDENT is switched on are the signal identifier signals. The others are the alternate IF signals.

9. Adjust TUNING to place one of the signal identifier signals on a graticule line. This will be the reference graticule line.

10. Turn ALT IF off. Adjust A8R34 REG to center the signal identifier signal on the reference graticule line.

11. Turn ALT IF on. Verify that the signal identifier signal appears on reference graticule line. If not, repeat step 10.

12. Adjust A8R40 SIG ID to place the alternate IF signal 1 MHz (1 division) higher than the signal identifier signal.

13. Turn ALT IF off. Adjust A8R39 OFF to center the signal on the same graticule line as the alternate IF signal (1 MHz higher than reference graticule line).

ADJUSTMENTS

5-26. SECOND CONVERTER ADJUSTMENTS (Cont'd)

14. Turn ALT IF on and verify that the two signals do not appear to move.

15. Change spectrum analyzer FREQ SPAN/DIV to 500 kHz.

16. Repeat steps 7 through 14 if necessary to align both signal identifier signals and both alternate IF signals and spaced 1 MHz (2 divisions) apart on the CRT display.

17. Depress front-panel ALT IF pushbutton. Turn SIG IDENT off.

18. Note Second LO frequency on frequency counter.

19. Adjust A5Z4 2nd LO FREQUENCY if necessary for a frequency counter indication of 2671.1 MHz ±0.5 MHz.

20. If second LO frequency is readjusted, recheck second LO shift adjustments, steps 5 through 16.

21. Set spectrum analyzer controls as follows:

FREQ SPAN/DIV	2 MHz
RESBW	3 MHz
REF LEVEL dBm	−10
INPUT ATTEN	10 dB
Amplitude Scale	1 dB/DIV
TIME/DIV	AUTO
FREQUENCY BAND GHz	Band 1 (.01 – 3)
ALT IF	ON
SIG IDENT	OFF

22. Adjust front-panel REF LEVEL dBm and REF LEVEL FINE controls to place signal peak in upper half of CRT display for convenient viewing.

23. Adjust front-panel TUNING control to place signal peak 3.75 divisions to the left of center screen on the CRT.

24. Connect the HIGH output of the function generator to an oscilloscope and adjust function generator output for a 0V to +20V ramp and frequency to 500 Hz.

25. Disconnect the function generator from the oscilloscope and connect it to A5A2TP1 VARACTOR by using the 8120-1292 adapter.

26. The following adjustments refer to aligning the Second Converter after internal repair of the converter. If the entire converter has been replaced, it will probably not be necessary to perform all of the adjustments.

27. Adjustments A5Z1, A5Z2, A5Z3, and A5L2 are used to align the bandpass filter and output match of the Second Converter. Z1 and L2 are used to adjust amplitude and Z2 and Z3 are used to center the response about the center frequency.

ADJUSTMENTS

5-26. SECOND CONVERTER ADJUSTMENTS (Cont'd)

28. The requirements for the converter response are illustrated in Figure 5-13a and are as follows: Bandpass should be at least 17 MHz, 1 dB down. Amplitude of response at 3.75 divisions to the left and 3.75 divisions to the right of center screen should be as near the same as possible. These are the positions of the IF signals for regular and alternate IF. This is illustrated in composite photo Figure 5-13b. These positions should be the same distance from the roll-off point at each end of the response curve.

29. Distance from roll-off points can be checked by centering signal with function generator disconnected and then reconnecting function generator and switching ALT IF on and off. This is illustrated in Figure 5-13c and 5-13d.

30. Adjust A5Z1, Z2, Z3 and L2 to satisfy the requirements of the converter response. If entire converter has been replaced, try adjusting A5Z1 and L2 first. Do not adjust A2 and A3 unless it is necessary to meet requirements. Do not sacrifice amplitude to achieve flatness.

31. When adjustment is complete, disconnect function generator from A5A2TP1, center signal on display, and turn ALT IF on and off while monitoring signal.

32. Amplitude difference between regular and alternate IF should be no more than 0.4 dB.

ADJUSTMENTS

5-26. SECOND CONVERTER ADJUSTMENTS (Cont'd)

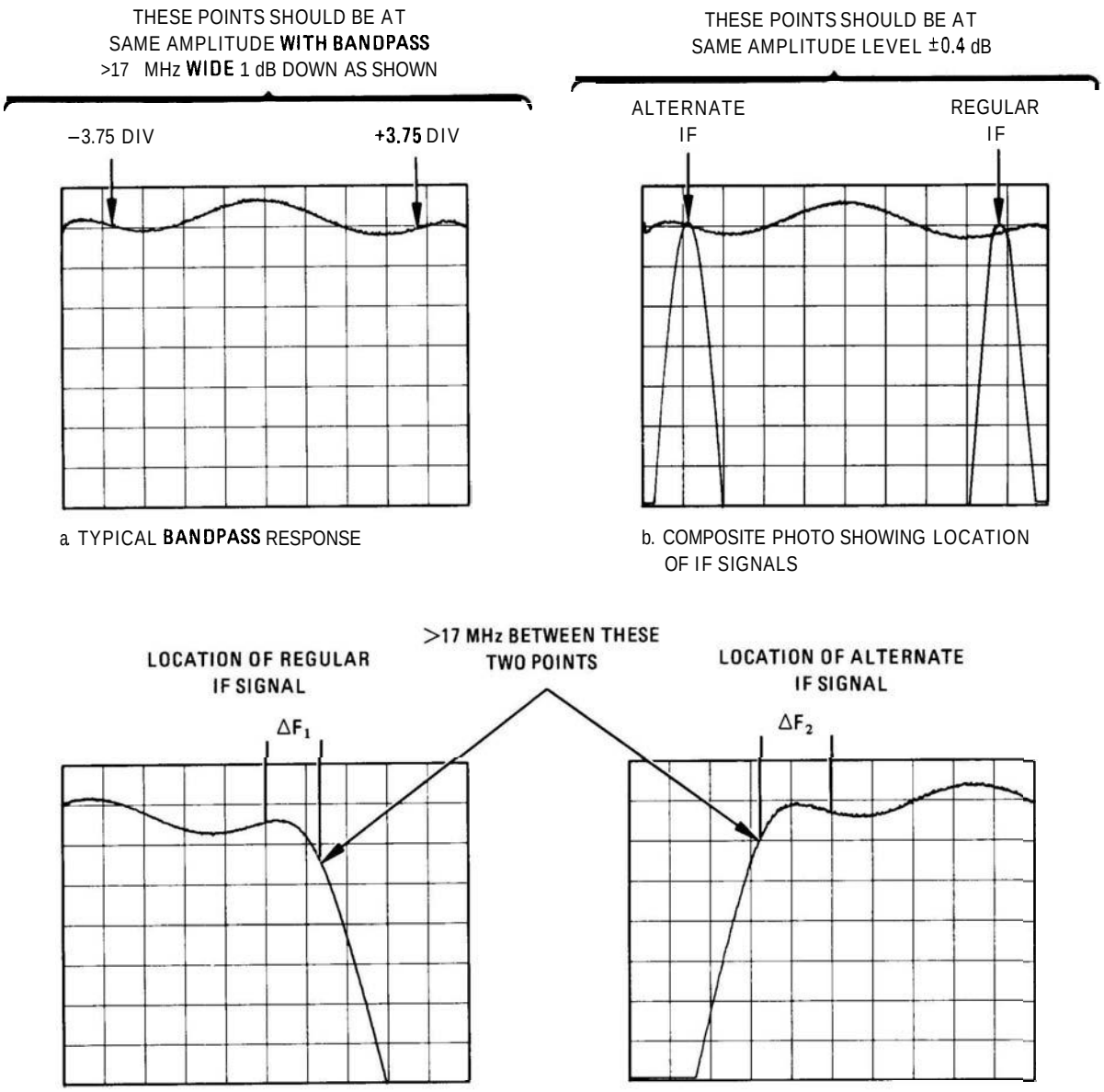

a. TYPICAL BANDPASS RESPONSE

b. COMPOSITE PHOTO SHOWING LOCATION OF IF SIGNALS

c. ROLL-OFF AT HIGH-END OF RESPONSE

d. ROLL-OFF AT LOW-END OF RESPONSE

ΔF_1 AND ΔF_2 MUST BE $\geqslant$1 MHz BUT $\leqslant$4 MHz

ΔF_1 MUST EQUAL ΔF_2 ±0.2 MHz

FIGURE 5-13. FIRST IF BANDPASS FILTER RESPONSE

ADJUSTMENTS

5-27. THIRD CONVERTER ADJUSTMENTS

REFERENCE:

A10 Schematic

DESCRIPTION:

First, the Third LO is adjusted for proper frequency using a frequency counter. Next, the second IF bandpass filter is aligned by injecting a frequency modulated 21.4 MHz signal at the necessary level and monitoring the 21.4 MHz output signal with another spectrum analyzer. The filter is aligned for a bandpass wide enough to accommodate any frequency drift occurring in the RF section of the analyzer and the amplitude necessary to provide the overall gain characteristics required by the analyzer.

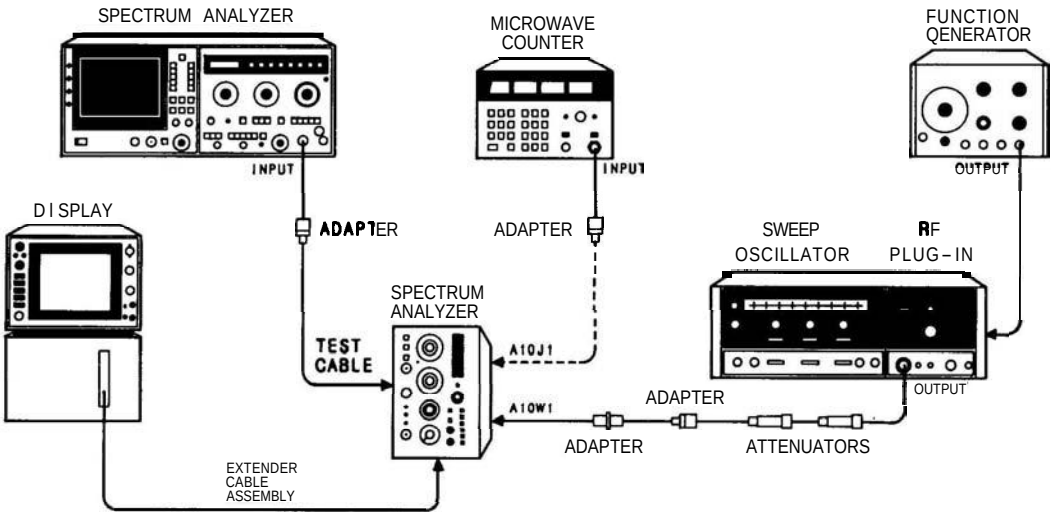

FIGURE 5-14. THIRD CONVERTER ADJUSTMENTS TEST SETUP

EQUIPMENT

Frequency Counter	HP 5342A
Sweep Oscillator	HP 8620C/86222A
Spectrum Analyzer	HP 8569B
Function Generator	HP 3310A
Test Cable, BNC (m) to SMB (f) (2 required)	HP 85680-60093
Adapter, SMC (m) to SMC (m)	HP 1250-0827
Adapter, Type N (m) to BNC (f) (3 required)	HP 1250-0780
20 dB Attenuator	HP 8491B, Option 020
10 dB Attenuator	HP 8491B, Option 010
Test Cable, BNC (m) to SMC (f)	HP 11592-60001
Extender Cable Assembly	HP 5060-0303

ADJUSTMENTS

5-27. THIRD CONVERTER ADJUSTMENTS (Cont'd)

PROCEDURE:

1. Allow one-half hour warmup time of equipment with analyzer connected to mainframe with extender cable.

Third LO Adjustment

2. Connect frequency counter to A10J1 300 MHz output using the BNC to SMB test cable.

3. Adjust A10L12 LO ADJ for frequency counter indication of 300.00 MHz ±0.1 MHz.

Second IF **Bandpass** Filter Alignment

4. Disconnect blue cable A10W1 at second converter output connector A5J2.

5. Set sweep oscillator controls for an output of 321.4 MHz at 0 dBm (measured directly at output of sweep oscillator). Use the frequency counter and spectrum analyzer to set the output frequency and amplitude.

6. Connect output through 10 and 20 dB attenuators to cable disconnected in step 4, using the BNC to SMB test cable and SMB male to SMB male adapter.

7. Place analyzer on right side and connect test cable to Third Converter 21.4 MHz output connector. If connector is not present (some early instruments were not so supplied), it is necessary to solder a coaxial cable to XA10P1 pin 18 and ground (center conductor of coaxial cable to XA10P1 and shield to ground).

8. Connect test cable or soldered cable to 8569B spectrum analyzer input.

9. Set 8569B spectrum analyzer controls as follows:

TUNING	21.4 MHz
RESBW	300 kHz
FREQ SPAN/DIV	1 MHz/DIV
INPUT ATTEN	10 dB
REF LEVEL dBm	– 10 dBm
Amplitude Scale	10 dB LOG
TIME/DIV	1 mSEC/DIV

10. Set HP 8559A RESBW to 1 kHz and TRIGGER to FREE RUN.

11. Center the 21.4 MHz signal on the 8569B spectrum analyzer, adjust reference level to place signal within top division on CRT, then change scale to 1 dB/DIV. Adjust REF LEVEL FINE to place signal peak in upper half of display.

12. Set function generator controls for a 200 Hz triangle wave output and connect to sweep oscillator RF Plug-In rear-panel FM input. Set FM/NORM/PL switch to FM.

ADJUSTMENTS

5-27. THIRD CONVERTER ADJUSTMENTS (Cont'd)

13. Adjust function generator amplitude and frequency for at least 10 MHz deviation (±5 MHz) and an easy-to-view display on the 8569B spectrum analyzer. Refer to Figure 5-15. Increasing the frequency of the function generator will increase the swept frequency range of the sweep oscillator.

14. Adjust second IF bandpass filter adjustments A10C9 through A10C12 for the flattest bandpass response possible at the greatest amplitude possible centered at 21.4 MHz and at least 6 MHz (6 divisions) wide at 1 dB down from the highest point on the response curve. Do not sacrifice large amounts of amplitude for flatness. Some early instruments may display ripple on the response. This ripple should ≤1 dB peak-to-peak. Peak of adjusted response should be at −10 dBm ±2 dB.

NOTE

The output level of the third converter is actually **0 dBm.** Due to the mis-match error (≈**9.5** dB) encountered in this measurement, the level measured will be approximately −10 **dBm.**

15. Refer to Figure 5-15 for example of properly adjusted bandpass response and requirements for response.

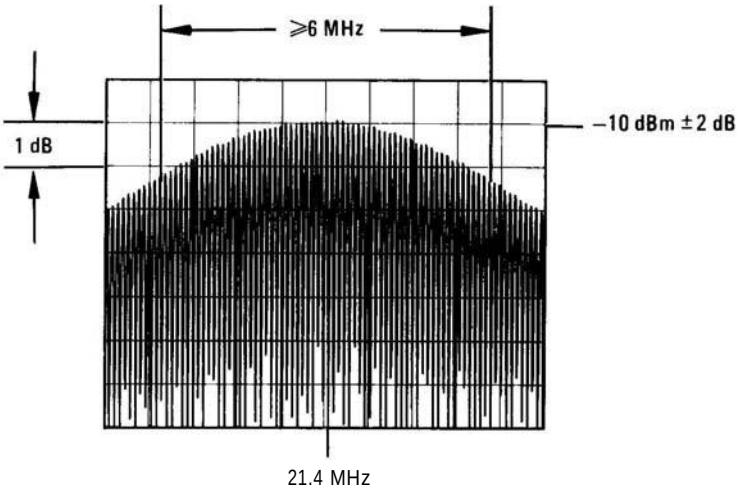

FIGURE 5-15. SECOND IF BANDPASS FILTER RESPONSE

ADJUSTMENTS

5-28. FREQUENCY RESPONSE ADJUSTMENTS

REFERENCE:

A3, A4, A5, A6, and A12 Schematics

NOTE

Perform CAL OUTPUT and REF LEVEL CAL adjustments (5-29) before proceeding with frequency response adjustments.

DESCRIPTION:

Frequency Response (flatness) is adjusted in six parts corresponding to the six harmonic bands of the analyzer. In each band, the analyzer is swept-tuned with a tracking signal source comprising a sweep oscillator and synchronizer. The sweep oscillator is tuned with an external sweep ramp generated by scaling the analyzer's sweep output (AUX D) with a special tuning voltage circuit. This provides synchronization of the sweeps of the two instruments (sweep oscillator and analyzer), thus providing phase lock of the two instruments. Each of the bands is adjusted for optimum flatness and all bands are adjusted for equal amplitudes.

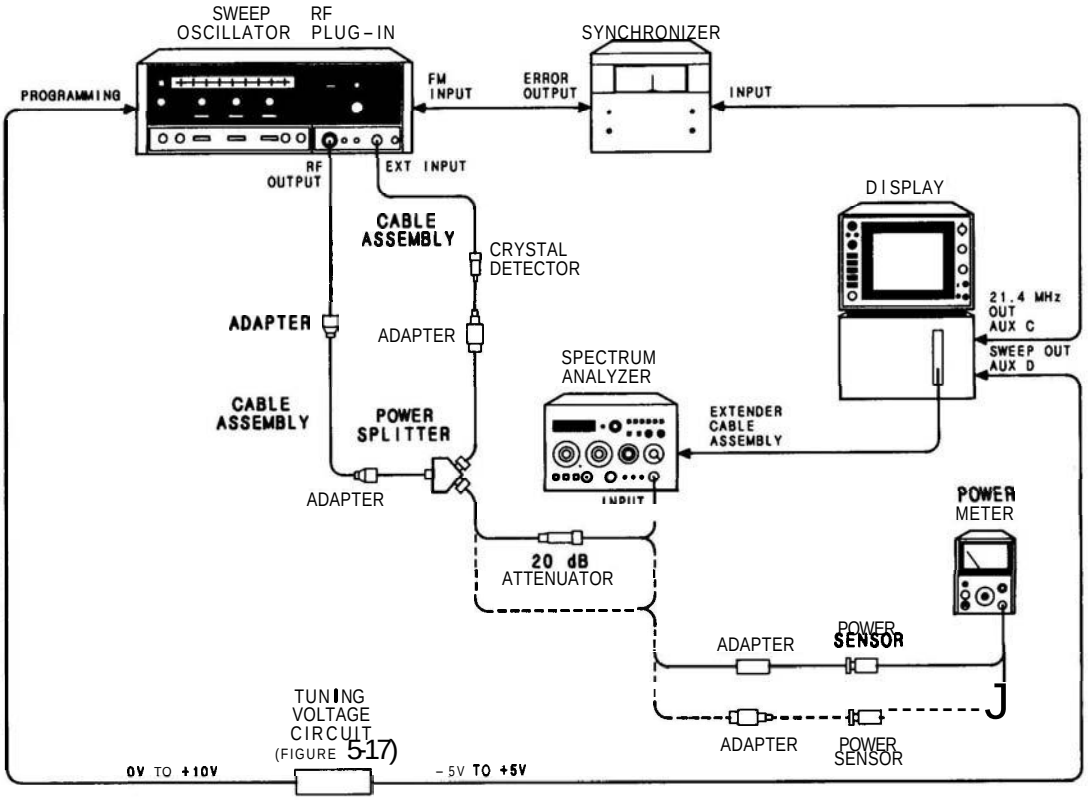

FIGURE 5-16. FREQUENCY RESPONSE ADJUSTMENTS TEST SETUP

ADJUSTMENTS

5-28. FREQUENCY RESPONSE ADJUSTMENTS (Cont'd)

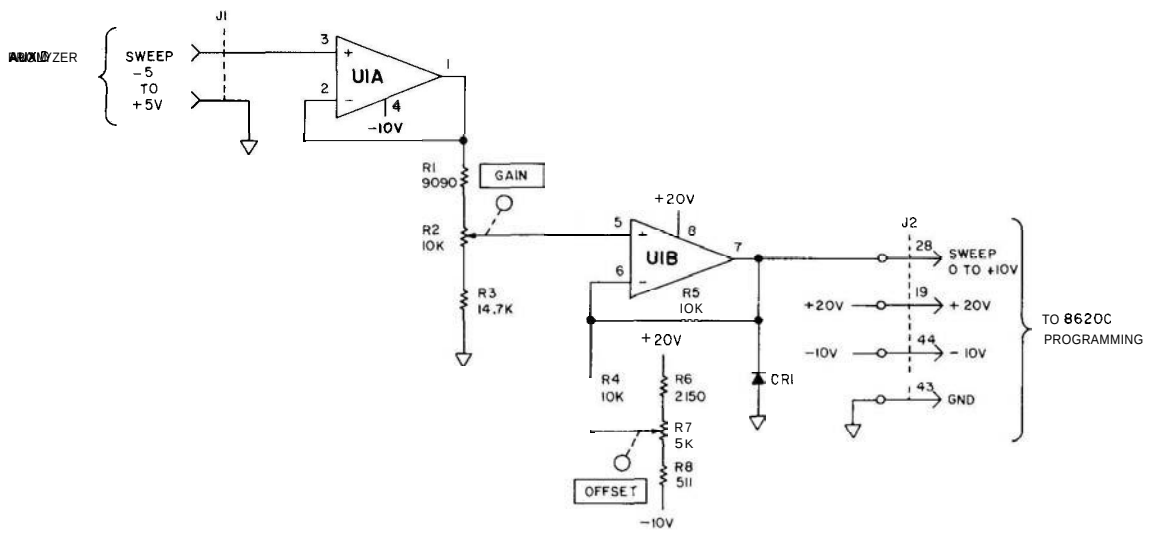

REFERENCE DESIGNATOR	HP PART NUMBER	C D	DESCRIPTION
CR1	1901-0040	1	DIODE-SWITCHING 30V 50 MA 2NS DO-35
J1	1250-0118	3	CONNECTOR-RF BNC FEMALE 50-OHM
J2	1251-0086	6	CONNECTOR-MICRORIBBON 50-PIN MALE
R1	0757-0288	1	RESISTOR 9.09K 1% .125W
R2	2100-3414	2	RESISTOR-VAR CONTROL 10K 20% LIN
R3	0698-3156	2	RESISTOR 14.7K 1% .125W
R4	0757-0442	9	RESISTOR 10K 1% .125W
R5	0757-0442	9	RESISTOR 10K 1% .125W
R6	0698-0084	9	RESISTOR 2.15K 1% .125W
R7	2100-3421	1	RESISTOR-VAR CONTROL 5K 20% LIN
R8	0757-0416	7	RESISTOR 511 1% .125W
U1	1826-0092	3	OP AMP-GENERAL PURPOSE DUAL TO-99

FIGURE 5-17. TUNING VOLTAGE CIRCUIT

ADJUSTMENTS

5-28. FREQUENCY RESPONSE ADJUSTMENTS (Cont'd)

EQUIPMENT:

Sweep Oscillator	HP 8620C
RF Plug-In (.01 – 2.4 GHz)	HP 8622A/B
RF Plug-In (2 – 22 GHz)	HP 86290B-H08
Synchronizer	HP 8709A-H10
Power Meter	HP 435A/B
Power Sensor (.01 – 18 GHz)	HP 8481A
Power Sensor (.05 – 26.5 GHz)	HP 8485A
Crystal Detector (.01 – 26.5 GHz)	HP 33330C
20 dB Attenuator	HP 8491B, Option 020
Tuning Voltage Circuit	Refer to Figure 5-17
Cable, SMA (m) to SMA (m)	HP 8120-1578
Cable, BNC (m) to SMC (f)	HP 11592-60001
Adapter, Type N (m) to SMA (f) (2 required)	HP 1250-1250
Adapter, Type N (f) to SMA (f) (2 required)	HP 1250-1745
Adapter, Type N (f) to Type N (f)	HP 1250-1472
Extender Cable Assembly	HP 5060-0303
Power Splitter	11667A-C16

PROCEDURE:

1. Allow one-half hour warmup time of equipment with analyzer connected to mainframe with extender cable.

2. Connect equipment as shown in Figure 5-16 with power meter/power sensor connected to 20 dB attenuator and HP 86222A/B (.01 – 2.4 GHz plug-in) installed in sweep oscillator mainframe.

3. Set sweep oscillator controls as follows:

   Mainframe:

SWEEP MODE	EXT
MARKERS	OFF
All rear panel switches	OFF

   Plug-in

RF OFF/ON	OFF
ALC	EXT
POWER LEVEL	Fully CCW
FM/NORM/PL (rear-panel)	PL

4. Set synchronizer controls as follows:

POLARITY	–
SENSITIVITY	6 MHz/VOLT

ADJUSTMENTS

5-28. FREQUENCY RESPONSE ADJUSTMENTS (Cont'd)

5. Set spectrum analyzer controls as follows:

REF LEVEL FINE	0 dBm
REF LEVEL dBm	−20
INPUT ATTEN	10 dB
Amplitude Scale	10 dB/DIV
FREQ SPAN/DIV	F (full)
RESOLUTION BW	3 MHz
FREQUENCY BAND GHz	.01 – 3
TIME/DIV	20 msec
TRIGGER	FREE RUN
BLCLIP	OFF
VIDEO FILTER	MIN
ALT IF	OFF
SIG IDENT	OFF
TUNING	2.5 GHz

.01 – 3 **GHz** Adjustment

6. Place sweep oscillator plug-in RF OFF/ON switch to ON.

7. Adjust sweep oscillator controls for a CW output of 2 GHz at – 7 dBm.

8. Disconnect power meter/power sensor and connect 20 dB attenuator directly to analyzer RF INPUT as shown in Figure 5-16.

9. Adjust sweep oscillator controls for full sweep.

10. Adjust Tuning Voltage Circuit GAIN control fully clockwise then adjust OFFSET control to center phase-locked signal on CRT. Refer to Figure 5-18a.

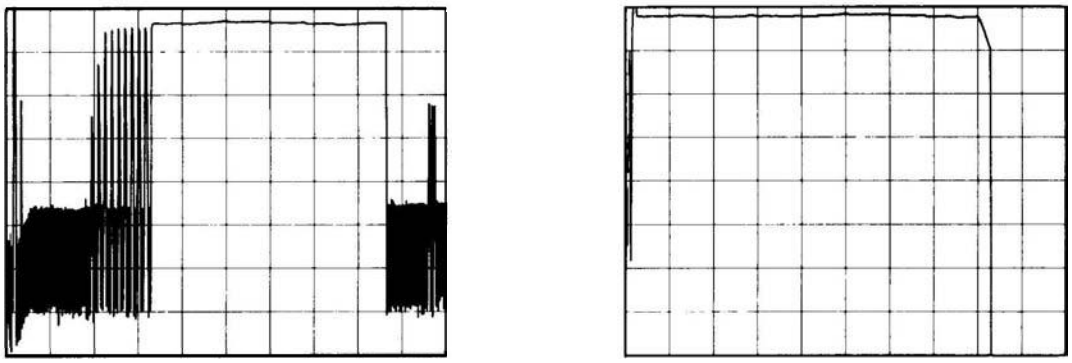

FIGURE 5-18. ILLUSTRATION OF PHASE-LOCKING PROCEDURE

ADJUSTMENTS

5-28. FREQUENCY RESPONSE ADJUSTMENTS (Cont'd)

11. Adjust Tuning Voltage Circuit GAIN control to expand the phase locked display over 8 1/2 divisions on CRT (.01 – 2.4 GHz). Refer to Figure 5-18b. It may be necessary to readjust OFFSET slightly to achieve phase lock over entire range.

12. Optimum phase lock is indicated by a smooth trace over full swept frequency range on CRT and minimum needle movement on synchronizer phase error meter.

13. Place CRT trace in top division of display using analyzer REF LEVEL FINE control.

14. Change spectrum analyzer Amplitude Scale to 1 dB/DIV and adjust REF LEVEL FINE control to place trace in upper half of display.

15. Remove CAUTION label (PC Board) from cover of A12 Step Gain by removing two pozi-drive screws.

16. Adjust A12R72 V1 (bias) for maximum amplitude of trace on CRT.

17. Adjust A12R47 1B (tilt) for best overall flatness of trace on CRT.

NOTE

Remember, you are viewing only a portion (.01 – 2.4 GHz) of Band 1. The remainder of Band 1 may have an effect on this adjustment.

18. Note highest and lowest points on CRT trace for reference. Also note level of trace at 2.1 GHz position on CRT (8th vertical graticule line).

Highest_____ Lowest_____ 2.1 GHz _____

19. Place sweep oscillator LINE switch OFF.

20. Disconnect cables from HP 86222A/B (.01 – 2.4 GHz plug-in) and remove plug-in from sweep oscillator mainframe.

21. Install HP 86290B (2 – 18.6 GHz plug-in) or HP 86290B-H08 (2 – 22 GHz plug-in), if available, in sweep oscillator mainframe and reconnect cables as shown in Figure 5-16 with 20 dB attenuator connected to analyzer RF INPUT.

22. Set RF plug-in controls the same as for the plug-in removed (refer to step 3) and select Band 4 (2 – 18.6 or 2 – 22 GHz) on sweep oscillator mainframe.

23. Place RF plug-in RF OFF/ON switch ON. Change analyzer Amplitude Scale to 10 dB/DIV.

24. Adjust sweep oscillator for swept output from 2 to 3 GHz.

25. Adjust spectrum analyzer TUNING controls for FREQUENCY GHz indication of 2.500 and change FREQ SPAN/DIV to 100 MHz. Make sure RES BW remains at 3 MHz.

ADJUSTMENTS

5-28. FREQUENCY RESPONSE ADJUSTMENTS **(Cont'd)**

26. Adjust Tuning Voltage Circuit GAIN and OFFSET controls to phase lock swept signal from 2 to 3 GHz.

27. Adjust RF plug-in POWER LEVEL control to place trace at approximately –27 dBm on CRT.

28. Change spectrum analyzer Amplitude Scale to 1 dB/DIV.

29. Adjust RF plug-in POWER LEVEL control to place 2.1 GHz position of CRT trace to same level as that noted in step 18.

30. Note flatness of trace from 2 to 3 GHz. Total deviation of trace from 0.1 to 3 GHz should not exceed 2.0 dB.

31. Center trace about the sixth horizontal graticule line on the CRT using analyzer REF LEVEL FINE control. Do not change this setting for remainder of procedure. This will be used as amplitude reference for remaining frequency bands.

NOTE

Be careful during the adjustment of the remaining frequency bands. It is possible to achieve a phase-locked display of a frequency range other than the one selected on the spectrum analyzer. For example, it is possible to achieve a phase-locked display for 6 – 9 **GHz** when 3 – 9 **GHz** has been selected. This can be avoided by paying close attention to synchronizer polarity and RF plug-in band switch points. Figure 5-19 illustrates the typical appearance of each of the bands. Use it for reference.

6 to 9 **GHz** Adjustment

32. Change synchronizer POLARITY to +.

33. Change spectrum analyzer FREQ SPAN/DIV to F (full), Amplitude Scale to 10 dB/DIV, and FREQUENCY BAND GHz to 6 – 9. Set TUNING to above 9 GHz.

34. Adjust sweep oscillator for swept output from 6 to 9 GHz.

35. Adjust Tuning Voltage Circuit GAIN and OFFSET controls to phase lock swept signal from 6 to 9 GHz. Refer to Figure 5-19b.

36. Change spectrum analyzer Amplitude Scale to 1 dB/DIV.

37. Adjust A12R58 2A (offset) and A12R48 2B (tilt) for best overall flatness of trace from 6 to 9 GHz with trace approximately centered about the sixth horizontal graticule line on the CRT.

38. Total deviation of CRT trace from 6 to 9 GHz should not exceed 2.0 dB.

ADJUSTMENTS

5-28. FREQUENCY RESPONSE ADJUSTMENTS (Cont'd)

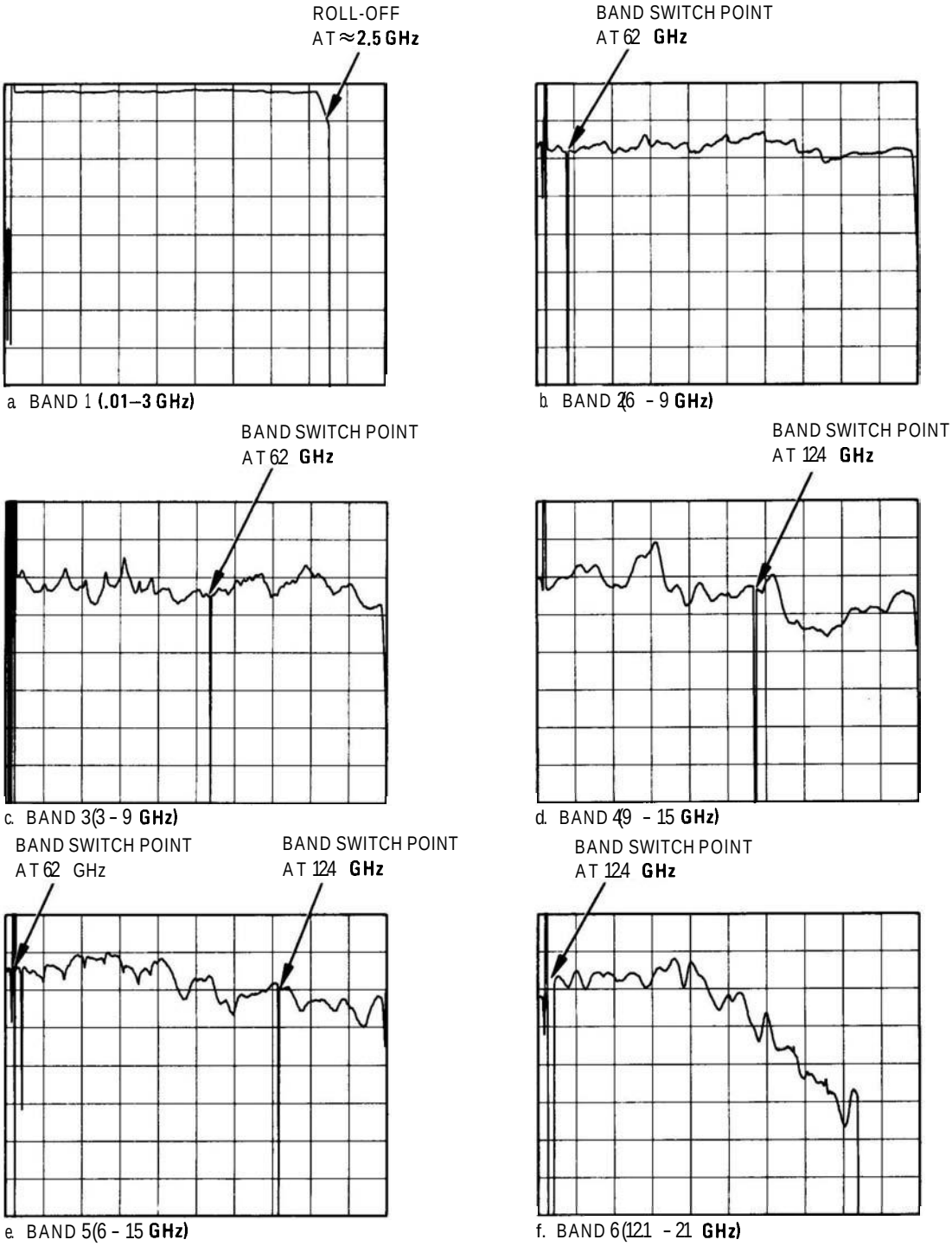

a. BAND 1 (.01–3 GHz)
b. BAND 2 (6 - 9 GHz)
c. BAND 3 (3 - 9 GHz)
d. BAND 4 (9 - 15 GHz)
e. BAND 5 (6 - 15 GHz)
f. BAND 6 (12.1 - 21 GHz)

FIGURE 5-19. TYPICAL PHASE-LOCKED RESPONSE OF EACH FREQUENCY BAND

ADJUSTMENTS

5-28. FREQUENCY RESPONSE ADJUSTMENTS (Cont'd)

3 to 9 **GHz** Adjustment

39. Change synchronizer POLARITY to –.

40. Change spectrum analyzer Amplitude Scale to 10 dB/DIV and FREQUENCY BAND GHz to 3 – 9.

41. Adjust sweep oscillator for swept output from 3 to 9 GHz.

42. Adjust Tuning Voltage Circuit GAIN and OFFSET controls to phase lock swept signal from 3 to 9 GHz. Refer to Figure 5-19c.

43. Change spectrum analyzer Amplitude Scale to 1 dB/DIV.

44. Adjust A12R83 V2 – (bias), A12R59 3A (offset), and A12R49 3B (tilt) for best overall flatness of trace from 3 to 9 GHz with trace approximately centered about the sixth horizontal graticule line on the CRT.

45. Total deviation of trace from 3 to 9 GHz should not exceed 3.0 dB.

9 to 15 **GHz** Adjustment

46. Change synchronizer POLARITY to +.

47. Change spectrum analyzer Amplitude Scale to 10 dB/DIV and FREQUENCY BAND GHz to 9 – 15.

48. Adjust sweep oscillator for swept output from 9 to 15 GHz.

49. Adjust Tuning Voltage Circuit GAIN and OFFSET controls to phase lock swept signal from 9 to 15 GHz. Refer to Figure 5-19d.

50. Change spectrum analyzer Amplitude Scale to 1 dB/DIV.

51. Adjust A12R87 V2 + (bias), A12R60 4A (offset), and A12R51 4B (tilt) for best overall flatness of trace from 9 to 15 GHz with trace approximately centered about the sixth horizontal graticule line on the CRT.

52. Total deviation of trace from 9 to 15 GHz should not exceed 3.6 dB.

6 to 16 **GHz** Adjustment

53. Change synchronizer POLARITY to –.

54. Change spectrum analyzer Amplitude Scale to 10 dB/DIV and FREQUENCY BAND GHz to 6 – 15.

55. Adjust sweep oscillator for swept output from 6 to 15 GHz.

56. Adjust Tuning Voltage Circuit GAIN and OFFSET controls to phase lock swept signal from 6 to 15 GHz. Refer to Figure 5-19e.

ADJUSTMENTS

5-28. FREQUENCY RESPONSE ADJUSTMENTS **(Cont'd)**

57. Change spectrum analyzer Amplitude Scale to 1 dB/DIV.

58. Adjust A12R71 V3 – (bias), A12R61 5A (offset), A12R53 5B (tilt), and A12R54 5C (breakpoint) for best overall flatness of trace from 6 to 15 GHz with trace approximately centered about the sixth horizontal graticule line on the CRT.

59. Total deviation of trace from 6 to 15 GHz should not exceed 4.2 dB.

12.1 to 21 **GHz** Adjustment

NOTE

If an HP **86290B-H08** (2 – 22 **GHz** plug-in) is not available, a standard HP **86290B** (2 – 18.6 **GHz** plug-in) may be used to adjust the spectrum analyzer flatness from 12.1 to 18.6 **GHz** using this procedure.

60. Change synchronizer POLARITY to +.

61. Change spectrum analyzer Amplitude Scale to 10 dB/DIV and FREQUENCY SPAN GHz to 12.1 – 21.

62. Adjust sweep oscillator for swept output from 12 to 18.6 GHz or 12 to 21 GHz, depending on which RF plug-in is used.

63. Adjust Tuning Voltage Circuit GAIN and OFFSET controls to phase-lock swept signal from 12 to 18.6 GHz or 12 to 21 GHz. Refer to Figure 5-19f.

64. Change spectrum analyzer Amplitude Scale to 1 dB/DIV.

65. Adjust A12R70 V3 + (bias), A12R62 6A (offset), A12R55 6B (tilt), and A12R56 6C (breakpoint) for best overall flatness of trace from 12.1 to 18.6 GHz or 12.1 to 21 GHz with trace approximately centered about the sixth horizontal graticule line on the CRT.

66. Total deviation of trace from 12.1 to 18 GHz should not exceed 4.6 dB and from 18 to 21 GHz should not exceed 6.0 dB.

67. If unable to achieve flatness specifications, it may be necessary to plot a characterization curve of the sweep oscillator output from 12 to 21 GHz. This can be done by measuring the power output of the sweep oscillator (at the 20 dB attenuator) every 500 MHz from 12 to 21 GHz using a power meter. The values obtained can then be plotted on the CRT and flatness adjusted to this corrected curve. Total deviation then becomes the difference between the largest positive and largest negative deviation from the plotted curve.

This characterization will require the use of an 18 – 21 GHz thermistor mount and K-Band waveguide adapter in addition to equipment previously used. Recommended equipment is listed under EQUIPMENT in this procedure along with previously used equipment.

ADJUSTMENTS

5-29. CAL OUTPUT AND REF LEVEL CAL ADJUSTMENTS

NOTE

These adjustments should be followed by frequency response adjustments, since adjustment of **A12R57 1A** (offset) will shift the frequency **response** of Band 1 **(.01** – 3 **GHz).**

REFERENCE:

A10 and A12 Schematics

DESCRIPTION:

The 35 MHz CAL OUTPUT signal is adjusted for proper amplitude and frequency using a power meter and frequency counter. Adjustment range of the front-panel REF LEVEL CAL control is set using the CAL OUTPUT signal as a reference.

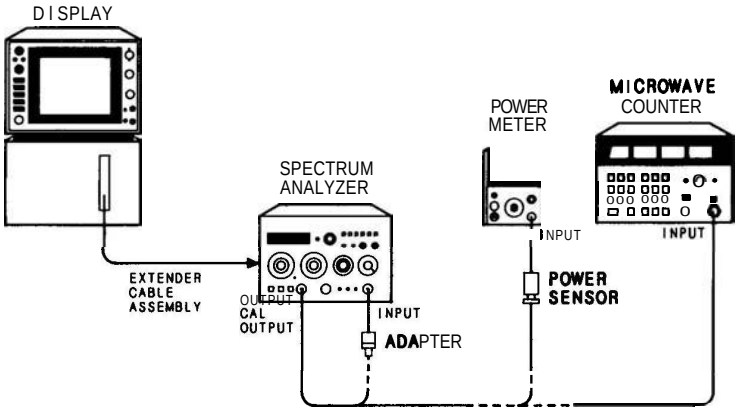

FIGURE 5-20. CAL OUTPUT AND REF LEVEL CAL ADJUSTMENTS TEST SETUP

EQUIPMENT:

Frequency Counter	HP 5342A
Power Meter	HP 432A/435A/B
Power Sensor	HP 8481A
Adapter, Type N (m) to BNC (f)	HP 1250-0780
Extender Cable Assembly	HP 5060-0303

ADJUSTMENTS

5-29. CAL OUTPUT AND REF LEVEL CAL ADJUSTMENTS (Cont'd)

PROCEDURE:

CAL OUTPUT Adjustment

1. Allow one-half hour warmup time of equipment with spectrum analyzer connected to mainframe with extender cable.

2. Connect power meter/power sensor to front-panel CAL OUTPUT connector as shown in Figure 5-20.

3. Place spectrum analyzer on its right side. Adjust A10R13 CAL AMPL for power meter indication of −10.0 dBm ±0.1 dB. A10R13 is accessed through motherboard.

4. Disconnect power meter/power sensor and connect frequency counter to CAL OUTPUT connector.

5. Adjust A10C46 CAL FREQ for frequency counter indication of 35.00 MHz ±0.01 MHz. A10C46 is accessed through motherboard.

6. Repeat steps 2 through 5 until CAL OUTPUT signal is properly adjusted for both amplitude and frequency.

7. Connect CAL OUTPUT to analyzer INPUT.

8. If not already removed, remove CAUTION label (PC Board) from A12 Step Gain.

9. Set spectrum analyzer controls as follows:

Amplitude Scale	10 dB/DIV
REF LEVEL dBm	0
INPUT ATTEN	10 dB
FREQ SPAN/DIV	1 MHz
RESOLUTION BW	1 MHz
TIME/DIV	AUTO
TRIGGER	FREE RUN
FREQUENCY BAND GHz	.01 – 3

10. Center 35 MHz calibration signal on CRT using TUNING controls.

11. Adjust front-panel REF LEVEL CAL fully counterclockwise.

12. Change Amplitude Scale to 1 dB/DIV and adjust REF LEVEL FINE if necessary to place signal peak on first horizontal graticule line above bottom reference line of CRT.

13. Adjust front-panel REF LEVEL CAL to raise signal peak three divisions (3 dB) on CRT (to fourth graticule line above bottom reference line on CRT).

14. Change Amplitude Scale to 10 dB/DIV, REF LEVEL dBm to −10, and set REF LEVEL FINE to 0 dBm.

ADJUSTMENTS

5-29. CAL OUTPUT AND REF LEVEL CAL ADJUSTMENTS (Cont'd)

15. Signal peaks should now be approximately at top graticule line (Reference Level) on CRT.

16. Switch between 10 dB/DIV and LIN while adjusting A12R571A (offset) to place signal peak at same level in both 10 dB/DIV and LIN.

17. Level at which signal peaks are coincident should be at top graticule line (Reference Level). If not, adjust front-panel VERTICAL GAIN to place signal peak at Reference Level line. Be sure VERTICAL POS N is properly adjusted for baseline on bottom graticule line.

18. Replace CAUTION label (PC Board) on A12 Step Gain.

ADJUSTMENTS

5-30. FREQUENCY DISPLAY ADJUSTMENTS

REFERENCE:

A1 and A8 Schematics

DESCRIPTION:

The Digital Panel Meter (DPM) OFFSET and GAIN controls are adjusted for proper FREQUENCY display indication at corresponding tuning voltage (DPMA) levels.

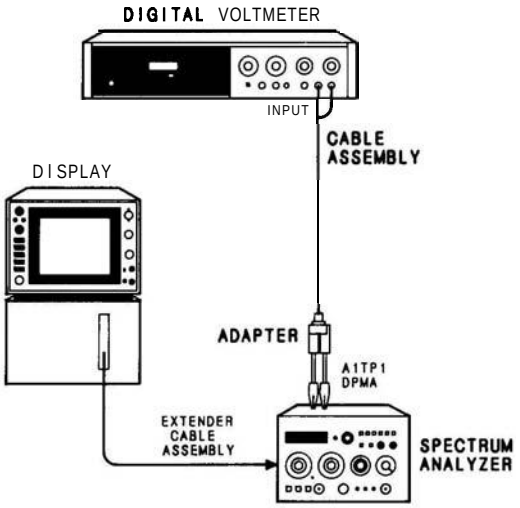

FIGURE 5-21. FREQUENCY DISPLAY ADJUSTMENTS TEST SETUP

EQUIPMENT:

Digital Voltmeter	HP 3456A
Cable, BNC (m) to Banana Plugs	HP 10111A
Extender Cable Assembly	HP 50600303
Adapter, BNC (f) to Alligator Clips	HP 8120-1292

ADJUSTMENTS

5-30. FREQUENCY DISPLAY ADJUSTMENTS (Cont'd)

PROCEDURE:

1. Allow one-half hour warmup time of equipment with analyzer connected to mainframe with extender cable.
2. Jumper A8TP5 DPM to ground.
3. Set front-panel FREQUENCY BAND GHz to Band 1 (.01 – 3).
4. Connect DVM to A1A2TP1 DPMA. A1A2TP1 is located below the board and is accessible through cut-out in left side gusset.
5. Adjust A8R61 DPM ZERO for DVM indication of 0.000 Vdc.
6. Adjust A1A2R29 OFFSET for front-panel FREQUENCY GHz indication of 0.000.
7. Remove jumper from A8TP5 to ground.
8. Select Band 6 (12.1 – 21) on analyzer.
9. Adjust front-panel TUNING control for DVM indication of – 4.000 Vdc.
10. Adjust A1A2R28 GAIN for front-panel FREQUENCY indication of 20.000.

SECTION VI
REPLACEABLE PARTS

6-1. INTRODUCTION

6-2. The replaceable parts list breakdown for each major assembly is located in Section VIII, following the circuit description for the assembly. This section contains information for ordering the replacement parts not listed in Section VIII. Table 6-1 includes a list of reference designations and a list of abbreviations used in the parts list. Table 6-2 lists names and addresses that correspond to the manufacturer code numbers in the parts list. Table 6-3 lists the replaceable parts in alpha-numerical order by reference designation.

6-3. REPLACEABLE PARTS LIST

6-4. Table 6-3, the list of replaceable parts, is organized as follows:

1. Major assemblies and their part numbers.
2. Accessories supplied and their part numbers.
3. Miscellaneous chassis parts and their part numbers.
4. Mechanical chassis parts and their part numbers.

6-5. The following information is listed for each part:

1. The Hewlett-Packard part number.
2. The part number check digit (CD).
3. The total quantity (Qty) in the instrument. This quantity is given only once, at the first appearance of the part in the list.
4. The description of the part.
5. A five-digit code indicating a typical manufacturer of the part.
6. The manufacturer's part number.

6-6. ORDERING INFORMATION

6-7. To order a part listed in the replaceable parts table, quote the Hewlett-Packard part number (with check digit), indicate the quantity required, and address the order to the nearest Hewlett-Packard office. The check digit will ensure accurate and timely processing of your order.

6-8. To order a part that is not listed in the replaceable parts table, include the instrument model number, instrument serial number, the description and function of the part, and the number of parts required. Address the order to the nearest Hewlett-Packard office.

TABLE 6-1. REFERENCE DESIGNATIONS AND ABBREVIATIONS (1 OF 3)

REFERENCE DESIGNATIONS

A ..... Assembly
AT ..... Attenuator, Isolator, Limiter, Termination
B ..... Fan, Motor
BT ..... Battery
C ..... Capacitor
CP ..... Coupler
CR ..... Diode, Diode Thyristor, Step Recovery Diode, Varactor
DC ..... Directional Coupler
DL ..... Delay Line
DS ..... Annunciator, Lamp, Light Emitting Diode (LED), Signaling Device (Visible)
E ..... Miscellaneous Electrical Part
F ..... Fuse
FL ..... Filter
HY ..... Circulator
J ..... Electrical Connector (Stationary Portion), Jack
K ..... Relay
L ..... Coil, Inductor
M ..... Meter
MP ..... Miscellaneous Mechanical Part
P ..... Electrical Connector (Movable Portion), Plug
Q ..... Silicon Controlled Rectifier (SCR), Transistor, Triode Thyristor
R ..... Resistor
RT ..... Thermistor
S ..... Switch
T ..... Transformer
TB ..... Terminal Board
TC ..... Thermocouple
TP ..... Test Point
U ..... Integrated Circuit, Microcircuit
V ..... Electron Tube
VR ..... Breakdown Diode (Zener), Voltage Regulator
W ..... Cable, Wire, Jumper
X ..... Socket
Y ..... Crystal Unit (Piezoelectric, Quartz)
Z ..... Tuned Cavity, Tuned Circuit

ABBREVIATIONS

A

A ..... Across Flats, Acrylic, Air (Dry Method), Ampere
ADJ ..... Adjust, Adjustment
ANSI ..... American National Standards Institute (formerly USASI-ASA)
ASSY ..... Assembly
AWG ..... American Wire Gage

B

BCD ..... Binary Coded Decimal
BD ..... Board, Bundle
BE-CU ..... Beryllium Copper
BNC ..... Type of Connector
BRG ..... Bearing, Boring
BRS ..... Brass
BSC ..... Basic
BTN ..... Button

C

C ..... Capacitance, Capacitor, Center Tapped, Cermet, Cold, Compression
CCP ..... Carbon Composition Plastic
CD ..... Cadmium, Card, Cord
CER ..... Ceramic
CHAM ..... Chamfer
CHAR ..... Character, Characteristic, Charcoal
CMOS ..... Complementary Metal Oxide Semiconductor
CNDCT ..... Conducting, Conductive, Conductivity, Conductor
CONT ..... Contact, Continuous, Control, Controller
CONV ..... Converter
CPRSN ..... Compression
CUP-PT ..... Cup Point
CW ..... Clockwise, Continuous Wave

D

D ..... Deep, Depletion, Depth, Diameter, Direct Current
DA ..... Darlington
DAP-GL ..... Diallyl Phthalate Glass
DBL ..... Double
DCDR ..... Decoder
DEG ..... Degree
D-HOLE ..... D-Shaped Hole
DIA ..... Diameter
DIP ..... Dual In-Line Package
DIP-SLDR ..... Dip Solder
D-MODE ..... Depletion Mode
DO ..... Package Type Designation
DP ..... Deep, Depth, Diametric Pitch, Dip
DP3T ..... Double Pole Three Throw
DPDT ..... Double Pole Double Throw
DWL ..... Dowel

E

E-R ..... E-Ring
EXT ..... Extended, Extension, External, Extinguish

F

F ..... Fahrenheit, Farad, Female, Film (Resistor), Fixed, Flange, Frequency
FC ..... Carbon Film/Composition, Edge of Cutoff Frequency, Face
FDTHRU ..... Feed Through
FEM ..... Female
FIL-HD ..... Fillister Head
FL ..... Flash, Flat, Fluid
FLAT-PT ..... Flat Point
FR ..... Front
FREQ ..... Frequency
FT ..... Current Gain Bandwidth Product (Transition Frequency), Feet, Foot
FXD ..... Fixed

G

GEN ..... General, Generator
GND ..... Ground
GP ..... General Purpose, Group

H

H ..... Henry, High
HDW ..... Hardware
HEX ..... Hexadecimal, Hexagon, Hexagonal
HLCL ..... Helical
HP ..... Hewlett-Packard Company, High Pass

I

IC ..... Collector Current, Integrated Circuit
ID ..... Identification, Inside Diameter
IF ..... Forward Current, Intermediate Frequency
IN ..... Inch
INCL ..... Including
INT ..... Integral, Intensity, Internal

TABLE 6-1. REFERENCE DESIGNATIONS AND ABBREVIATIONS (2 OF 3)

J

J-FET ..... Junction Field Effect Transistor
JFET ..... Junction Field Effect Transistor

K

K ..... Kelvin, Key, Kilo, Potassium
KNRLD ..... Knurled
KVDC ..... Kilovolts Direct Current

L

LED ..... Light Emitting Diode
LG ..... Length, Long
LIN ..... Linear, Linearity
LK ..... Link, Lock
LKG ..... Leakage, Locking
LUM ..... Luminous

M

M ..... Male, Maximum, Mega, Mil, Milli, Mode
MA ..... Milliampere
MACH ..... Machined
MAX ..... Maximum
MC ..... Molded Carbon Composition
MET ..... Metal, Metallized
MHZ ..... Megahertz
MINTR ..... Miniature
MIT ..... Miter
MLD ..... Mold, Molded
MM ..... Magnetized Material. Millimeter
MOM ..... Momentary
MTG ..... Mounting
MTLC ..... Metallic
MW ..... Milliwatt

N

N ..... Nano, None
N-CHAN ..... N-Channel
NH ..... Nanohenry
NM ..... Nanometer, Nonmetallic
NO ..... Normally Open, Number
NOM ..... Nominal
NPN ..... Negative Positive Negative (Transistor)
NS ..... Nanosecond, Non-Shorting, Nose
NUM ..... Numeric
NYL ..... Nylon (Polyamide)

O

OA ..... Over-All
OD ..... Outside Diameter
OPAMP ..... Operational Amplifier
OPT ..... Optical, Option, Optional

P

PA ..... Picoampere, Power Amplifier
PAN-HD ..... Pan Head
PAR ..... Parallel, Parity
PB ..... Lead (Metal), Pushbutton
PC ..... Printed Circuit
PCB ..... Printed Circuit Board
P-CHAN ..... P-Channel
PD ..... Pad, Power Dissipation
PF ..... Picofarad, Power Factor
PKG ..... Package
PLSTC ..... Plastic
PNL ..... Panel
PNP ..... Positive Negative Positive (Transistor)
POLYC ..... Polycarbonate
POLYE ..... Polyester
POT ..... Potentiometer
POZI ..... Pozidriv Recess
PREC ..... Precision
PRP ..... Purple, Purpose
PSTN ..... Piston
PT ..... Part, Point, Pulse Time
PW ..... Pulse Width

Q

Q ..... Figure of Merit

R

R ..... Range, Red Resistance, Resistor, Right, Ring
REF ..... Reference
RES ..... Resistance, Resistor
RF ..... Radio Frequency
RGD ..... Rigid
RND ..... Round
RR ..... Rear
RVT ..... Rivet, Riveted

S

SAWR ..... Surface Acoustic Wave Resonator
SEG ..... Segment
SGL ..... Single
SI ..... Silicon, Square Inch
SL ..... Slide, Slow
SLT ..... Slot, Slotted
SMA ..... Subminiature A Type (Threaded Connector)
SMB ..... Subminiature B Type (Slip-On Connector
SMC ..... Subminiature C Type (Threaded Connector)
SPCG ..... Spacing
SPDT ..... Single Pole Double Throw
SPST ..... Single Pole Single Throw
SQ ..... Square
SST ..... Stainless Steel
STL ..... Steel
SUBMIN ..... Subminiature
SZ ..... Size

T

T ..... Teeth, Temperature, Thickness, Time, Timed, Tooth, Typical
TA ..... Ambient Temperature, Tantalum
TC ..... Temperature Coefficient
THD ..... Thread, Threaded
THK ..... Thick
TO ..... Package Type Designation
TPG ..... Tapping
TR-HD ..... Truss Head
TRMR ..... Trimmer
TRN ..... Turn, Turns
TRSN ..... Torsion

U

UCD ..... Microcandela
UF ..... Microfarad
UH ..... Microhenry
UL ..... Microliter, Underwriters' Laboratories, Inc.
UNHDND ..... Unhardened

V

V ..... Variable, Violet, Volt, Voltage
VAC ..... Vacuum, Volts Alternating Current
VAR ..... Variable
VDC ..... Volts, Direct Current

W

W ..... Watt, Wattage White, Wide. Width
W/SW ..... With Switch
WW ..... Wire Wound

X

X ..... By (Used With Dimensions), Reactance

Y

YIG ..... Yttrium-Iron-Garnet

Z

ZNR ..... Zener

TABLE 6-1. REFERENCE DESIGNATIONS AND ABBREVIATIONS (3 OF 3)

MULTIPLIERS					
Abbreviation	Prefix	Multiple	Abbreviation	Prefix	Multiple
T	tera	10^{12}	m	milli	10^{-3}
G	giga	10^{9}	μ	micro	10^{-6}
M	mega	10^{6}	n	nano	10^{-9}
k	kilo	10^{3}	P	pico	10^{-12}
da	deka	10	f	femto	10^{-15}
d	deci	10^{-1}	a	atto	10^{-18}
c	centi	10^{-2}			

TABLE G-2. MANUFACTURERS CODE LIST

Mfr. No.	Manufacturer Name	Address	Zip Code
01121	ALLEN-BRADLEY CO	MILWAUKEE, WI	53204
01295	TEXAS INSTR INC SEMICOND CMPNT DIV	DALLAS, TX	75222
02111	SPECTROLELECTRONICS CORP	CITY OF IND, CA	91745
02660	BUNKER RAMO CORP AMPHENOL CONN DIV	BROADVILLE, IL	60153
02768	ILLINOIS TOOL WORKS INC FASTEX DIV	DES PLAINES, IL	60016
03888	K D I PYROFILM CORP	WHIPPANY, NJ	07981
04713	MOTOROLA SEMICONDUCTOR PRODUCTS	PHOENIX, AZ	85008
06383	PANDUIT CORP	TINLEY PARK, IL	60477
06665	PRECISION MONOLITHICS INC	SANTA CLARA, CA	95050
07088	KELVIN ELECTRIC CO	VAN NWS, CA	91401
07263	FAIRCHILD SEMICONDUCTOR DIV	MOUNTAIN VIEW, CA	94042
11236	CTS OF BERNE INC	BERNE, IN	46711
17856	SILICONIX INC	SANTA CLARA, CA	95054
19701	MEPCO/ELECTRA CORP	MINERAL WELLS, TX	76067
20940	MICRO-OHM CORP	EL MONTE, CA	91731
24046	TRANSITRON ELECTRONIC CORP	WAKEFIELD, MA	01880
24546	CORNING GLASS WORKS (BRADFORD)	BRADFORD, PA	16701
27014	NATIONAL SEMICONDUCTOR CORP	SANTA CLARA, CA	95051
28480	HEWLETT-PACKARD CO CORPORATE HQ	PALO ALTO, CA	94304
3L585	RCA CORP SOLID STATE DIV	SOMERVILLE, NJ	
30161	AAVID ENGINEERING INC	LACONIA, NH	03246
30983	MEPCO/ELECTRA CORP	SAN DIEGO, CA	92121
32997	BOURNS INC TRIMPOT PROD DIV	RIVERSIDE, CA	92507
33095	SPECTRUM CONTROL INC	FAIRVIEW, PA	16415
37942	MALLORY P R AND CO INC	INDIANAPOLIS, IN	46206
52063	EXAR INTEGRATED SYSTEMS INC	SUNNYVALE, CA	94086
52763	STETTNER ELECTRONICS INC	CHATTANOOGA, TN	13035
56289	SPRAGUE ELECTRIC CO	NORTH ADAMS, MA	01247
71041	BOSTON GEAR WKS DIV OF NA ROCKWELL	QUINCY, MA	02171
72136	ELECTROMOTIVE CORP	FLORENCE, SC	06226
72982	ERIE TECHNOLOGICAL PRODUCTS INC	ERIE, PA	16512
73138	BECKMAN INSTRUMENTS INC HELIPOT DIV	FULLERTON, CA	92634
74970	JOHNSON E F CO	WASECA, MN	56093
78707	TEK BEARING CO INC	NEW YORK, NY	10013

TABLE 6-3. REPLACEABLE PARTS

Reference Designator	HP Part Number	C D	Qty	Description	Mfr. Code	Mfr. Part Number
A1				DIGITAL PANEL METER ASSEMBLY		
A1A1	08559-60079	5	1	DPM DISPLAY ASSEMBLY	28480	08559-60079
A1A2	08559-60078	4	1	DPM DRIVER ASSEMBLY	28480	08559-60078
A2	08559-60065	9	1	FRONT SWITCH ASSEMBLY	28480	08559-60065
A2A1	08559-60069	3	1	FRONT SWITCHBOARD ASSEMBLY	28480	08559-60069
A3	5086-7362	8	1	INPUT ATTENUATOR ASSEMBLY	28480	5086-7362
A4	5086-7302	0	1	FIRST MIXER ASSEMBLY	28480	5086-7302
A5	08559-60082	0	1	SECOND CONVERTER ASSEMBLY	28480	08559-60082
A6	5086-7329	1	1	YIG OSCILLATOR ASSEMBLY	28480	5086-7329
A7	08559-60077	3	1	FREQUENCY CONTROL ASSEMBLY	28480	08559-60077
A8	08559-60075	1	1	MARKER ASSEMBLY	28480	08559-60075
A9	08559-60083	1	1	SWEEP GENERATOR/BANDWIDTH CONTROL ASSEMBLY	28480	08559-60083
A10	08559-60080	8	1	THIRD CONVERTER ASSEMBLY	28480	08559-60080
A11	08559-60058	0	1	BANDWIDTH FILTER NO. 1 ASSEMBLY	28480	08559-60058
A12	08559-60026	2	1	STEP GAIN ASSEMBLY	28480	08559-60026
A13	08559-60058	0	1	BANDWIDTH FILTER NO. 2 ASSEMBLY	28480	08559-60058
A14	5061-5411	2	1	LOG AMPLIFIER ASSEMBLY	28480	5061-5411
A15	08559-60029	5	1	VERTICAL DRIVER/BLANKING ASSEMBLY	28480	08559-60029
A16	08559-60076	2	1	MOTHERBOARD ASSEMBLY	28480	08559-60076

TABLE 6-3. REPLACEABLE PARTS

Reference Designator	HP Part Number	C D	Qty	Description	Mfr. Code	Mfr. Part Number
				ACCESSORIES SUPPLIED		
	08558-60131	9	1	SIDE STOP KIT	28480	08558-60131
	1250-0780	5	1	ADAPTER, TYPE N MALE TO BNC FEMALE	28480	1250-0780
	5020-8565	7	1	CRT-OVERLAY, HP 180 SERIES DISPLAYS	28480	5020-8565
	5020-8566	8	1	CRT-OVERLAY. HP 181 SERIES DISPLAYS	28480	5020-8566
	5020-8567	9	1	CRT-OVERLAY. HP 182 SERIES DISPLAYS	28480	5020-8567
	00853-90010	8	1	ECONOMY S.A. OPERATION BOOKLET	28480	00853-90010

TABLE 6-3. REPLACEABLE PARTS

Reference Designator	HP Part Number	C D	Qty	Description	Mfr. Code	Mfr. Part Number
				MISCELLANEOUS CHASSIS PARTS		
				ELECTRICAL		
C1	0180-2144	9	1	CAP (MOUNTED ON REAR PANEL)	28480	0180-2144
C2	0180-2217	7	1	CAP (MOUNTED ON REAR PANEL)	28480	0180-2217
W1	08559-20045	1	1	CABLE ASSEMBLY, RF INPUT TO ATTENUATOR	28480	08559-20045
W2	08559-20046	2	1	CABLE ASSEMBLY, ATTEN TO FIRST MIXER	28480	08559-20046
W3	08559-20081	5	1	CABLE ASSEMBLY, YTO TO FIRST MIXER	28480	08559-20081
W4	08559-60045	3	5	CABLE ASSEMBLY, CAL OUTPUT	28480	08559-60045
W5	08557-60045	3	1	CABLE ASSEMBLY, VERT OUT	28480	08557-60045
				MECHANICAL		
	7120-4559	5	2	LABEL. WARNING (ONE INSIDE REAR PANEL AND ONE ON A16)	28480	7120-4559

Reference Designator	HP Part Number	C D	Qty	Description	Mfr. Code	Mfr. Part Number
1	08559-00030	2	1	PANEL, FRONT	28480	08559-00030
2	08559-00038	0	1	GUSSET, LEFT SIDE	28480	08559-00038
3	08559-00037	9	1	GUSSET, RIGHT SIDE	28480	08559-00037
4	08559-00003	9	1	PANEL, REAR	28480	08559-00003
5	5061-5426	9	1	RAIL. GUIDE TOP	28480	5061-5426
6	08559-20017	7	1	EXTRUSION, CIRCUIT ENCLOSURE, TAPPED	28480	08559-20017
7	08559-20015	5	1	EXTRUSION. END PLATE ENCLOSURE	28480	08559-20015
8	08559-20014	4	1	EXTRUSION, CIRCUIT ENCLOSURE, TAPPED	28480	08559-20014
9	08559-20016	6	2	EXTRUSION, CIRCUIT ENCLOSURE	28480	08559-20016
10	08559-20001	9	1	WINDOW, FREQ. DISPLAY	28480	08559-20001
11	5021-3254	3	1	RAIL, GUIDE BOTTOM	28480	5021-3254
12	08557-60045	3	1	CABLE ASSY (W5) VERTICAL OUTPUT	28480	08557-60045
13	2200-0165	6	2	SCREW. MACH 4-40.25 IN LG 82 DEG	28480	2200-0165
14	2360-0194	9	4	SCREW, MACH 6-32.312 IN LG FL-HD-POZI	28480	2360-0194
15	2360-0192	7	4	SCREW, MACH 6-32 .25 IN LG FL-HD-POZI	28480	2360-0192
16	2360-0201	9	2	SCREW. MACH 6-32 .5 IN LG PAN-HD-POZI	28480	2360-0201
17	0624-0099	1	80	SCREW. TPG 4-40.375 IN LG PAN-HD-POZI	28480	0624-0099
18	2200-0103	2	14	SCREW, MACH 4-40.25 IN LG PAN-HD-POZI	28480	2200-0103
19	2200-0170	3	1	SCREW. MACH 4-40 .625 IN LG 82 DEG	28480	2200-0170
20	0380-0005	1	1	SPACER, RND.312 IN LG .18-IN-ID	28480	0380-0005
21	2260-0003	7	1	NUT. HEX PLSTC LKG 4-40 THD .141 IN THK	28480	2260-0003
22	2200-0164	5	2	SCREW. MACH 4-40 .188 IN LG UNCT 82 DEG	28480	2200-0164
23	2200-0769	6	3	SCREW, MACH 4-40 .438 IN LG PAN-HD-POZI	28480	2200-0769
24	08559-00006	2	1	COVER. THIRD CONVERTER	28480	08559-00006
25	08559-00007	3	1	COVER. BANDWIDTH FILTER NO. 1	28480	08559-00007
26	08559-00008	4	1	COVER, STEP GAIN	28480	08559-00008
27	08559-00009	5	1	COVER, BANDWIDTH FILTER NO. 2	28480	08559-00009
28	08559-00027	7	1	COVER, LOG AMP	28480	08559-00027
29	3050-0105	6	4	WASHER. FL-MTLC NO. 4 .125 IN ID	28480	3050-0105
30	2420-0001	5	2	NUT. HEX-W/LKWR 6-32 THD .109 IN THK	28480	2420-0001
31	3050-0082	8	6	WASHER. FIBER	28480	3050-0082
32	2190-0104	0	1	WASHER. LK INTL 7/16 IN .439 IN ID	28480	2190-0104
33	2950-0132	6	1	NUT. HEX DBL-CHAM 7/16 -28 THD .125 IN THK	28480	2950-0132
34	0370-0606	7	11	BEZEL, PB ,330 IN SQ: JADE GRAY	28480	0370-0606
36	5040-8819	6	1	PUSHBUTTON, SQUARE: WILLOW GREEN	28480	5040-8819
37	08565-40011	1	1	POINTER, INPUT ATTENUATOR	28480	08565-40011
38	1460-0532	0	1	SPRING. CONICAL	28480	1460-0532
39	08558-60167	1	1	KNOB ASSY, REFERENCE LEVEL	28480	08558-60167
40	08565-00043	5	1	INDEX DISK, REFERENCE LEVEL	28480	08565-00043
41	0510-0089	8	1	RETAINER, RING EXT .188 IN DIA, BE CU	28480	0510-0089
42	08565-60047	5	1	KNOB ASSY, REF LEVEL FINE	28480	08565-60047
43	08559-20052	0	1	KNOB ASSV, RESOLUTION BW	28480	08559-20052
44	08559-20053	1	1	KNOB ASSY. FREQ SPAN/DIV	28480	08559-20053
45	0370-3060	3	1	KNOB, LOCK	28480	0370-3060
46	08559-60002	4	1	RF INPUT ASSY	28480	08559-60002
47	08559-20045	1	1	CABLE. RF INPUT	28480	08559-20045

FIGURE 6-1. MECHANICAL CHASSIS PARTS (1 OF 2)

Reference Designator	HP Part Number	C D	Qty	Description	Mfr. Code	Mfr. Part Number
48	0370-3021	6	1	KNOB ASSY, MANUAL SWEEP	28480	0370-3021
49	08559-20051	9	1	KNOB ASSY, SWEEP TIME/DIV	28480	08559-20051
50	08559-20050	8	1	KNOB ASSY, SWEEP TRIGGER	28480	08559-20050
51	0370-3006	7	1	KNOB ASSY, FINE TUNE	28480	0370-3006
52	0370-3004	5	1	KNOB ASSY, COARSE TUNE	28480	0370-3004
53	08565-60170	5	2	KNOB, BASELINE CLIP/VIDEO FILTER	28480	08565-60170
54	2190-0390	6	1	WASHER, FL NM 1/4 IN .26 IN ID .562 IN OD	28480	2190-0390
55	2950-0001	8	1	NUT, HEX DBL CHAM 3/8-32 THD .094 IN THK	28480	2950-0001
56	2190-0016	3	1	WASHER, LK INTL T 3/8 IN .377 IN ID	28480	2190-0016
57	08558-00006	1	1	INSULATOR, REAR (HELD WITH DOUBLESIDED ADHESIVE FOAM TO 7)	28480	08558-00006
58	86701-40001	9	2	EXTRACTOR, PC BOARD	28480	86701-40001
59	08559-20044	0	1	PLATE, CAUTION	28480	08559-20044
60	0510-0005	8	1	RTNR-R .250 IN ID	28480	0510-0005
61	3050-0017	9	4	WSHR-FL .260 IN ID	28480	3050-0017
62	3050-0161	4	2	WSHR-SP .265 IN ID	28480	3050-0161
63	0590-1251	6	1	NUT-SPCLY 15/32-32 THD .1 IN THK .562 WD	28480	0590-1251
64	6960-0016	0	1	PLUG-HOLE .125 IN ID	28480	6960-0016
65	0380-0034	6	1	SPACER, RND .312 IN LG .118 IN ID	28480	0380-0034
66	2200-0101	0	2	SCREW, MACH 4-40 .18 IN LG PAN-HD-POZI	28480	2200-0101
67	2200-0061	1	20	SCREW, MACH 4-40 .25 IN LG SLOT HD	28480	2200-0061
68	2510-0278	9	2	SCREW, MACH 8-32 .125 IN LG NYLON	28480	2510-0278
69	2360-0113	2	1	SCREW, MACH 6-32 .312 IN LG PAN-HD-POZI	28480	2360-0113
70	3050-0929	2	1	WASHER, FL NM 1/4 IN .26 IN ID .562 IN OD	28480	3050-0929
71	0360-0269	7	1	TERMINAL-SLDR LUG LK-MTG FOR-#8-SCR	28480	0360-0269
72	2200-0141	8	2	SCREW, MACH 4-40 .312 IN LG PAN-HD-POZI	28480	2200-0141
73	2260-0009	3	2	NUT-HEX-W/LKWR 4-40 THD .094 IN THK	28480	2260-0009
74	0360-1669	3	1	TERMINAL STRIP 3-TERM PHEN 1.13-IN-L	28480	0360-1669
75	1400-0031	8	1	CLAMP-CABLE .375-DIA .5-WD NYL	28480	1400-0031
76	2200-0145	2	1	SCREW-MACH 4-40 .438-IN-LG PAN-HD-POZI	28480	2200-0145
77	2260-0001	5	1	NUT-HEX-DBL-CHAM 4-40 THD .094-IN-THK	28480	2260-0001
78	3050-0066	8	1	WASHER-FL MTLC NO. 6 .147-IN-ID	28480	3050-0066
79	2190-0018	5	1	WAHSER-LK HLCL NO. 6 .141-IN-ID	28480	2190-0018

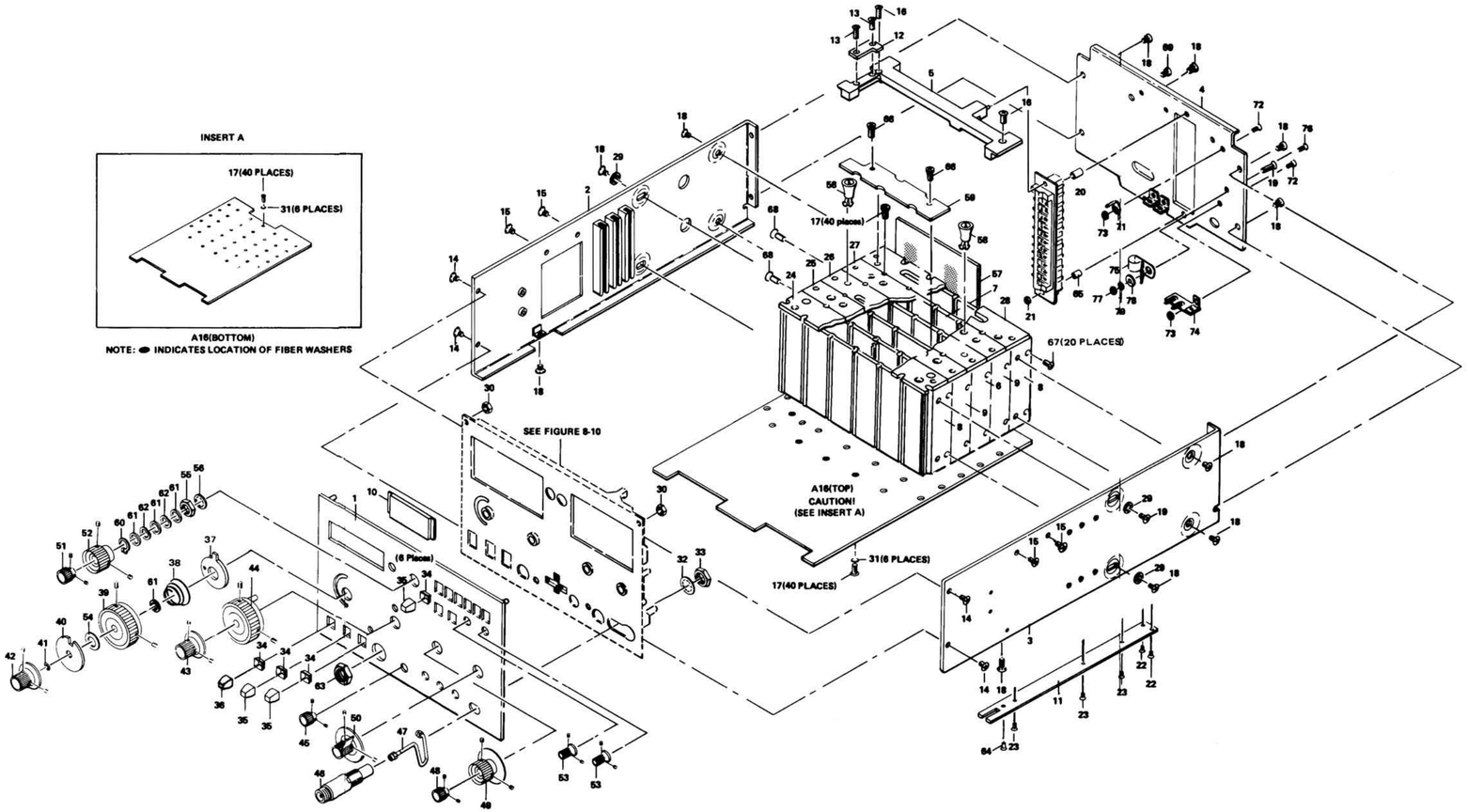

FIGURE 6-1. MECHANICAL CHASSIS PARTS (2 OF 2)

SECTION VII
MANUAL BACKDATING CHANGES

7-1. INTRODUCTION

7-2. This section contains information for adapting this manual to earlier 8559A Spectrum Analyzers. If the serial number prefix of your spectrum analyzer appears on the title page of this manual, the contents of the manual are directly applicable to your instrument. If, however, your spectrum analyzer has a lower serial number prefix than what is shown on the title page, you must adapt this manual to your instrument by changing it as indicated in this section.

7-3. If your instrument has a higher serial number prefix that what is shown on the title page of this manual, it will be documented in a yellow MANUAL UPDATING CHANGES supplement. For additional important information about serial number coverage, refer to INSTRUMENTS COVERED BY MANUAL in Section I.

7-4. HOW TO USE THIS BACKDATING INFORMATION

7-5. Change and correction information in this supplement is itemized on separate pages corresponding to the original manual pages. The pages in this supplement are organized in numerical order by manual page number. These pages are intended to be inserted into the manual to either supplement or replace the original manual pages.

7-6. To adapt this manual to your instrument:

- Insert the change pages in this section into this manual adjacent to the original manual pages.
- Insert any complete replacement pages provided into this manual in the proper location. The original manual pages may be discarded or the original manual may be left intact to document all instrument configurations.

Table 1-1. HP 8559A Specifications (1 of 4)

2236A & Below	Change "Residual FM" specification to read as follows: less than 1 kHz p-p for a time interval less than or equal to .01 sec, 100/120 line voltages; less than 2 kHz p-p, 220/240 line voltages. Delete the following under "Maximum Input (without damage) Levels": Peak Pulse Power +50 dBm (100W, 10 microsecond pulse width, 0.01% duty cycle) with input attenuation >=30 dB. Change "Gain Compression" specification to read as follows: Gain compression is less than 0.5 dB for a 0 dBm input level with 0 dB input attenuation. Under "Display Fidelity", change the Linear specification to read as follows: <+-0.1 division over full 8 division deflection. Change "Humidity Range (Operating)" to read as follows: <95% R.H. 0-degrees C to +40-degrees C. Change "EMI" to read as follows: Conducted and radiated interference is within the requirements of methods CE03 and RE02 of MIL STD 461A, VDE 0871 and CISPR Publications 1, 2, and 4.
2320A & Below	Change "Residual FM" specification to read as follows: less than 1 kHz p-p in 0.1 second.

Pages 4–10 and 4–11:

Paragraph 4–13. Residual FM

2320A & Below

Change SPECIFICATION to read as follows:

Less than 1 kHz peak-to-peak for a time interval 0.1 second; 100/120 line voltages; less than 2 kHz peak-to-peak in a 180-series display mainframe with 220/240 line voltage.

Replace the note in step 6 with the following:

NOTE

A 1 kHz shift in Frequency produces a 0.7 division shift in amplitude.

In step 6, change the last sentence to read:

Peak-to-peak variation of trace should not exceed 0.7 division vertical for each horizontal division.

Page 4-63.

Table 4-18. Performance Test Record (2 of 4)

2320A & Below Under Para. No. 4-13. Residual FM, change the maximum Peak-to-Peak Variation of Trace in test 6 to 0.7 div (1 kHz/0.1 sec).

Pages 5-11 through 5-13:

Paragraph 5-17. Power Supply Checks and Adjustments

2236A & Below	Replace Paragraph 5-17 with new Paragraph 5-17 (SERIAL PREFIX 2236A) included in this Manual Backdating supplement.

5-17. POWER SUPPLY CHECKS AND ADJUSTMENTS (SERIAL PREFIX 2236A)

REFERENCE:

A7, A8, A9 Schematics

DESCRIPTION:

The +14.5V and −10V supplies on Frequency Control Assembly A7 are adjusted. The −12.0V supply on A7 is checked for proper dc output with less than ±50mV variation when tuning the HP 8559A from 0 to 3 GHz. The +10.0V supply on Sweep Generator/Bandwidth Control Assembly A9 is adjusted and the VO (Varactor Offset) voltage on Marker Assembly A8 is adjusted. The +10.0V supply and VO voltage must be adjusted during the first five minutes after the spectrum analyzer is turned on (cold instrument). However, the +14.5V and −10.0V supplies must be adjusted first.

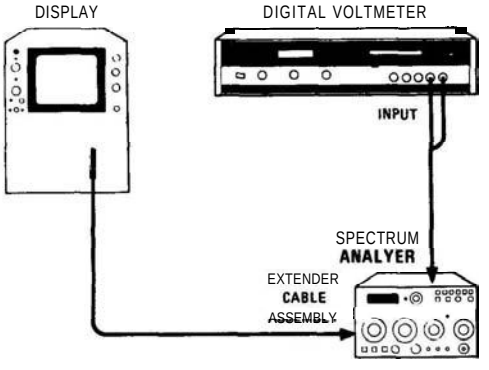

FIGURE 5-1. POWER SUPPLY CHECKS AND ADJUSTMENTS TEST SETUP

EQUIPMENT:

Digital Voltmeter ..... HP 3490A

PROCEDURE:

1. Connect equipment as shown in Figure 5-1. Install Frequency Control Assembly A7 on extender board and connect digital voltmeter to A7TP3 +14.5V.

2. Adjust A7R52 +14.5V adjustment for a voltmeter indication of +14.500 ±0.002 volts.

3. Connect digital voltmeter to A7TP2 and adjust A7R55 −10V adjustment for a voltmeter indication of −10.000 ±0.005 volts.

4. Check for −12.0±0.1V at collector (base) of A7Q1.

5. Select FREQUENCY BAND GHz .01 – 3 and tune from 0 to 3 while monitoring the −12V at collector of A7Q1. The −12V supply should not vary more than ±50mV.

5-17. POWER SUPPLY CHECKS AND ADJUSTMENTS (SERIAL PREFIX **2236A) (Cont'd)**

6. Remove extender board and reinstall Frequency Control Assembly A7.

NOTE

The two following voltage adjustments, **+10V** and VO (Varactor Offset), must be adjusted while analyzer is still cold (during first five minutes after turn-on). If instrument has been operating longer than five minutes, turn off mainframe and remove assemblies A8 and **A9.** Let assemblies A8 and A9 cool on bench for 15 minutes. Replace the two assemblies and proceed with adjustment of **A9R2** and **A8R62** during the first five minutes after turn-on.

7. Connect digital voltmeter to A9TP6 +10V and adjust A9R2 +10V adjustment for a voltmeter indication of +10.000 ± 0.100V.

8. Connect digital voltmeter to A8TP2 VO. Set HP 8559A controls as follows:

FREQUENCY BAND GHz	.01 – 3
ALT IF	ON (depressed)
SIG IDENT	ON (depressed)
SWEEP TIME/DIV	5 msec
SWEEP TRIGGER	SINGLE

9. The voltage at A8TP2 will change (between two values) each time a sweep is triggered. Trigger the sweep a few times and select the sweep that yields the least negative VO voltage. Adjust A8R62 VO adjustment for a voltmeter indication of – 2.00 ± 0.10V.

Pages 5-17 through 5-23:

Paragraph 5-19, Log Amplifier and Linear Adjustments

2208A & Below — Replace Paragraph 5-19 with new Paragraph 5-19 (SERIAL PREFIX 2208A) included in this Manual Backdating supplement.

5.19. LOG AMPLIFIER LOG AND LINEAR ADJUSTMENT (SERIAL PREFIX 2208A)

REFERENCE:

A14 and A15 Schematics

DESCRIPTION:

10 dB/DIV and LIN are adjusted for correct steps and full-screen display translations.

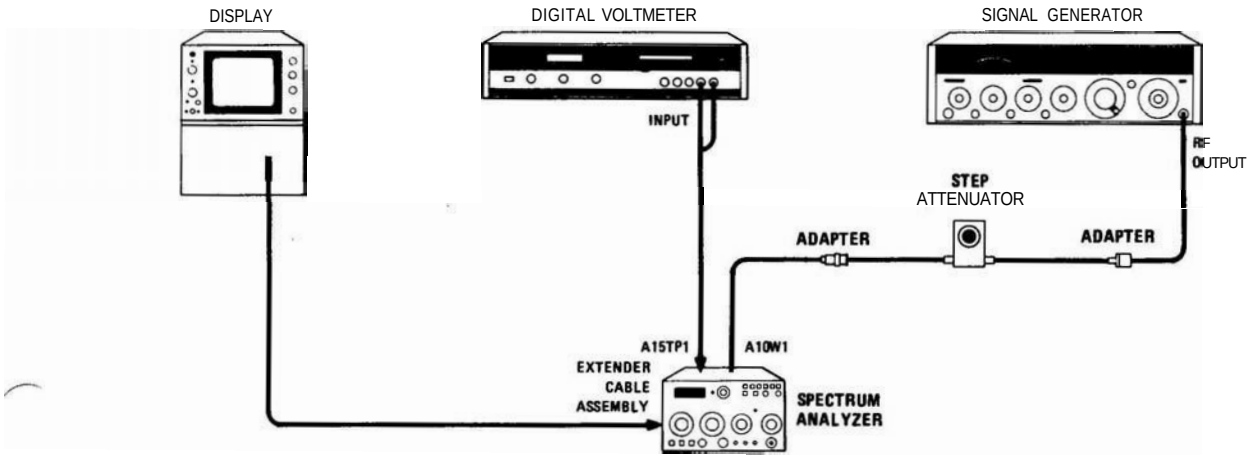

FIGURE 5-3. LOG AMPLIFIER LOG AND LINEAR ADJUSTMENT TEST SETUP

EQUIPMENT:

Signal Generator	HP 8640B
Digital Voltmeter	HP 3490A
Step Attenuator (10 dB/step)	HP 355D, Option H82
Adapter, Type N Male on one end, BNC female on other end	HP 1250-0780
Adapter, BNC Male on one end, SMA Male on other end	HP 1250-0831

PROCEDURE:

1. Set spectrum analyzer controls as follows:

FREQUENCY BAND GHz	.01 – 3
FREQ SPAN/DIV	1 MHz
RESOLUTION BW	300 kHz
INPUT ATTEN	10 dB
REF LEVEL dBm	–50
Amplitude Scale	LIN
SWEEP TIME/DIV	AUTO
SWEEP TRIGGER	FREE RUN

5-19. LOG AMPLIFIER LOG AND LINEAR ADJUSTMENT (SERIAL PREFIX 2208A) (Cont'd)

2. Connect equipment as shown in Figure 5-3. Set signal generator frequency to 321.4 MHz and output level to −40 dBm. Remove A10W1 from A5J2 2nd CONV OUT. Connect signal generator output through step attenuator and adapters to A10W1.

3. Set the TEST-NORM switch A12S1 to the TEST position. Tune signal generator frequency for maximum signal amplitude on oscilloscope display with step attenuator set at 0 dB.

4. Set output level of signal generator for a digital voltmeter reading of 700 mV, with step attenuator set at 0 dB and REF LEVEL dBm set to −50.

5. Set HP 8559A REF LEVEL dBm to −80 and set step attenuator to 30 dB. Observe digital voltmeter reading.

6. Adjust A14R3 GAIN LIN for a digital voltmeter reading of 700 mV.

7. Repeat steps 4, 5, and 6 until the DVM reading in step 5 is 700 ± 2 mV.

8. Set HP 8559A REF LEVEL dBm to −50 and set step attenuator to 0 dB. Change REF LEVEL dBm and step attenuator settings as shown in Table 5-6. If Deviation from Reference is not within the given limits, readjust A14R3.

TABLE 5-6. LINEAR GAIN ADJUSTMENT LIMITS

Reference Level (dBm)	Step Attenuator Setting (dB)	Deviation From Reference
-50	0	Reference (700 mV)
-60	10	±10 mV
-70	20	±20 mV
-80	30	±20 mV
-90	40	±30 mV

9. Set HP 8559A REF LEVEL dBm to 0 and disconnect signal generator from step attenuator. Record offset reading (DVM). The offset should be less than ± 30 mV.

Offset_____ mV

10. Reconnect signal generator as shown in Figure 5-3. Set Amplitude Scale to 10 dB/DIV and set step attenuator to 40 dB.

11. Set output level of signal generator for a digital voltmeter reading of 400 mV plus offset recorded in step 9 (algebraic sum). (Example: if offset if −23 mV, set output level of signal generator for a DVM reading of 377 mV.)

5-19. LOG AMPLIFIER LOG AND LINEAR ADJUSTMENT (SERIAL PREFIX **2208A) (Cont'd)**

12. Set step attenuator to 0 dB. Digital voltmeter should indicate 800 mV, plus offset (algebraic sum) ± 1 mV. If DVM reading is not within limits, adjust A14R2 LOG LIN adjustment for a digital voltmeter reading of 800 mV, plus offset minus 50 percent of overshoot. (Example: if DVM indicates 767 mV and should be indicating 777 mV (– 10 mV overshoot), adjust A14R2 for a DVM reading of 777 mV minus – 5 mV, or 782 mV.)

13. Repeat steps 10, 11, and 12 until the digital voltmeter indicates 800 mV plus offset ± 1 mV with no further adjustment of A14R2 in step 12.

14. Set the step attenuator to the positions shown in Table 5-7 and record DVM reading for each setting. Correct the DVM readings by algebraically adding the offset (recorded in step 9).

TABLE 5-7. LOG FIDELITY CHECK

Step Attenuator Setting (dB)	DVM Reading (mV)	DVM Reading Corrected for Offset		
		Min. (mV)	Actual* (mV)	Max. (mV)
0	_____	799	_____	801
10	_____	697	_____	703
20	_____	596	_____	604
30	_____	496	_____	504
40	_____	395	_____	405
50	_____	294	_____	306
60	_____	193	_____	207
70	_____	92	_____	108

15. Readjust A14R2 if necessary to meet the limits in Table 5-7.

16. Set step attenuator to 0 dB and set output level of signal generator for a digital voltmeter reading of 800 mV plus offset (recorded in step 9) ± 1 mV.

17. Set Amplitude Scale to LIN. The digital voltmeter should indicate the reading set in step 16 ± 25 mV. If it does, go to step 19. If it does not, or if log fidelity is not within limits, go to step 18 and select A14R16*.

18. Select A14R16* to obtain an output in step 17 within ± 25 mV of the reading set in step 16. Decreasing A14R16* 10 percent will increase the DVM reading approximately 30 mV in step 17.

NOTE

Log fidelity must be considered when selecting **A14R16*.** That is, if the DVM READING CORRECTED FOR OFFSET in Table 5-7 is greater than 100 mV for a STEP ATTENUATOR SETTING of 70 dB, **A14R16*** should be selected for a DVM reading greater than the reading set in step 16. If the READING CORRECTED FOR OFFSET is less than 100 mV, **A14R16*** should be selected for DVM reading less than the reading set in step 16.

5-19. LOG AMPLIFIER LOG AND LINEAR ADJUSTMENT (SERIAL PREFIX **2208A)** (Cont'd)

19. Set output level of signal generator for a digital voltmeter reading of 800 mV plus offset (algebraic sum) ± 1 mV.

20. Set Amplitude Scale to 10 dB/DIV and adjust A14R2 LOG LIN adjustment for a digital voltmeter reading of 800 mV plus offset.

21. Repeat step 14 to recheck the log fidelity.

22. Set the REF LEVEL dBm control to −50. Set Amplitude Scale to 1 dB/DIV.

23. Set the step attenuator to 0 dB and set output level of signal generator for a digital voltmeter reading of 700 mV (do not include offset).

24. Set the REF LEVEL dBm control to −90 and the step attenuator to 40 dB. Adjust A14R1 LOG GAIN adjustment for a digital voltmeter reading of 700 mV.

25. Change REFERENCE LEVEL and step attenuator settings as shown in Table 5-8. Deviation from Reference should not exceed the given limits.

TABLE 5-8. LOG GAIN ADJUSTMENT LIMITS

Reference Level (dBm)	Step Attenuator Setting (dB)	Deviation From Reference
–50	0	Reference (700 mV)
-60	10	±30 mV
–70	20	+30 mV
–80	30	+30 mV
–90	40	±30 mV

26. Return the TEST-NORM switch on assembly A12 to the NORM position.

Pages 5-26 through 5-32:

Paragraph 5-21. Bandwidth Filter Adjustments

1909A & Below	Replace Paragraph 5-21 with new Paragraph 5-21 (SERIAL PREFIX 1909A) included in this Manual Backdating supplement.

5-21. BANDWIDTH FILTER ADJUSTMENTS (SERIAL PREFIX 1909A)

REFERENCE:

A9, A11, and A13 Schematics

DESCRIPTION:

The crystal and LC bandwidth filter circuits are adjusted for symmetry, center, and peak. Three-dB bandwidths are adjusted in Sweep Generator/Bandwidth Control Assembly A9 (paragraph 5-22).

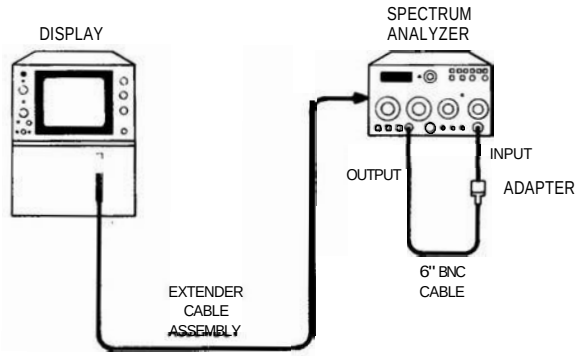

FIGURE 5-6. CRYSTAL AND LC BANDWIDTH FILTER ADJUSTMENTS TEST SETUP

EQUIPMENT:

Adapter, Type N Male to BNC Female ..... HP 1250-0780
BNC Cable, 6-Inch ..... HP 10502A
Crystal Short (3 required) ..... See Figure 5-6

NOTE

A crystal short consists of a .01 μF capacitor (HP Part Number 0160-0161) and a 909 ohm resistor (HP Part Number 0757-0400) connected in series. Two square terminal connectors (HP Part Number 0362-0265) are used to connect the crystal short across the test points.

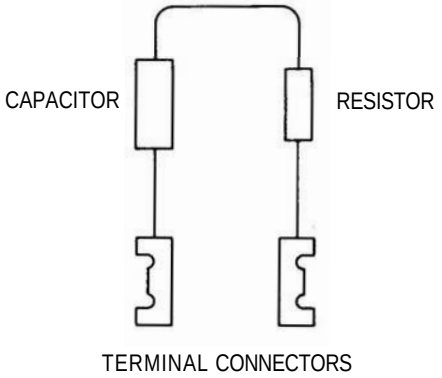

FIGURE 5-6. CRYSTAL SHORT CONFIGURATION

5-21. BANDWIDTH FILTER ADJUSTMENTS (SERIAL PREFIX **1909A)** (Cont'd)

PROCEDURE:

NOTE

Allow 30 minutes **warmup** time before performing adjustments.

1. Set spectrum analyzer controls as follows:

FREQUENCY BAND GHz	.01 – 3
TUNING	35 MHz
FREQ SPAN/DIV	10 kHz
RESOLUTION BW	1 kHz
INPUT ATTEN	30 dB
REF LEVEL dBm	0
Amplitude Scale	LIN
SWEEP TIME/DIV	AUTO
SWEEP TRIGGER	FREE RUN

Crystal Alignment

2. Connect equipment as shown in Figure 5-5.

NOTE

If Sweep **Generator/Bandwidth** Control Assembly A9 has been replaced or adjusted, perform steps 3 through 9. If not, proceed to step 10.

3. Set FREQ SPAN/DIV to 500 kHz and RESOLUTION BW to 1 MHz.

4. Center the signal with TUNING control. Using REF LEVEL FINE control, place signal at 7.1 divisions (0.9 division from top graticule line).

5. Adjust A9R85 LC until signal is two divisions wide at the fifth graticule line (1 MHz wide at 3-dB points).

6. Set FREQ SPAN/DIV to 10 kHz and RESOLUTION BW to 10 kHz.

7. Using REF LEVEL FINE control, place signal at 7.1 divisions.

8. Adjust A9R72 XTL until signal is one division wide at the fifth graticule line (10 kHz wide at 3 dB points).

9. Set FREQ SPAN/DIV to 10 kHz and RESOLUTION BW to 1 kHz.

10. Center signal with TUNING control. (It might be necessary to increase FREQ SPAN/DIV temporarily to find the signal.) Set REF LEVEL FINE control to place signal at sixth graticule line.

NOTE

Do not readjust REF LEVEL **FINE** control until all crystal and LC bandwidth filter adjustments have been performed.

5-21. BANDWIDTH FILTER ADJUSTMENTS (SERIAL PREFIX **1909A)** (Cont'd)

11. Set FREQ **SPAN/DIV** to 20 kHz, RESOLUTION BW to 30 kHz, and SWEEP **TIME/DIV** to 10 **mSEC.**

NOTE

A non-metallic tuning tool is required for adjustments on Bandwidth Filter Assemblies A11 and A13.

12. Connect crystal shorts (through cover access holes) across **A13TP1/TP2,** A11**TP1/TP2,** and A11**TP4/TP5.**

NOTE

Keep crystal spike centered during adjustments. The SYM and CTR adjustments for each crystal are interacting.

13. Adjust front-panel TUNING control to center **bandpass** spike (Figure 5-7) on the CRT display.

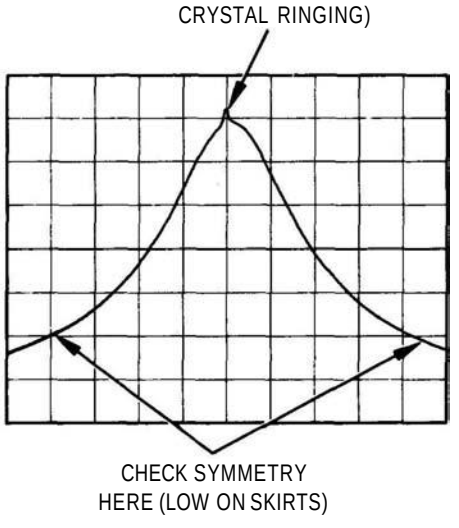

FIGURE 5-7. ADJUSTING CRYSTAL SYMMETRY AND CRYSTAL CENTERING

14. Adjust **A13C38** SYM and **A13C54** CTR for a centered and symmetrical *bandpass* as shown in Figure 5-7. Adjust **A13C54** CTR for minimum signal amplitude.

15. Remove crystal short from **A13TP1/TP2.**

5-21. BANDWIDTH FILTER ADJUSTMENTS (SERIAL PREFIX **1909A)** (Cont'd)

16. Adjust **A13C15** SYM and **A13C25** CTR for a centered and symmetrical bandpass. Adjust **A13C25** CTR for minimum signal amplitude,

17. Remove crystal short from **A11TP4/TP5.**

18. Adjust **A11C38** SYM and **A11C54** CTR for a centered and symmetrical bandpass. Adjust **A11C54** for minimum signal amplitude.

19. Remove crystal short from **A11TP1/TP2.**

20. Adjust **A11C15** SYM and **A11C25** CTR for a centered and symmetrical bandpass. Adjust **A11C25** for minimum signal amplitude.

21. Remove the crystal shorts.

LC Alignment

22. Perform preliminary LC filter adjustments as follows:

NOTE

When Bandwidth Filter Assemblies **A11** and A13 are installed with covers in place, midget copper alligator clips (HP Part Number **1400-0483)** can be used to short test points to the cover.

a. Install **A13** on extender board.

b. Short to ground the following test points: **A13TP6, A11TP3,** and **A11TP6.** Jumper **A9TP1** to **A9TP2.**

c. Adjust **A13C73** for minimum signal amplitude.

d. Disconnect short from A13**TP6** and short to ground A13**TP3.**

e. Adjust **A13C74** for minimum signal amplitude.

f. Reinstall A13 and install **A11** on extender board.

g. Disconnect short from **A13TP3** and short to ground A11**TP6.**

h. Adjust A11**C73** for minimum signal amplitude.

i. Disconnect short from A11**TP6** and short to ground **A11TP3.**

j. Adjust A11**C74** for minimum signal amplitude.

k. Disconnect shorts from test points and reinstall **A11**. Replace covers on **A11** and A13 assemblies. Remove jumper from **A9TP1/A9TP2.**

5-21. BANDWIDTH FILTER ADJUSTMENTS (SERIAL PREFIX **1909A)** (Cont'd)

23. Carefully center signal on CRT in 30 kHz RESOLUTION BW; then switch RESOLUTION BW to 100 kHz. Note where signal intersects the center vertical graticule line.

24. Adjust **A13C45** LC CTR for maximum signal amplitude where the signal intersects the center vertical graticule line.

25. Switch RESOLUTION BW to 30 kHz and center signal; then switch to 100 kHz. Note where signal intersects the center vertical graticule line.

26. Adjust **A13C23** LC CTR for maximum signal amplitude where the signal intersects the center vertical graticule line.

27. Switch RESOLUTION BW to 30 kHz and center signal; then switch to 100 kHz. Note where signal intersects the center vertical graticule line.

28. Adjust **A11C45** LC CTR for maximum signal where the signal intersects the center vertical graticule line.

29. Switch RESOLUTION BW to 30 kHz and center signal; then switch to 100 kHz. Note where signal intersects the center vertical graticule line.

30. Adjust **A11C23** LC CTR for maximum signal amplitude where the signal intersects the center vertical graticule line.

31. Switch RESOLUTION BW between 100 kHz and 30 kHz to be sure the signal is centered at both bandwidth settings.

Bandwidth Amplitude

32. Set Amplitude Scale to 1 **dB/DIV** and SWEEP **TIME/DIV** to AUTO.

33. Set RESOLUTION BW to 3 MHz and FREQ **SPAN/DIV** to 50 kHz.

34. Adjust fine TUNING and REF LEVEL FINE for a centered signal at 7 divisions.

35. Set RESOLUTION BW to 100 kHz and center signal with fine TUNING control. Adjust **A13R26** LC and A11**R26** LC equally to obtain a signal amplitude of 7 divisions.

36. Set RESOLUTION BW to 1 kHz and FREQ **SPAN/DIV** to 10 kHz. Center signal with fine TUNING control. Adjust A11**R31** XTL and **A13R31** XTL equally for a signal amplitude of 7 divisions.

NOTE

Each potentiometer should be adjusted to accomplish half the necessary increase in signal amplitude.

5-21. BANDWIDTH FILTER ADJUSTMENTS (SERIAL PREFIX 1909A) (Cont'd)

37. Set FREQ SPAN/DIV to 10 kHz and RESOLUTION BW to 1 kHz with arrows aligned (OPTIMUM). Push in to couple the two controls.

38. Adjust REF LEVEL FINE for a signal amplitude of 7 divisions.

39. With controls coupled, step RESOLUTION BW from 1 kHz to 3 MHz. Variation in signal amplitude should be less than ±0.4 dB.

40. If variation in signal amplitude is not within limits, repeat steps 32 through 39.

Pages 5–33 through 5–37:

Paragraph 5-22. 3 dB Bandwidth Adjustment

1909A & Below	Replace Paragraph 5–22 with new Paragraph 5–22 (SERIAL PREFIX 1909A) included in this Manual Backdating supplement.

5-22. 3 dB BANDWIDTH ADJUSTMENTS (SERIAL PREFIX 1909A)

REFERENCE:

A9 Schematic

DESCRIPTION:

The 3-dB bandwidths for the 3 MHz, 1 MHz and 300 kHz RESOLUTION BW settings are adjusted using the CAL OUTPUT as the signal source. The 3-dB bandwidths for the 10 kHz, 3 kHz, and 1 kHz RESOLUTION BW settings are adjusted by injecting a stable 321.4 MHz signal into the third converter of the spectrum analyzer.

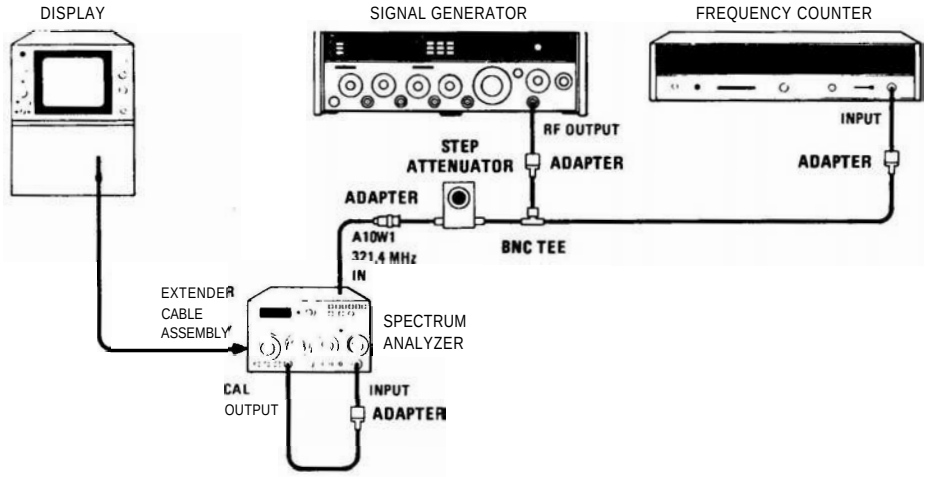

FIGURE 5-8. 3-dB BANDWIDTH ADJUSTMENT TEST SETUP

PROCEDURE:

1. Set spectrum analyzer controls as follows:

FREQUENCY BAND GHz	.01 – 3
TUNING	35 MHz
FREQ SPAN/DIV	200 kHz
RESOLUTION BW	1 MHz
INPUT ATTEN	20 dB
REF LEVEL dBm	0
Amplitude Scale	LIN
SWEEP TIME/DIV	1 msec
SWEEP TRIGGER	FREE RUN
VIDEO FILTER	MIN

2. Connect equipment as shown in Figure 5-8 except for signal input to A10W1. Connect CAL OUTPUT to spectrum analyzer INPUT 50Ω.

5-22. 3 **dB** BANDWIDTH ADJUSTMENTS (SERIAL PREFIX **1909A) (Cont'd)**

3. Set signal level of 7.1 divisions on display with REF LEVEL FINE control. (Signal should be 0.9 division from top graticule line.)

4. Set RESOLUTION BW to 1 MHz and FREQ SPAN/DIV to 200 kHz. Adjust A9R85 LC to set bandwidth of 5 divisions at the fifth graticule line.

5. Set RESOLUTION BW to 3 MHz and FREQ SPAN/DIV to 500 kHz. The bandwidth at the fifth graticule line should be between 5.4 and 6.6 divisions.

NOTE

A9R85 LC may be further adjusted to bring the 3 MHz and 300 kHz bandwidths within limits; however, the final measurement of the 1 MHz **bandwidth** must be between 4.5 and 5.5 divisions at the fifth **graticule** line. (If the 3 MHz bandwidth cannot be brought within limits by adjustment of **A9R85** LC, change the value of **factory-selected** resistor **A9R95*.)**

6. Set RESOLUTION BW to 300 kHz and FREQ SPAN/DIV to 50 kHz. The bandwidth should be between 5.4 and 6.6 divisions at the fifth graticule line. (If the bandwidth cannot be adjusted within the specified limits, change the value of factory-selected resistor A9R89*.)

7. Set RESOLUTION BW to 100 kHz and FREQ SPAN/DIV to 20 kHz. The bandwidth should be between 4.3 and 5.7 divisions at the fifth graticule line.

NOTE

If the **100** kHz bandwidth is not within the specified limits, change the values of **factory-selected** resistors **A13R19*, A13R43*,** and **A11R43*.** If the bandwidth is too wide, increase the value of the resistors; if the bandwidth is too narrow, decrease the value of the resistors. The three **factory-selected** resistors need not be of equal value, but each must be within one standard value of the others.

8. Set RESOLUTION BW to 30 kHz and FREQ SPAN/DIV to 10 kHz. The bandwidth should be between 2.6 and 3.4 divisions at the fifth graticule line.

NOTE

If the 30 kHz bandwidth is not within the specified limits, change the values of **factory-selected** resistors A11**R23*,** A11**R48*, A13R23*,** and **A13R48*.** If the bandwidth is too wide, decrease the value of the **factory-selected** resistors; if the bandwidth is too narrow, increase the value of the resistors. The four **factory-selected** resistors need not be of equal value, but each must be within one standard value of the others.

9. Connect signal generator through the BNC Tee connector to the step attenuator and the frequency counter as shown in Figure 5-8. Set the signal generator to approximately 0 dBm and the step attenuator to 30 dB.

5-22. 3 dB BANDWIDTH ADJUSTMENTS (SERIAL PREFIX 1909A) (Cont'd)

10. Remove A10W1 from A5J2 2nd CONV OUT Connect step attenuator through adapter to A10W1.

11. Set HP 8559A RESOLUTION BW to 1 MHz. Adjust the output level of signal generator to place the signal near center graticule line. Tune signal generator frequency to peak signal on oscilloscope display (near 321.4 MHz).

12. Set RESOLUTION BW to 3 kHz. Tune signal generator to peak signal on oscilloscope display.

13. Adjust output level of signal generator to place signal at 7.1 divisions.

14. Note the counter frequency and tune the signal generator 1500 Hz below the center frequency noted. Record the new counter frequency.

_____ MHz

15. Adjust A9R72 XTL to bring signal level to the fifth graticule line (three divisions from the top graticule line).

16. Increase signal generator frequency until signal on oscilloscope display peaks and then decreases to the fifth graticule line. Record counter frequency.

_____ MHz

17. Compare new frequency with frequency recorded in step 14. The difference between the two frequencies should be 2800 to 3200 Hz. If the bandwidth is not within limits, repeat steps 12 through 17, slightly readjusting A9R72 XTL, until the specified limits are achieved.

18. Set RESOLUTION BW to 10 kHz. Tune signal generator to peak signal on oscilloscope display.

19. Adjust REF LEVEL FINE to place signal at 7.1 divisions.

20. Decrease the signal generator frequency until the signal on the oscilloscope display drops to the fifth graticule line. Record counter frequency.

_____ MHz

21. Increase the signal generator frequency until the signal on the oscilloscope display peaks and then decreases to the fifth graticule line. Record counter frequency.

_____ MHz

5-22. 3 dB BANDWIDTH ADJUSTMENTS (SERIAL PREFIX **1909A**) (Cont'd)

22. Compare new frequency with frequency recorded in step 20. The difference between the two frequencies should be 9.000 kHz to 11.000 kHz.

NOTE

A9R72 XTL may be further adjusted to bring the 10 kHz and 1 kHz bandwidths within limits; however, the final measurement of the 3 kHz bandwidth must be between 2700 Hz and 3300 Hz. (If the 10 kHz bandwidth cannot be brought within limits by adjustment of **A9R72** XTL, change the value of factory-selected resistor **A9R78*.**)

23. Set RESOLUTION BW to 1 kHz. Tune signal generator to peak signal on oscilloscope display.

24. Adjust REF LEVEL FINE to place signal at 7.1 divisions. Record counter frequency.

_____ MHz

25. Increase signal generator frequency until signal on oscilloscope display drops to the fifth graticule line. Record new counter frequency.

_____ MHz

26. The difference between the two frequencies recorded in steps 24 and 25 should be 450 Hz to 550 Hz.

27. Reconnect A10W1 to A5J2.

Pages 5-44 through 5-48:

Paragraph 5-25. First Converter Adjustments

2236A & Below	Replace Paragraph 5-25 with new Paragraph 5-25 (SERIAL PREFIX 2236A) included in this Manual Backdating supplement.
2004A & Below	Delete steps 28 through 37.

5-25. FIRST CONVERTER ADJUSTMENTS (SERIAL PREFIX 2236A)

REFERENCE:

A3, A4, A5, A6, and A7 Schematics

DESCRIPTION:

The First LO (A6 YTO) is adjusted by monitoring the YTO output at the RF input connector (LO feedthrough) and the tuning voltage (TUNE) output of the A7 Frequency Control board and adjusting the YTO low-end frequency for 3 GHz at 0V tuning voltage and 6 GHz at –10V tuning voltage.

The FM Driver is adjusted by inputting comb signals to the analyzer and adjusting for proper spacing (span linearity) of displayed signals on the CRT display.

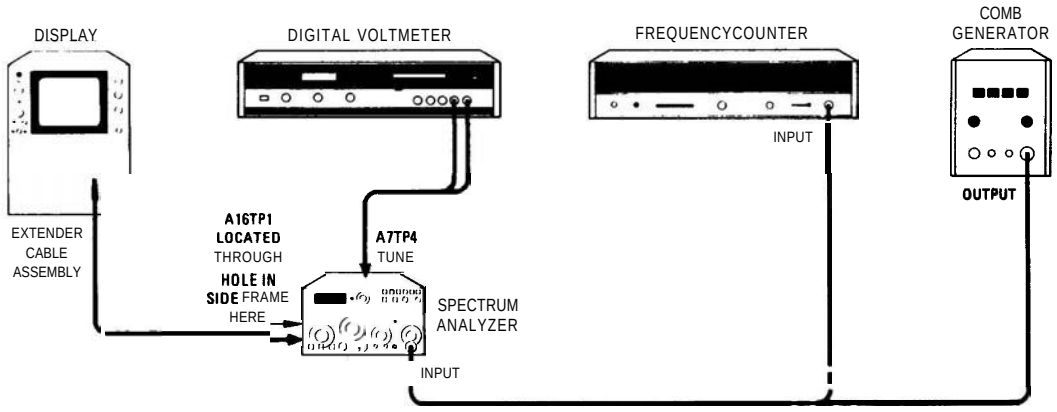

FIGURE 5-11. FIRST CONVERTER ADJUSTMENTS TEST SETUP

EQUIPMENT:

Frequency Counter	HP 5340A
Digital Voltmeter (DVM)	HP 3490A
Comb Generator	HP 8406A

PROCEDURE:

1. Allow one-half hour warmup time of equipment with analyzer connected to mainframe with extender cable.

First LO Adjustments

2. Connect DVM to A7TP4 TUNE.

3. Set analyzer controls as follows:

INPUT ATTEN	0 dB
FREQ SPAN/DIV	0 (zero)
ALT IF	OFF (out)

5-25. FIRST CONVERTER ADJUSTMENTS (SERIAL PREFIX **2236A)** (Cont'd)

4. Connect frequency counter to analyzer RF Input.

5. Jumper A16TP1 DIODE BIAS to Ground. A16TP1 is located on the Motherboard through hole in the analyzer side frame.

6. Adjust front-panel TUNING control for DVM indication of 0.000 Vdc (fully counterclockwise).

7. Adjust A7R74 3 GHz for frequency counter indication of 3.000 GHz ± 1 MHz. If this adjustment cannot be achieved, selectable resistor A7R94* can be changed to provide the proper range necessary.

8. Adjust front-panel TUNING control for DVM indication of – 10.000 Vdc.

9. Set A7R95 6 GHz F (fine) to approximately midrange (R95 is a 20-turn potentiometer).

10. Adjust A8R28 6 GHz C (coarse) for a frequency counter indication of 6.000 GHz ± 2 MHz.

11. Retune front-panel TUNING control for 0.000 Vdc DVM indication and readjust A7R74 3 GHz if necessary for frequency counter indication of 3.000 GHz ± 1 MHz.

12. Tune front-panel TUNING control for – 10.000 Vdc DVM indication.

13. Lightly tap the top edge of the A7 Frequency Control board with the handle of a small screwdriver to seat controls.

14. Adjust A7R95 6 GHz F (fine) for frequency counter indication of 6.000 GHz ± 1 MHz.

Alternate IF First LO Shift Check

15. Press front-panel ALT IF pushbutton IN to activate alternate IF.

16. Verify YTO frequency shift according to the following table.

TABLE 5-10. FIRST LO SHIFT CHECK

FREQUENCY BAND GHz	ALT IF	FREQUENCY COUNTER INDICATION
1 (.01–3)	OFF	Reference (6.000 GHz)
1 (.01–3)	ON	Reference - 15 MHz ±800 kHz
2 (6 - 9)	ON	Reference + 15 MHz ±800 kHz
3 (3 - 9)	ON	Reference - 7.5 MHz ±400 kHz
4 (9–15)	ON	Reference + 7.5 MHz ±400 kHz
5 (6–15)	ON	Reference - 5 MHz ±300 kHz
6 (12.1 - 21)	ON	Reference + 5 MHz ±300 kHz

17. Remove jumper from A16TP1 DIODE BIAS to Ground.

5-25. FIRST CONVERTER ADJUSTMENTS (SERIAL PREFIX 2236A) (Cont'd)

FM Driver Adjustment

18. Disconnect frequency counter from analyzer RF Input and connect comb generator to RF Input,

19. Set comb generator for 1 MHz comb teeth.

20. Set analyzer controls as follows:

FREQ SPAN/DIV	1 MHz
RES BW	30 kHz
TIME/DIV	AUTO
FREQUENCY BAND GHz	Band 1 (.01 – 3)
REF LEVEL dBm	– 20
INPUT ATTEN	0 dB
ALT IF	OFF (out)
SIG IDENT	OFF (out)
Amplitude Scale	10 dB/DIV

21. Tune front-panel TUNING control for approximately 1500 MHz indication on front-panel FREQUENCY display.

22. Adjust front-panel TUNING FINE control to place a comb tooth on the first graticule line on the main-frame CRT display.

23. Adjust A7R38 FM to place a comb tooth on the ninth graticule line.

24. Readjust TUNING FINE control to place a comb tooth on the first graticule line and adjust A7R38 FM to place a comb tooth on each of the graticule lines while keeping the first comb tooth aligned using the TUNING FINE control.

25. Tune to approximately 100 MHz and verify that when a comb tooth is placed on the first graticule line using the TUNING FINE control that the ninth comb tooth is aligned with the ninth graticule line ± 1 minor division.

26. Repeat step 25 for frequency of approximately 2500 MHz.

27. If necessary, A7R38 FM may be compromise adjusted for best span linearity at the three frequencies indicated.

28. Set comb generator for 100-MHz comb teeth.

29. Adjust front-panel TUNING control for 100 MHz indication on FREQUENCY display

30. Set FREQ SPAN/DIV to 2 MHz.

31. Adjust TUNING to place 100-MHz comb tooth on center graticule line.

5-25. FIRST CONVERTER ADJUSTMENTS (SERIAL PREFIX 2236A) (Cont'd)

32. Set FREQ SPAN/DIV to 1 MHz. Note position of comb tooth.

33. Adjust A7R99 MO to place comb tooth midway between position noted in step 32 and center graticule line.

34. Set FREQ SPAN/DIV to 2 MHz.

35. Adjust TUNING to place comb tooth on center graticule line.

36. Set FREQ SPAN/DIV to 1 MHz. Note displacement of comb tooth from center graticule line.

37. Repeat steps 30 through 36 until displacement of comb tooth is less than 0.2 major division when FREQ SPAN/DIV is switched from 2 MHz to 1 MHz.

Page 6-7.

Table 6-3. Replaceable Parts

2236A & Below	Change W3 to HP Part Number 1250-1159, Check Digit 4, CABLE ASSEMBLY, YTO TO FIRST MIXER.
1951A, 1945A & Below	Change W4 to HP Part Number 08559-60001, Check Digit 3, CABLE ASSEMBLY, CAL OUTPUT.

Page 6-8:

Figure 6-1. Mechanical Chassis Parts

2236A & Below	Change item (2), GUSSET, LEFT, to HP Part Number 08559-60032, Check Digit 4. Change item (3), GUSSET, RIGHT, to HP Part Number 08559-60031, Check Digit 3.
2208A & Below	Change item (1), PANEL, FRONT, to HP Part Number 08559-00001, Check Digit 7. Change item (2), GUSSET, LEFT, to HP Part Number 08559-00005, Check Digit 1. Change item (3), GUSSET, RIGHT, to HP Part Number 08559-00004, Check Digit 0. Change item (11), GUIDE RAIL, BOTTOM, to HP Part Number 08559-20013, Check Digit 3.
2019A00441 & Below	Change HP Part Number 08559-00028 to HP Part Number 08558-00081, Check Digit 2, ATTENUATOR BRACKET. Add HP Part Number 08559-00023, Check Digit 3, BRACKET, ATTENUATOR DR SUPPORT.

Pages 8-17 through 8-23/8-24: DIGITAL PANEL METER ASSEMBLY A1

Table 8-1. Digital Panel Meter Assembly A1, Replaceable Parts

2218A & Below	Replace Table 8-1 with new Table 8-1 (SERIAL PREFIX 2218A) included in this Manual Backdating supplement.
2208A & Below	Change A1A1 to HP Part Number 08559-60032, Check Digit 0. Add A1A1MP1, HP Part Number 0380-1047, Check Digit 3, SPACER-RVT-ON .25-IN-LG .15-IN-ID.
1945A00241,249, 258,262,265,277; 1951A00283,286, 288-290,292, 295-300; 2003A & Below	Change A1A2C4 and A1A2C5 to HP Part Number 0160-3914, Check Digit 1, CAPACITOR-FXD .01UF +-10% 100VDC CER. Change A1A2L1 to HP Part Number 08559-80002, Check Digit 6, COIL, 110 UH.

Figure 8-5. Digital Panel Meter Assembly Al, Component Locations

2218A & Below	Replace Figure 8-5 with new Figure 8-5 (SERIAL PREFIX 2218A) included in this Manual Backdating supplement.

Figure 8-6. Digital Panel Meter Assembly A1, Schematic Diagram

2218A & Below	Replace Figure 8-6 with new Figure 8-6 (SERIAL PREFIX 2218A) included in this Manual Backdating supplement.
1945A00241,249, 258,262,265,277; 1951A00283,286, 288-290,292, 295-300; 2003A & Below	Make the following changes in function block (C): Change C4 and C5 to .01UF. Change L1 to 110 UH.

TABLE 8-1. DIGITAL PANEL METER ASSEMBLY **A1,** REPLACEABLE PARTS (SERIAL PREFIX 2218A)

Reference Designation	HP Part Number	C D	Qty	Description	Mfr Code	Mfr Part Number
A1				FREQUENCY DISPLAY ASSEMBLY		
A1A1	08559-60072	8	1	DPM DISPLAY	28480	08559-60072
A1A1DS1	1990-0693	7	5	DISPLAY NUM SCG 1-CHAR .3 H	28480	1DS1-3533
A1A1DS2	1990-0693	7		DISPLAY NUM SEG 1 CHAR .3 H	28480	1DS1-3533
A1A1DS3	1990-0693	7		DISPLAY-NUH-SEG 1-CHAR .3 H	28480	1DS1-3533
A1A1DS4	1990-0693	7		DISPLAY-NUM-SEG 1 CHAR .3 H	28480	1DS1-3533
A1A1DS5	1990-0693	7		DISPLAY-NUM-SEG 1-CHAR .3 H	28480	1DS1-3533
A1A1XDS1	1200-0834	5	5	SOCKET-IC 10-CONT DIP DIP SLDR	28480	1200-0834
A1A1XDS2	1200-0834	5		SOCKET-IC 10-CONT DIP DIP SLDR	28480	1200-0834
A1A1XDS3	1200-0834	5		SOCKET-IC 10 CONT DIP DIP SLDR	28480	1200-0834
A1A1XDS4	1200-0834	5		SOCKFT-IC 10-CONT DIP DIP SLDR	28480	1200-0834
A1A1XDS5	1200-0834	5		SOCKET IC 10 CONT DIP DIP SLDR	28480	1200-0834
A1A2	08559-60033	1	1	DPM DRIVER	211480	08559-60033
A1A2C1	0160-2220	0	1	CAPACITOR FXD 1200PF +-5% 300VDC MICA	28480	0160-2220
A1A2C2	0160-3402	2	1	CAPACITOR-FXD 1UF +-5% 50VDC HCT-POLYC	28480	0160-3402
A1A2C3	0140-0200	0	1	CAPACITOR FXD 390PF + 5% 300VDC HICA	72136	DM15F391J0300WV1CR
A1A2C4	0160-3751	4	2	CAPACITOR-FXD 2200PF +-5% 50VDC CER	28480	0160-3751
A1A2C5	0160-3751	4		CAPACITOR FXD 2200PF + 5% 50VDC CER	28480	0160-3751
A1A2C6	0160-3661	5	1	CAPACITOR-FXD .1UF +-5% 50VDC MET POLYC	28480	0160-3661
A1A2C7	0180-0197	8	1	CAPACITOR-FXD 2.2UF+-10% TOVDC TA	56289	150D225X9020A2
A1A2C8	0180-1746	5	2	CAPACITOR-FXD 15UF+-10% 20VDC TA	56289	150D156X9020B2
A1A2C9	0180-2208	6	1	CAPACITOR FXD 220UF+-10% 10VDC TA	56289	150D227X9010S2
A1A2C10	0180-1746	5		CAPACITOR-FXD 15UF+-10% 20VDC TA	56289	150D156X9020B2
A1A2C11	0160-3879	7	2	CAPACITOR-FXD .01UF +-20% 100VDC CER	28480	0160-3879
A1A2C12	0160-0127	2	1	CAPACITOR-FXD 1UF +-20% 25VDC CER	28480	0160-0127
A1A2C13	0160-3879	7		CAPACITOR-FXD .01UF +-20% 100VDC CEX	28480	0160-3879
A1A2CR1	1901-0050	3	1	DIODF SWITCHING 80V 200MA TNR DO-35	28480	1901-0050
A1A2J1	1251-4797	4	1	CONNECTOR 10 PIN M POST TYPE	28480	1251-4797
A1A2L1	08559-80010	6	1	COIL, 540UH	28480	08559-80010
A1A2L2	9140-0129	1	1	INDUCTOR RF-CH MLD 220UH 5% .166DX.385LG	28480	9140-0129
A1A2L3	9100-1641	0	1	INDUCTOR RF-CH MLD 240UH 5% .166DX.385LG	28480	9100-1641
A1A2Q1	1854-0404	0	1	TRANSISTOR NPN SI TO-18 PD=360MW	28480	1854-0404
A1A2Q2	1853-0281	9	1	TRANSISTOR PNP 2N2907A SI TO 18 PD=400MW	04713	2N2907A
A1A2Q3	1855-0420	2	1	TRANSISTOR J FET 2N4391 N CHAN D-MODE	01295	2N4391
A1A2Q4	1854-0071	7	1	TRANSISTOR NPN SI PD=300MW FT=200MHZ	28480	1854-0071
A1A2R1	0811-0696	1	1	RESISTOR 91K 1% .125W PWW TC=0+5	28480	0811-0696
A1A2R2	0811-0640	5	3	RFSISTOR 100K .01% .125W PUU TC=0+-10	28480	0811-0640
A1A2R3	0757-0460	1	1	RESISTOR 61.9K 1% .125W F TC=0+-100	74546	C4-1/8-T0-6192-F
A1A2R4	0698-3162	0	1	RESISTOR 46.4K 1% .125W F TC=0+-100	24546	C4 1/8-T0-4642-F
A1A2R5	0698-3155	1	1	RESISTOR 4.64K 1% .125W F TC=0+-100	74546	C4 1/8-T0-4641 F
A1A2R6	2100-1738	9	1	RESISTOR-TRMR 10K 10% C TOP-ADJ 1-TRN	73138	82PR10K
A1A2R7	2100-2655	1	1	RESISTOR-TRMR 100K 10% C TOP-ADJ 1 TRN	73138	82PR100K
A1A2R8	0757-0442	9	2	RFSISTOR 10K 1% .125W F TC=0+-100	24546	C4-1/8-T0-1002-F
A1A2R9	0757-0442	9		RCSISTOR 10K 1% .125W F TC=0+ 100	24546	C4-1/8-T0-1002-F
A1A2R10	0757-0274	5	1	RESISTOR 1.21K 1% .125W F TC=0+-100	24546	C4-1/8-T0-1211-F
A1A2R11	0757-0280	3	1	RESISTOR 1K 1% .125W F TC=0+-100	24546	C4-1/8-T0-1001-F
A1A2R12	0757-0438	3	2	RESISTOR 5.11K 1% .125W F TC=0+-100	74546	C4-1/8-T0-5111-F
A1A2R13	0698-3136	8	1	RESISTOR 17.8K 1% .125W F TC=0+-100	24546	C4-1/8-T0-1782-F
A1A2R14	0757-0416	7	1	RESISTOR 511 1% .125W F TC=0+-100	24546	C4-1/8-T0-511R-F
A1A2R15	0698-3442	9	1	RESISTOR 237 1% .125W F TC=0+-100	24546	C4-1/8-T0-237R-F
A1A2R16	0757-0438	3		RESISTOR 5.11K 1% .125W F TC=0+-100	24546	C4-1/8-T0-5111-F
A1A2R17	0698-3438	3	2	RESISTOR 147 1% .125W F TC=0+-100	24546	C4-1/8-T0-147R-F
A1A2R18	0757-0279	0	1	RESISTOR 3.16K 1% .125W F TC=0+-100	24546	C4-1/8-T0-3161-F
A1A2R19	0698-0085	0	1	RESKSTOR 2.61K 1% .125W F TC=0+-100	24546	C4-1/8-T0-2611-F
A1A2R20	0698-3438	3		RESISTOR 147 1% .125W F TC=0+-100	24546	C4-1/8-T0-147R-F
A1A2R21	0811-0640	5		RESKSTOR 100K .01% .125W PWU TC=0+-10	28480	0811-0640
A1A2R22	0811-0640	5		RESISTOR 100K .01% .125W PUU TC=0+-10	28480	0811-0640
A1A2TP1	1251-0600	0	1	CONNECTOR-SCL CONT PIN 1.14-MM-BSC-SZ SQ	28480	1251-0600
A1A2U1	1826-1058	3	1	IC OP AMP CP 8-TO-99 PKG	28480	1826-1058
A1A2U2	1826-0588	2	1	IC CONV 16-DIP-P PKG	17856	LD120CJ
A1A2U3	1826-0587	1	1	IC CONV 18-DIP-P PKG	17856	LD121CJ
A1A2U4	1820-1903	5	1	IC DRVR TTL DSPL DRVR	07263	9368PC
A1A2U5	1810-0347	8	2	NETUORK-RES 8-SIP2.2K OHM X 4	01121	208B222
A1A2U6	1810-0347	8		NETWORK-RES 8-SIP2.2K OHM X 4	01121	208B222
A1A2VR1	1902-0625	0	1	DIODE-ZNR 1N829 6.2V 5% DO-7 PD=.25W	04713	1N829
A1A2VR2	1902-3149	9	1	DIODE-ZNR 9.09V 5% DO-35 PD=.4W	28480	1902-3149
A1A2VR3	1902-3024	9	1	DIODE-ZNR 2.87V 5%DO-7 PD=.4W TC=-.07%	28480	1902-3024
A1A2VR4	1902-1286	1	1	DIODE-ZNR 1N5342B 6.8V 5% PD=5W TC=+200%	04713	1N5342B
A1A2XA1	1251-3403	7	1	CONNECTOR-PC EDGE 10-CONT/ROW 2-ROWS	28480	1251-3403

See introduction to this section for ordering information
***Indicates** factory selected value

A1A2
DPM DRIVER

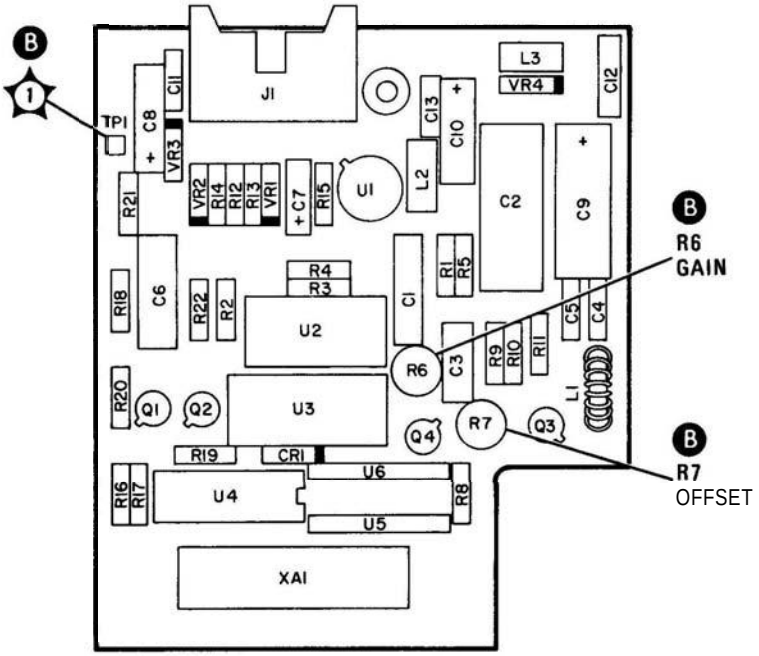

A1A1
DPM DISPLAY

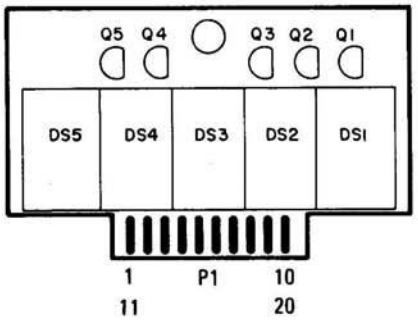

FIGURE 85. DIGITAL PANEL METER ASSEMBLY A1, COMPONENT LOCATIONS (SERIAL PREFIX 2218A)

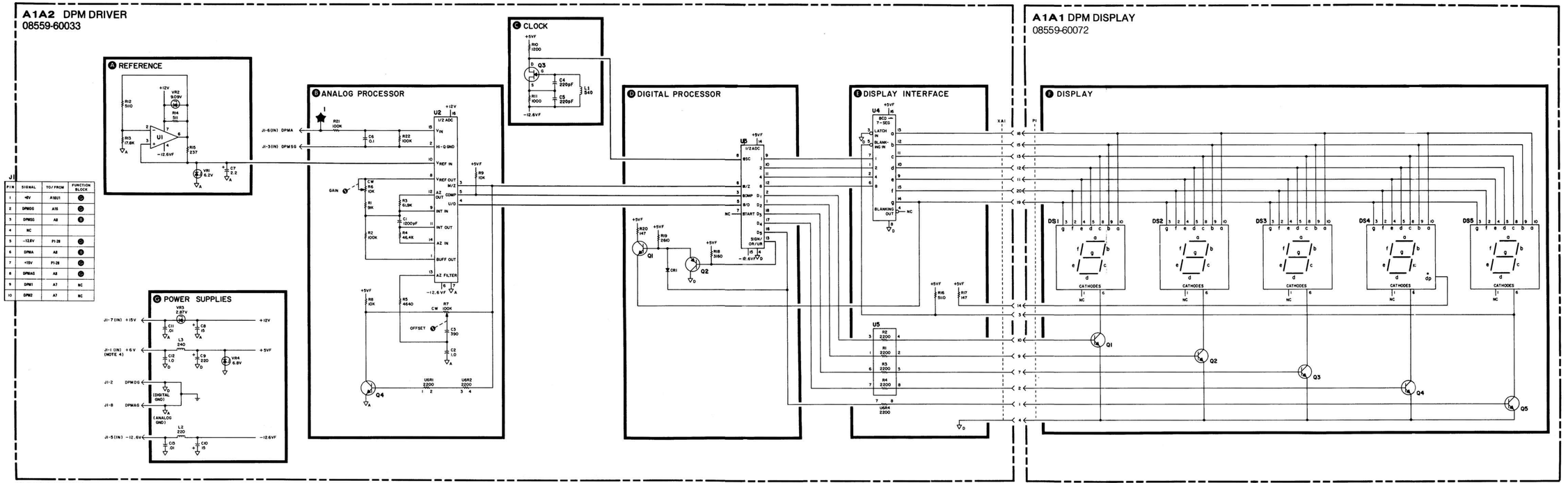

J1			
PIN	SIGNAL	TO/FROM	FUNCTION BLOCK
1	+6V	A1U1	D
2	DPMDG	A1E	D
3	DPMSG	A2	B
4	NC		
5	-12.6V	P1-28	C
6	DPMA	A2	B
7	+15V	P1-28	C
8	DPMAG	A2	C
9	DPM1	A7	NC
10	DPM2	A7	NC

NOTES:

1. REFERENCE DESIGNATORS WITHIN THIS ASSEMBLY ARE ABBREVIATED. PREFIX ABBREVIATION WITH ASSEMBLY NUMBER FOR COMPLETE REFERENCE DESIGNATOR.
2. UNLESS OTHERWISE INDICATED: RESISTANCE IN OHMS (Ω) CAPACITANCE IN MICROFARADS (μF) INDUCTANCE IN MICROHENRIES (μH)
3. U6R3 (PINS 5 AND 6) IS NOT USED.
4. THERE IS A 1 VOLT VOLTAGE DROP ACROSS L3 THUS VOLTAGE SUPPLIED TO DPM CIRCUITRY IS +5V.
5. MNEMONIC TABLE:

MNEMONIC	DESCRIPTION
DPMA	DPM INPUT SIGNAL
DPMAG	DPM ANALOG GND
DPMDG	DPM DIGITAL GND
DPMSG	DPM SIGNAL GND

SERIAL PREFIX: 2218A

A1

FIGURE 8-6. DIGITAL PANEL METER ASSEMBLY A1, SCHEMATIC DIAGRAM (SERIAL PREFIX 2218A)

Pages8-25 through 8-49/8-50: FRONT WITCH ASSEMBLY A2

Figure 8-10. Front Switch Assembly A2, Exploded View

2208A & Below	Delete Figure 8-10.
2109A00441 & Below	Add HP Part Number 08558-00021, Check Digit 0, PLATE LEVEL, POT (S1).

Table 8-2. Front Switch Board Assembly A2A1, Replaceable Parts

2208A & Below	Replace Table 8-2 with new Table 8-2 (SERIAL PREFIX 2208A) included in this Manual Backdating supplement.

TABLE 8-2. FRONT SWITCH BOARD ASSEMBLY A2, REPLACEABLE PARTS (1 OF 2) (SERIAL PREFIX 2208A)

Reference Designation	HP Part Number	C D	Qty	Description	Mfr Code	Mfr Part Number
A2	08559-60043	3	1	FRONT PANEL SWITCH ASSEMBLY	28480	08559-60043
A2CR1	1901-0033	2	1	DIODE-GEN PRP 100V 200MA DO-7	28480	1901-0033
A2CR2	1901-0050	3	4	DIODE-SWITCHING 80V 200MA 2NS DO-35	28480	1901-0050
A2CR3	1901-0050	3		DIODE-SWITCHING 80V 200MA 2NS DO-35	28480	1901-0050
A2CR4	1901-0050	3		DIODE-SWITCHING 80V 200MA 2NS DO-35	28480	1901-0050
A2CR5	1901-0050	3		DIODE-SWITCHING 80V 200MA 2NS DO-35	28480	1901-0050
A2J1				PART OF W1		
A2J2				PART OF W2		
A2J3	1200-0508	0	1	SOCKET-IC 14-CONT DIP-SLDR	28480	1200-0508
A2R1	0757-0447	4	1	RESISTOR 16.2K 1% .125W F TC=0+-100	24546	C4-1/8-T0-1622-F
A2R2	2100-3633	7	1	RESISTOR-VAR CONTROL CP 1K 10% LIN	28480	2100-3633
A2R3	2100-3744	1	2	RESISTOR-VAR CONTROL CCP 10K 10% LIN	01121	WP4G024S103UZ
A2R4	2100-3332	3	1	RESISTOR-TRMR 10K 20% CC TOP-ADJ 1-TRN	28480	2100-3332
A2R5	0757-0444	1	1	RESISTOR 12.1K 1% .125W F TC=0+-100	24546	C4-1/8-T0-1212-F
A2R6	2100-3785	0	1	RESISTOR-VAR CONTROL CCP 500 10% LIN	01121	WP4G024S501UZ
A2R7	2100-3786	1	1	RESISTOR-VAR CONTROL CCP 10K 20% 10CW	01121	WP4G024S103RZ
A2R8	0757-0280	3	1	RESISTOR 1K 1% .125W F TC=0+-100	24546	C4-1/8-T0-1001-F
A2R9				NOT ASSIGNED		
A2R10	0757-0317	7	1	RESISTOR 1.33K 1% .125W F TC=0+-100	24546	C4-1/8-T0-1331-F
A2R11	2100-3744	1		RESISTOR-VAR CONTROL CCP 10K 10% LIN	01121	WP4G024S103UZ
A2S1				REFERENCE LEVEL SWITCH (SEE A2 SWITCH PARTS)		
A2S2	3101-2213	0	1	AMPLITUDE SCALE SWITCH	28480	3101-2213
A2S3				SWEEP TIME SWITCH (SEE A2 SWITCH PARTS)		
A2S4				SWEEP TRIGGER SWITCH (SEE A2 SWITCH PARTS)		
A2S5				RESOLUTION BW SWITCH (SEE A2 SWITCH PARTS)		
A2S6				FREQ SPAN/DIV SWITCH (SEE A2 SWITCH PARTS)		
A2S7	3101-2376	6	1	SWITCH-PB 6-STATION 10MM C-C SPACING	28480	3101-2376
A2S8	3101-2124	2	2	SWITCH-PB DPDT ALTNG .25A 115VAC	28480	3101-2124
A2S9	3101-2124	2		SWITCH-PB DPDT ALTNG .25A 115VAC	28480	3101-2124
A2VR1	1902-3172	8	1	DIODE-ZNR 11V 2% DO-35 PD=.4W TC=+.062%	28480	1902-3172
A2W1	08559-60004	6	1	RIBBON CABLE, DPM/REAR SWITCH	28480	08559-60004
A2W2	08559-60003	5	1	RIBBON CABLE, FRONT SWITCH	28480	08559-60003
A2XD1	1200-0010	9	2	SOCKET-TUBE 2-CONT	28480	1200-0010
A2XD2	1200-0010	9		SOCKET-TUBE 2-CONT	28480	1200-0010
				A2 SWITCH PARTS		
	1410-0006	8	8	BALL-BRG TYPE .1875-DIA GRADE-50 SST	78707	GRADE 50
	08565-20049	3	4	BUSHING (S1,S3,S4,S5,S6)	28480	08565-20049
	08558-20089	2	1	BUSHING, SLOTTED (S6)	28480	08558-20089
	1490-0841	7	1	COUPLER, (S1)	28480	1490-0841
	08558-00022	1	1	CRANK, SLOTTED (S1)	28480	08558-00022
	08559-00012	0	1	DETENT, ATTENUATOR (S1)	28480	08559-00012
	08558-00020	9	1	DETENT PLATE (S1)	28480	08558-00020
	08565-00006	0	1	DETENT, SWEEP TIME (S3)	28480	08565-00006
	08558-00025	4	1	DETENT, RESOLUTION BW (S5)	28480	08558-00025
	08558-00024	3	1	DETENT, SWEEP TIME (S3)	28480	08558-00024
	08558-00026	5	1	DETENT, SWEEP TRIGGER (S4)	28480	08558-00026
	08558-20088	1	1	GEAR, 20T (S1)	28480	08558-20088
	1430-0036	6	1	GEAR, METER, 16T 32DP (S1)	71041	G462Y(MOD)
	08558-20058	5	1	HUB, COUPLING (S5, S6)	28480	08558-20058
	08559-60060	4	4	HUB, DRIVE (S1, S3, S4)	28480	08559-60060
	08558-20059	6	2	HUB, DRIVE (S5, S6)	28480	08558-20059
	08558-20062	1	1	LOCKOUT, FIXED (S1)	28480	08558-20062
	08558-20061	0	1	LOCKOUT, ROTATING (S1)	28480	08558-20061
	2950-0006	3	1	NUT, HEX 1/4-32 (S1)	28480	2950-0006
	08559-20007	5	4	NUT-HEX, SPACER (S1, S3, S4, S6)	28480	08559-20007
	1480-0367	1	10	PIN, DOWEL, .062DIA (S1, S4, S5, S6)	28480	1480-0367
	1480-0059	8	1	PIN, ROLL .062DIA (S1)	28480	1480-0059
	08558-00021	0	1	PLATE LEVEL, POT (S1)	28480	08558-00021
	08558-20043	8	1	ROTOR ASSY, ATTENUATOR (S1)	28480	08558-20043
	08558-40005	4	3	ROTOR, DOUBLE CONTACT (S1, S4, S6)	28480	08558-40005
	08558-20066	5	1	ROTOR, FREQ SPAN (S6)	28480	08558-20066
	08558-20108	6	1	ROTOR, SWEEP TIME	28480	08558-20108
	0510-0015	0	3	RTNR-R .125 OD (S3, S5)	28480	0510-0015
	0510-0053	6	2	RTNR-R .188 OD (S1)	28480	0510-0053
	1410-1860	4	5	SPR CPR .180LG (S1, S3, S4, S5, S6)	28480	1410-1860

See introduction to this section for ordering information
*Indicates factory selected value

TABLE 8-2. FRONT SWITCH BOARD ASSEMBLY A2, REPLACEABLE PARTS (2 OF 2) (SERIAL PREFIX 2218A)

Reference Designation	HP Part Number	C D	Qty	Description	Mfr Code	Mfr Part Number
	08559-20009	7	1	SHAFT, DRIVE, ATTENUATOR (S1)	28480	08559-20009
	08559-20012	2	1	SHAFT, FREQ SPAN (S6)	28480	08559-20012
	08559-20046	2	1	SHAFT, FIXED, REF LEVEL (S1)	28480	08559-20046
	08558-20055	2	1	SHAFT, MAN SWEEP (S4)	28480	08558-20055
	08565-20045	9	1	SHAFT, REF LEVEL (S1)	28480	08565-20045
	08559-20010	0	1	SHAFT, REF LEVEL FINE (S1)	28480	08559-20010
	08559-20011	1	1	SHAFT, RESOLUTION BW (S5)	28480	08559-20011
	08558-20049	4	1	SHAFT, SWEEP TIME (S3)	28480	08558-20049
	08558-20048	3	1	SHAFT, SWEEP TRIGGER (S4)	28480	08558-20048
	0380-0413	5	3	SPACER 1.250L .1141D (S1)	28480	0380-0413
	0380-0411	3	14	SPACER .500L .1141D (S1, S3, S4, S5, S6)	28480	0380-0411
	08558-20139	3	1	SPACER ROTOR (S5)	28400	08558-20139
	1460-0623	0	4	SPR CCR .1800D (S1, S3, S4, S5, S6)	28480	1460-0623
	1460-0532	0	1	SPR CPR .5400D (S1)	28480	1460-0532
	1460-0537	5	1	SPR TRS 1.100LG (S4)	28480	1460-0537
	1460-1376	2	1	SPR TRS 1.476LG (S6)	28480	1460-1376
	08558-00053	8	1	STOP ARM TRIGGER (S4)	28480	08558-00053
				A2 MISCELLANEOUS PARTS		
	2190-0016	3	4	WASHER LK INTL T 3/8 IN .377 ■ ■	28480	2190-0016
	2190-0019	6	14	WASHER LK HLCL NO. 4 .115 IN ID	28480	2190-0019
	2190-0067	4	1	WASHER-LK INTL T 1/4 IN .256 IN-ID	28480	2190-0067
	2190-0390	6	1	WASHER-FL NM 1/4 IN .26 IN ID .562 IN OD	28480	2190-0390
	2190-0724	0	8	WASHER LK 82 CTSK EXT T NO. 4 .116 IN ID	28480	2190-0724
	2200-0103	2	1	SCREW MACH 4 40 .25 IN LG PAN HD-POZI	28480	2200-0103
	2200-0119	0	3	SCREW MACH 4-40 1 IN-LG PAN HD-POZI	28480	2200-0119
	2200-0125	8	1	SCRFW MACH 4-40 1.5 IN-LG PAN-HD-POZI	28480	2200-0125
	2200-0140	7	2	SCREW MACH 4 40 .25 IN LG 100 DEG	28480	2200-0140
	2200-0149	6	2	SCREW MACH 4-40 .675-IN LC PAN HD-POZI	28480	2200-0149
	2200-0151	0	3	SCREW MACH 4 40 .75 IN-LG PAN-HD-POZI	28480	2200-0151
	2200-0153	2	1	SCRFW MACH 4-40 .875-IN-LG PAN-HD-POZI	28480	2200-0153
	2200-0155	4	1	SCREW MACH 4-40 1 ■ N-LG PAN HD POZ ■	20400	2200-0155
	2200-0164	5	4	SCREW MACH 4-40 .188 ■ N-LG UNCT 82 DEG	28480	2200-0164
	2200-0165	6	6	SCRCU-MACH 4-40 .25-IN-LG 82 DEG	28480	2200-0165
	2200-0168	9	3	SCREW MACH 4-40 .438-IN-LG 82 DEG	28480	2200-0168
	2200-0509	2	1	SCREW MACH 4-40 1.625 ■N-LG PAN-HD POZI	28480	2200-0509
	2200-0781	2	3	SCRCU MACH 4-40 2.75-IN-LG PAN-HD-POZI	28480	2200-0781
	2260-0001	5	15	NUT-HFX-DBL-CHAM 4 40-THD .094-IN-THK	28480	2260-0001
	2260-0002	6	2	NUT-HEX-DBL-CHAM 4-40-THD .062-IN-THK	28480	2260-0002
	3030-0007	5	20	SCRFU-SET 4-40 .125-IN-LC SMALL CUP-PT	28480	3030-0007
	3030-0051	9	2	SCREU-SET 4-40 .094-IN-LC SMALL CUP PT	28480	3030-0051
	3030-0145	2	4	SCREU SET 6-32 .125 IN-LG FLAT PT ALY	28480	3030-0145
	3050-0011	3	1	WASHER-FL NM NO. 5 .13-IN ■ .25-IN-OD	78400	3050-0011
	3050-0017	9	4	WASHER-FL MTLC 1/4 IN .26-IN-ID	28480	3050-0017
	3050-0032	8	1	UASHER-FL MTLC NO. 8 .189ND	28480	3050-0032
	3050-0105	6	11	UACHFR-FL MTLC NO. 4 .125-IN-ID	20480	3050-0105
	3050-0124	9	5	UASHER-FL MTLC NO. 5 .13 .IN-ID	28480	3050-0124
	08559-00022	2	1	MYLAR CABLE SHIELD	28480	08559-00022

See introduction to this section for ordering information
*Indicates factory selected value

Pages 8-51 through **8-65/8-66: YIG-TUNED** OSCILLATOR **ASSEMBLY** A6

Table 8-3 **RF** Section, Replaceable Parts

2240A & Below — Add **A5MP3,** HP Part Number 08559-20041, Check Digit 7, COVER, 2ND L.O.
Under Miscellaneous Parts:
Change the quantity of HP Part Number 2200-0119 from 7 to 9.
Delete HP Part Number 2200-0156.

2236A & Below — Change A5 to HP Part Number 08559-60005, Check Digit 7.
Change **A5MP2** to HP Part Number 08559-20002, Check Digit **0,** CAVITY BLOCK.
Change A6 to HP Part Number 5086-7301, Check Digit 5.
Add HP Part Number **08559-00033,** YTO SHIELD.

1951A00285 & Below — **NOTE**
The following components have preferred replacements; **A5C4** and **A5L2.** If the instrument does not contain the preferred replacement values, as shown in this Replaceable Parts list and Schematic in the Manual, then both components should be changed at the same time.

1951A, 1945A & Below — Change **A5CR2** and **A5CR3** to HP Part Number **0122-0078,** Check Digit 2, DIODE-VVC **BVR=30V Q=225-MIN.**

1909A & Below — Change **A5L3** to HP Part Number 08559-00020, Check Digit 0, COUPLING LOOP INPUT.

Figure 8-21 **2nd** Converter, **Component** Locations

2236A & Below — Delete Front YIG Mounting Bracket, HP Part Number 08559-00035.
Delete Rear YIG Mounting Bracket, HP Part Number 08559-00036.

NOTE

Prior to **2236A** serial prefix, the **YIG-Tuned** Oscillator Assembly A6 **was mounted** to the side gusset.

Figure 8-22 YIC-Tuned Oscillator Assembly A6 and Shielded **Components**

2236A & Below — Delete Figure 8-22.

Figure 8-25 **RF** Section, Schematic Diagram

2236A & Below — Replace appropriate sections of Figure 8-25 with new P/O Figure 8-25 (SERIAL PREFIX **2236A**) included in this Manual Backdating supplement.

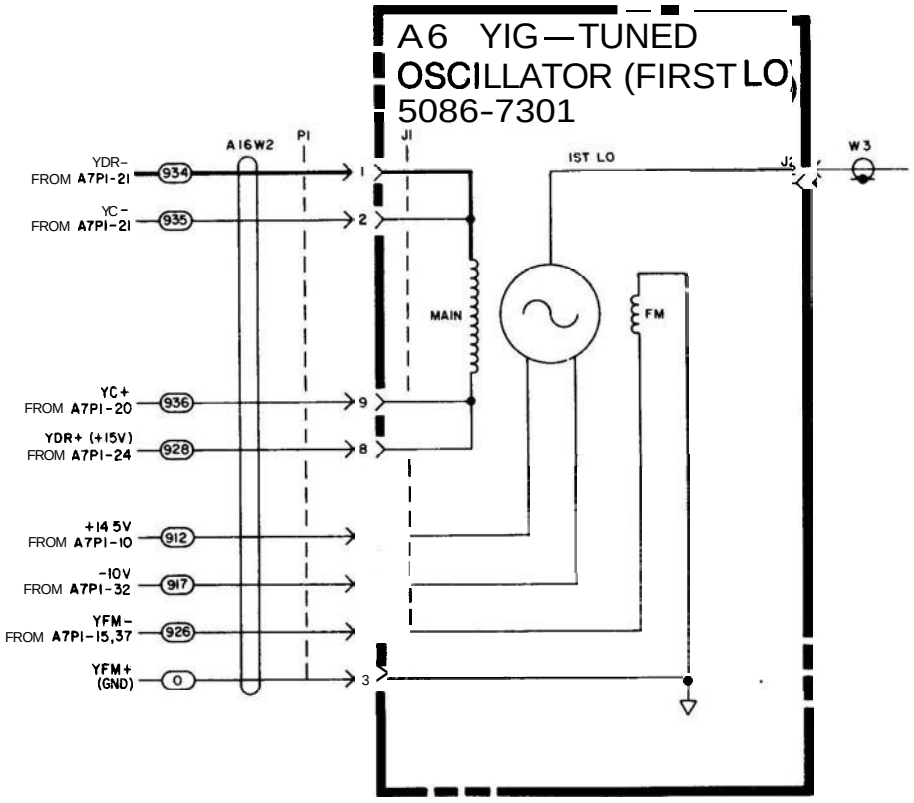

P/O FIGURE 8-25. RF SECTION, SCHEMATIC DIAGRAM (SERIAL PREFIX 2236A)

Pages 8-67 through 8-81/8-82: **FREQUENCY CONTROL ASSEMBLY** A7

Table **8-4.** Frequency Control Assembly **A7,** Replaceable Parts

2236A & Below — Replace Table 8-4 with new Table 8-4 (SERIAL PREFIX **2236A**) included in this Manual Backdating supplement.

2208A & Below — Make the following changes to new Table 8-4 (SERIAL PREFIX **2236A**):
- Change A7 to HP Part Number 08559-60021, Check Digit 7.
- Add **A7C1** and **A7C2,** HP Part Number **0180-2208,** Check Digit 6, CAPACITOR-FXD **220UF +-10% 10VDC TA.**
- Add **A7C11,** HP Part Number 0160-2055, Check Digit 9, CAPACITOR-FXD **.01UF +80-20% 100VDC** CER.
- Delete the following:
  A7C13, A7C14, A7CR8, A7CR9, A7Q19, and **A7Q20.**
- Change **A7R30** to HP Part Number **0698-3428,** Check Digit 1, RESISTOR 14.7 1%**.125W** F **TC=0+-100.**
- Change **A7R31** to HP Part Number **0757-0199,** Check Digit 3, RESISTOR **21.5K** 1%**.125W** F **TC=0+-100.**
- Add **A7R98,** HP Part Number **0757-0465,** Check Digit 6, RESISTOR **100K** 1%**.125W** F **TC=0+-100.**
- Delete the following:
  A7R100, A7R101, A7R102, A7U12, and **A7VR1.**
- Add **A7W1,** HP Part Number **8159-0005,** Check Digit **0,** WIRE **22AWG** W PVC **1X22 80C.**

2004A & Below — Delete **A7R99.**

Figure 8-28. Frequency Control **Assembly** A7, **Component** Locations

2236A & Below — Replace Figure 8-28 with new Figure 8-28 (SERIAL PREFIX **2236A**) included in this Manual Backdating supplement.

2208A & Below — Replace Figure 8-28 with new Figure 8-28 (SERIAL PREFIX **2208A**) included in this Manual Backdating supplement.
Add the following to Figure 8-28 (SERIAL PREFIX **2208A**):
- Add C12 between TP2 and the negative **(-)** side of C8.
- Add **R99** to the left of TP7.

2004A & Below — Delete **A7R99.**

Figure 8-29. Frequency Control Assembly **A7,** Schematic Diagram **(1** of **2)**

2236A & Below — Replace Figure 8-29 **(1** of **2)** with new Figure 8-29 (1 of **2)** (SERIAL PREFIX **2236A**) included in this Manual Backdating supplement.

2208A & Below — Make the following changes to Figure 8-29 **(1** of **2)** (SERIAL PREFIX **2236A**):
- Change A7 to HP Part Number 08559-60021.
- In function block **(A),** add **R98, 100K,** as follows:
  - Open the **FM/MAIN** lice at the left side of R33.
  - Connect one side of R98 to the left side of R33.
  - Connect the other side of R98 to the **FM/MAIN** line.

Figure 8-29. Frequency Control Assembly A7, Schematic Diagram (1 of 2) (COG~'~)

2004A & Below — Make the following changes in function block (A):
Delete R99.
Connect pin 7 of U10B to pin 10 of U10C.

Figure 8-29. Frequency Control Assembly A7, Schematic Diagram (2 of 2)

2236A & Below — Replace Figure 8–29 (2 of 2) with new Figure 8–29 (2 of 2) (SERIAL PREFIX 2236A) included in this Manual Backdating supplement.

2208A & Below — Make the following changes to Figure 8–29 (2 of 2) (SERIAL PREFIX 2236A):
Change A7 to HP Part Number 08559-60021.
Replace function block (E) with P/O Figure 8–29 (SERIAL PREFIX 2208A) included in this Manual Backdating supplement.
In function block (G), delete C14 and R102.

TABLE 8-4. FREQUENCY CONTROL ASSEMBLY A7, REPLACEABLE PARTS (1 OF 3) (SERIAL PREFIX 2236A)

Reference Designation	HP Part Number	C D	Qty	Description	Mfr Code	Mfr Part Number
A7	08559-60068	2	1	FREQUENCY CONTROL BOARD	28480	08559-60068
A7C3*	0180-0291	3	2	CAPACITOR-FXD 1UF+-10% 35VDC TA	56289	150D105X9035A2
A7C4	0180-2141	6	1	CAPACITOR-FXD 3.3UF+-10% 50VDC TA	56289	150D335X9050B2
A7C5	0160-3457	7	1	CAPACITOR-FXD 2000PF +-10% 250VDC CER	28480	0160-3457
A7C6	0160-4084	8	2	CAPACITOR-FXD .1UF +-20% 50VDC CER	28480	0160-4084
A7C7	0180-0197	8	1	CAPACITOR-FXD 2.2UF+-10% 20VDC TA	56289	150D225X9020A2
A7C8	0180-2207	5	1	CAPACITOR-FXD 100UF+-10% 10VDC TA	56289	150D107X9010R2
A7C9	0180-1746	5	2	CAPACITOR-FXD 15UF+-10% 20VDC TA	56289	150D156X9020B2
A7C10	0180-1746	5		CAPACITOR-FXD 15UF+-10% 20VDC TA	56289	150D156X9020B2
A7C12	0180-0291	3		CAPACITOR-FXD 1UF+-10% 35VDC TA	56289	150D105X9035A2
A7C13	0160-4084	8		CAPACITOR-FXD .1UF +-20% 50VDC CER	28480	0160-4084
A7C14	0140-0198	5	1	CAPACITOR-FXD 200PF +-5% 300VDC MICA	72136	DM15F201J0300WV1CR
A7CR1	1901-0040	1	6	DIODE-SWITCHING 30V 50MA 2NS DO-35	28480	1901-0040
A7CR2	1901-0040	1		DIODE-SWITCHING 30V 50MA 2NS DO-35	28480	1901-0040
A7CR3	1901-0050	3	1	DIODE-SWITCHING 80V 200MA 2NS DO-35	28480	1901-0050
A7CR4	1901-0040	1		DIODE-SWITCHING 30V 50MA 2NS DO-35	28480	1901-0040
A7CR5	1901-0040	1		DIODE-SWITCHING 30V 50MA 2NS DO-35	28480	1901-0040
A7CR6	1901-0040	1		DIODE-SWITCHING 30V 50MA 2NS DO-35	28480	1901-0040
A7CR7	1901-0040	1		DIODE-SWITCHING 30V 50MA 2NS DO-35	28480	1901-0040
A7CR8	1901-0518	8	2	DIODE-SM SIG SCHOTTKY	28480	1901-0518
A7CR9	1901-0518	8		DIODE-SM SIG SCHOTTKY	28480	1901-0518
A7J1	1251-4700	9	1	CONNECTOR 3-PIN M POST TYPE	28480	1251-4700
A7L1	08558-80011	6	2	FILTER, COIL, BLUE	28480	08558-80011
A7L2	08558-80011	6		FILTER, COIL, BLUE	28480	08558-80011
A7Q1	1854-0637	1	4	TRANSISTOR NPN 2N2219A SI TO-5 PD=800MW	01295	2N2219A
A7Q2	1854-0637	1		TRANSISTOR NPN 2N2219A SI TO-5 PD=800MW	01295	2N2219A
A7Q3	1853-0213	7	1	TRANSISTOR PNP 2N4236 SI TO-5 PD=1W	04713	2N4236
A7Q4				NOT ASSIGNED		
A7Q5	1855-0251	7	1	TRANSISTOR MOSFET N-CHAN E-MODE TO-39 SI	28480	1855-0251
A7Q6	1854-0404	0	2	TRANSISTOR NPN SI TO-18 PD=360MW	28480	1854-0404
A7Q7	1854-0023	9	1	TRANSISTOR NPN SI TO-18 PD=360MW	28480	1854-0023
A7Q8	1854-0637	1		TRANSISTOR NPN 2N2219A SI TO-5 PD=800MW	01295	2N2219A
A7Q9	1853-0281	9	4	TRANSISTOR PNP 2N2907A SI TO-18 PD=400MW	04713	2N2907A
A7Q10	1855-0421	3	2	TRANSISTOR J-FET 2N5114 P-CHAN D-MODE	17856	2N5114
A7Q11	1853-0281	9		TRANSISTOR PNP 2N2907A SI TO-18 PD=400MW	04713	2N2907A
A7Q12	1853-0281	9		TRANSISTOR PNP 2N2907A SI TO-18 PD=400MW	04713	2N2907A
A7Q13	1855-0421	3		TRANSISTOR J-FET 2N5114 P-CHAN D-MODE	17856	2N5114
A7Q14	1853-0281	9		TRANSISTOR PNP 2N2907A SI TO-18 PD=400MW	04713	2N2907A
A7Q15	1855-0417	7	1	TRANSISTOR J-FET N-CHAN D-MODE TO-18 SI	28480	1855-0417
A7Q16	1854-0637	1		TRANSISTOR NPN 2N2219A SI TO-5 PD=800MW	01295	2N2219A
A7Q17	1853-0314	9	1	TRANSISTOR PNP 2N2905A SI TO-39 PD=600MW	04713	2N2905A
A7Q18	1854-0404	0		TRANSISTOR NPN SI TO-18 PD=360MW	28480	1854-0404
A7Q19	1855-0278	8	1	TRANSISTOR J-FET 2N5116 P-CHAN D-MODE	17856	2N5116
A7Q20	1855-0420	2	1	TRANSISTOR J-FET 2N4391 N-CHAN D-MODE	01295	2N4391
A7R1	0698-3260	9	4	RESISTOR 464K 1% .125W F TC=0+-100	28480	0698-3260
A7R2	0698-3160	8	1	RESISTOR 31.6K 1% .125W F TC=0+-100	24546	C4-1/8-T0-3162-F
A7R3	0757-0280	3	3	RESISTOR 1K 1% .125W F TC=0+-100	24546	C4-1/8-T0-1001-F
A7R4	0698-3260	9		RESISTOR 464K 1% .125W F TC=0+-100	28480	0698-3260
A7R5	0698-3260	9		RESISTOR 464K 1% .125W F TC=0+-100	28480	0698-3260
A7R6	0757-0465	6	14	RESISTOR 100K 1% .125W F TC=0+-100	24546	C4-1/8-T0-1003-F
A7R7	0757-0438	3	5	RESISTOR 5.11K 1% .125W F TC=0+-100	24546	C4-1/8-T0-5111-F
A7R8	0757-0465	6		RESISTOR 100K 1% .125W F TC=0+-100	24546	C4-1/8-T0-1003-F
A7R9	0698-3260	9		RESISTOR 464K 1% .125W F TC=0+-100	28480	0698-3260
A7R10	0757-0465	6		RESISTOR 100K 1% .125W F TC=0+-100	24546	C4-1/8-T0-1003-F
A7R11	0757-0465	6		RESISTOR 100K 1% .125W F TC=0+-100	24546	C4-1/8-T0-1003-F
A7R12	0757-0442	9	12	RESISTOR 10K 1% .125W F TC=0+-100	24546	C4-1/8-T0-1002-F
A7R13	0757-0442	9		RESISTOR 10K 1% .125W F TC=0+-100	24546	C4-1/8-T0-1002-F
A7R14	0699-0903	3	7	RESISTOR 10K .1% .1W F TC=0+-10	28480	0699-0903
A7R15	0699-0903	3		RESISTOR 10K .1% .1W F TC=0+-10	28480	0699-0903
A7R16	0699-0903	3		RESISTOR 10K .1% .1W F TC=0+-10	28480	0699-0903
A7R17	0699-0903	3		RESISTOR 10K .1% .1W F TC=0+-10	28480	0699-0903
A7R18	0698-3456	5	2	RESISTOR 287K 1% .125W F TC=0+-100	24546	C4-1/8-T0-2873-F
A7R19	0698-3442	9	1	RESISTOR 237 1% .125W F TC=0+-100	24546	C4-1/8-T0-237R-F
A7R20	0757-0442	9		RESISTOR 10K 1% .125W F TC=0+-100	24546	C4-1/8-T0-1002-F
A7R21	0757-0442	9		RESISTOR 10K 1% .125W F TC=0+-100	24546	C4-1/8-T0-1002-F
A7R22	0757-0441	8	1	RESISTOR 8.25K 1% .125W F TC=0+-100	24546	C4-1/8-T0-8251-F
A7R23	0757-0438	3		RESISTOR 5.11K 1% .125W F TC=0+-100	24546	C4-1/8-T0-5111-F
A7R24	0757-0123	3	2	RESISTOR 34.8K 1% .125W F TC=0+-100	28480	0757-0123
A7R25	0757-0419	0	1	RESISTOR 681 1% .125W F TC=0+-100	24546	C4-1/8-T0-681R-F

See introduction to this section for ordering information
*Indicates factory selected value

TABLE 8-4. FREQUENCY CONTROL ASSEMBLY A7, REPLACEABLE PARTS (2 OF 3) (SERIAL PREFIX 2236A)

Reference Designation	HP Part Number	C D	Qty	Description	Mfr Code	Mfr Part Number
A7R26	0757-0279	0	2	RESISTOR 3.16K 1% .125W F TC=0+ 100	24546	C4-1/8-T0-3161-F
A7R27	0811-3492	1	1	RESISTOR 133 1% 12U PW TC=0+-2	211480	0811-3492
A7R28	2100-1753	8	1	RESISTOR TRMR 20 5% WW SIDE ADJ 1 TRN	28480	2100-1753
A7R29	0698-3157	3	2	RESISTOR 19.6K 1% .125W F TC=0+-100	24546	C4-1/8-T0-1962-F
A7R30	0757-0442	9		RESISTOR 10K 1% .125W F TC=0+-100	24546	C4-1/8-T0-1002-F
A7R31	0757-0442	9		RESISTOR 10K 1% .125W F TC=0+-100	24546	C4-1/8-T0-1002-F
A7R32	0698-3157	3		RESISTOR 19.6K 1% .125W F TC=0+ 100	24546	C4-1/8-T0-1962-F
A7R33	0757-0465	6		RESISTOR IOOK 1% .125W F TC=0+-100	74546	C4-1/8-T0-1003-F
A7R34	0757-0442	9		RESISTOR 10K 1% 125W F TC=0+-100	24546	C4-1/8-T0-1002-F
A7R35	0757-0290	5	2	RESISTOR 6.19K 1% .125W F TC=0+-100	19701	MF4C1/8-T0-6191-F
A7R36	0757-0290	5		RESISTOR 6.19K 1% .125W F TC=0+-100	19701	MF4C1/8-T0-6191-F
A7R37	0757-0401	0	1	RESISTOR 100 1% .125W F TC=0+-100	74546	C4-1/8-T0-101-F
A7R38	2100-1756	1	1	RESISTOR- TRHR 200 5% WW SIDE ADJ I-TRN	28480	2100-1756
A7R39	0757-0795	5	1	RESISTOR 75 1% .5W F TC=0+-100	19701	MF-1/2-T0-75R0-F
A7R40	0698-6360	6	1	RESISTOR 10K .1% .125W F TC=0+-25	78400	0698-6360
A7R41	0699-0900	0	1	RESISTOR 12.4K .1% .1W F TC=0+-10	28480	0699-0900
A7R42	0757-0280	3		RESISTOR 1K 1% .125W F TC=0+-100	24546	C4-1/8-T0-1001-F
A7R43	0757-0442	9		RESISTOR 10K 1% .125W F TC=0+-100	24546	C4-1/8-T0-1002-F
A7R44				NOT ASSIGNED		
A7R45	0811-1003	6	1	RESISTOR 50 1% 12W PU	28480	0811-1003
A7R46	0757-0442	9		RESISTOR 10K 1% .125W F TC=0+-100	24546	C4-1/8-T0-1002-F
A7R47	0757-0424	7	1	RESISTOR 1.1K 1% .125W F TC=0+-100	714546	C4-1/8-T0-1101-F
A7R48	0699-0903	3		RESISTOR 10K .1% .1W F TC=0+-10	28480	0699-0903
A7R49	0699-0903	3		RESISTOR 10K .1% .1W F TC=0+-10	20400	0699-0903
A7R50	0698-0083	8	1	RESISTOR 1.96K 1% .125W F TC=0+-100	24546	C4-1/8-T0-1961-F
A7R51	0811-1175	3	1	RESISTOR 4.22K 1% .125W PWW TC=0+-10	07008	KP61-4221-1
A7R52	2100-3123	0	1	RESISTOR-TRHR 500 10% C SIDE-ADJ 17 TRN	02111	43P501
A7R53	0811-3053	0	1	RESISTOR 3.16K 1% .125W PWU TC=0+-10	20940	114-1/8-D-3161-F
A7R54	0699-0903	3		RESISTOR 10K .1% .1W F TC=0+ 10	28480	0699-0903
A7R55	2100-2851	9	2	RESISTOR-TRHR 2K 10% WW SIDE-ADJ 20 TRN	02660	3810P-202
A7R56	0699-0901	1	1	RESISTOR 33.5K .1% .1W F TC=0+-10	28480	0699-0901
A7R57	0757-0438	3		RESISTOR 5.11K 1% .125W F TC=0+-100	24546	C4-1/8-T0-5111-F
A7R58	0757-0440	7	1	RESISTOR 7.5K 1% .125W F TC=0+-100	24546	C4-1/8-T0-7501-F
A7R59	0698-3153	9	1	RESISTOR 3.83K 1% .125W F TC=0+-100	24546	C4-1/8-T0-3831-F
A7R60	0757-0464	5	1	RESISTOR 90.9K 1% .125W F TC=0+-100	24546	C4-1/8-T0-9092-F
A7R61	0698-7929	5	1	RESISTOR 9.09K .1% .125W F TC=0+-50	19701	MF4C1/8-T2-9091-B
A7R62	0757-0202	9	1	RESISTOR 13.7K 1% .125W F TC=0+-50	28480	0757-0202
A7R63	0698-8657	8	1	RESISTOR 6.81K .1% .125W F TC=0+-50	28480	0698-8657
A7R64	0698-3532	8	1	RESISTOR 18.2K .5% .125W F TC=0+-100	03888	PME55-1/8-T0-1822-D
A7R65	0698-6847	4	1	RESISTOR 6.04K .5% .125W F TC=0+-50	24546	NC55-1/8-T2-6041-D
A7R66	0698-8608	9	1	RESISTOR 4.525K .1% .125W F TC=0+-25	284110	0698-8608
A7R67	0757-0465	6		RESISTOR 100K 1% .125W F TC=0+-100	24546	C4-1/8-T0-1003-F
A7R68	0757-0442	9		RESISTOR 10K 1% .125W F TC=0+-100	24546	C4-1/8-T0-1002-F
A7R69	0757-0438	3		RESISTOR 5.11K 1% .125W F TC=0+-100	24546	C4-1/8-T0-5111-F
A7R70	0757-0458	7	7	RESISTOR 51.1K 1% .125W F TC=0+-100	24546	C4-1/8-T0-5112-F
A7R71	0757-0279	0		RESISTOR 3.16K 1% .125W F TC=0+-100	24546	C4-1/8-T0-3161-F
A7R72	0757-0438	3		RESISTOR 5.11K 1% .125W F TC=0+-100	24546	C4-1/8-T0-5111-F
A7R73	0757-0123	3		RESISTOR 34.8K 1% .125W F TC=0+-100	20480	0757-0123
A7R74	2100-1758	3	1	RESISTOR-TRMR 1K 5% WW SIDE-ADJ 1-TRN	28480	2100-1758
A7R75	0757-0463	4	1	RESISTOR 82.5K 1% .125W F TC=0+-100	24546	C4-1/8-T0-8252-F
A7R76	0757-0462	3	2	RESISTOR 75K 1% .125W F TC=0+-100	24546	C4-1/8-T0-7502-F
A7R77	0757-0462	3		RESISTOR 75K 1% .125W F TC=0+-100	24546	C4-1/8-T0-7502-F
A7R78	0757-0444	1	1	RESISTOR 12.1K 1% .125W F TC=0+-100	24546	C4-1/8-T0-1212-F
A7R79	0757-0442	9		RESISTOR IOK 1% .125W F TC=0+-100	24546	C4-1/8-T0-1002-F
A7R80	0757-0289	2	1	RESISTOR 13.3K 1% .125W F TC=0+-100	19701	MF4C1/8-T0-1332-F
A7R81	0757-0280	3		RESISTOR IK 1% .125W F TC=0+-100	24546	C4-1/8-T0-1001-F
A7R82	0757-0458	7		RESISTOR 51.1K 1% .125W F TC=0+-100	24546	C4-1/8-T0-5112-F
A7R83	0757-0458	7		RESISTOR 51.1K 1% .125W F TC=0+-100	24546	C4-1/8-T0-5112-F
A7R84	0757-0458	7		RESISTOR 51.1K 1% .125W F TC=0+-100	24546	C4-1/8-T0-5112-F
A7R85	0757-0458	7		RESISTOR 51.1K 1% .125W F TC=0+-100	24546	C4-1/8-T0-5112-F
A7R86	0757-0458	7		RESISTOR 51.1K 1% .125W F TC=0+-100	24546	C4-1/8-T0-5112-F
A7R87	0757-0458	7		RESISTOR 51.1K 1% .125W F TC=0+-100	24546	C4-1/8-T0-5112-F
A7R88	0757-0465	6		RESISTOR 100K 1% .125W F TC=0+-100	24546	C4-1/8-T0-1003-F
A7R89	0757-0465	6		RESISTOR IOOK 1% .125W F TC=0+-100	24546	C4-1/8-T0-1003-F
A7R90	0757-0465	6		RESISTOR IOOK 1% .125W F TC=0+-100	24546	C4-1/8-T0-1003-F
A7R91	0757-0465	6		RESISTOR IOOK 1% .125W F TC=0+-100	24546	C4-1/8-T0-1003-F
A7R92	0757-0465	6		RESISTOR 100K 1% .125W F TC=0+-100	24546	C4-1/8-T0-1003-F
A7R93	0757-0465	6		RESISTOR 100K 1% .125W F TC=0+-100	24546	C4-1/8-T0-1003-F
A7R94*	0698-3452	1	1	RESISTOR 147K 1% .125W F TC=0+-100	24546	C4-1/8-T0-1473-F
A7R95	2100-2851	9		RESISTOR-TRMR 2K 10% UU SIDE-ADS 20-TRN	02660	3810P-202
A7R96	0757-0442	9		RESISTOR 10K 1% .125W F TC-0+-100	24546	C4-1/8-T0-1002-F
A7R97	0698-3456	5		RESISTOR 287K 1% .125W F TC=0+-100	24546	C4-1/8-T0-2873-F
A7R99	2100-3426	6	1	RESISTOR-TRHR 20 10% C SIDE-ADJ I-TRN	28480	2100-3426
A7R100	0757-0465	6		RESISTOR IOOK 1% .125W F TC=0+-100	24546	C4-1/8-T0-1003-F
A7R101	0757-0465	6		RESISTOR IOOK 1% .125W F TC=0+-100	24546	C4-1/8-T0-1003-F

See introduction to this section for ordering information
*Indicates factory selected value

TABLE 8-4. FREQUENCY CONTROL ASSEMBLY A7, REPLACEABLE PARTS (3 OF 3) (SERIAL PREFIX 2236A)

Reference Designation	HP Part Number	C D	Qty	Description	Mfr Code	Mfr Part Number
A7R102	0698-7212	9	1	RESISTOR 100 1% .05W F TC=0+-100	24546	C3-1/8-T0-100R-F
A7TP12	1251-0600	0	12	CONNECTOR-SGL CONT PIN 1.14 MM-BSC 57 SO	28480	1251-0600
A7U1	1826-0229	8	5	IC OP AMP LOW-DRIFT TO-99 PKG	06665	OP-05CJ
A7U2	1826-0102	6	3	IC OP AMP LOW-BIAS-H-IMPD TO-99 PKG	27014	LM312H
A7U3	1826-0229	8		IC OP AMP LOW-DRIFT TO-99 PKG	06665	OP-05CJ
A7U4	1826-0102	6		IC OP AMP LOW-BIAS-H-IMPD TO-99 PKG	27014	LM312H
A7U5	1826-0229	8		IC OP AMP LOW-DRIFT TO-99 PKG	06665	OP-05CJ
A7U6	1826-0229	8		IC OP AMP LOW-DRIFT TO-99 PKG	06665	OP-05CJ
A7U7	1820-1526	8	1	IC DCDR CMOS BCD-TO-DEC 4 TO-10-LINE	04713	MC14028BCL
A7U8	1826-0102	6		IC OP AMP LOW-BIAS-H-IMPD TO-99 PKG	27014	LM312H
A7U9	1858-0023	7	1	TRANSISTOR ARRAY 16-PIN PLSTC DIP	3L585	CA3081E
A7U10	1826-0417	6	1	IC SWITCH ANLG QUAD 16-DIP-C PKG	27014	LF13333D
A7U11	1826-0371	1	1	IC OP AMP LOW-BIAS H-IMPD TO-99 PKG	27014	LF356H
A7U12	1826-0229	8		IC OP AMP LOW-DRIFT TO-99 PKG	06665	OP-05CJ
A7VR1	1902-0579	3	1	DIODE-ZNR 5.1V 5% PD=1W IR=10UA	28480	1902-0579
A7VR2	1902-0625	0	1	DIODE-ZNR 1N829 6.2V 5% DO-7 PD=.25W	04713	1N829
A7VR3	1902-3193	3	1	DIODE-ZNR 13.3V 5% DO-35 PD=.4W	28480	1902-3193
				A7 MISCELLANEOUS PARTS		
	0520-0128	7	4	SCREW MACH 2-56 .25 IN-LG PAN HD POZI	28480	0520-0128
	0510-0001	4	4	THREADED INSERT-NUT 6-32 .062-IN-LG STL	28480	0510-0001
	1205-0095	0	3	HEAT SINK SGL TO 5/TO-39-CS	30161	3225B
	1200-0173	5	3	INSULATOR-XSTR DAP-GL	28480	1200-0173
	2190-0014	1	4	WASHER LK INTL T NO. 2 .089-IN-ID	28480	2190-0014
	2200-0107	6	1	SCREW MACH 4-40 .375 IN-LG PAN HD POZI	28480	2200-0107

See introduction to this section for ordering information
*Indicates factory selected value

A7
FREQUENCYCONTROL

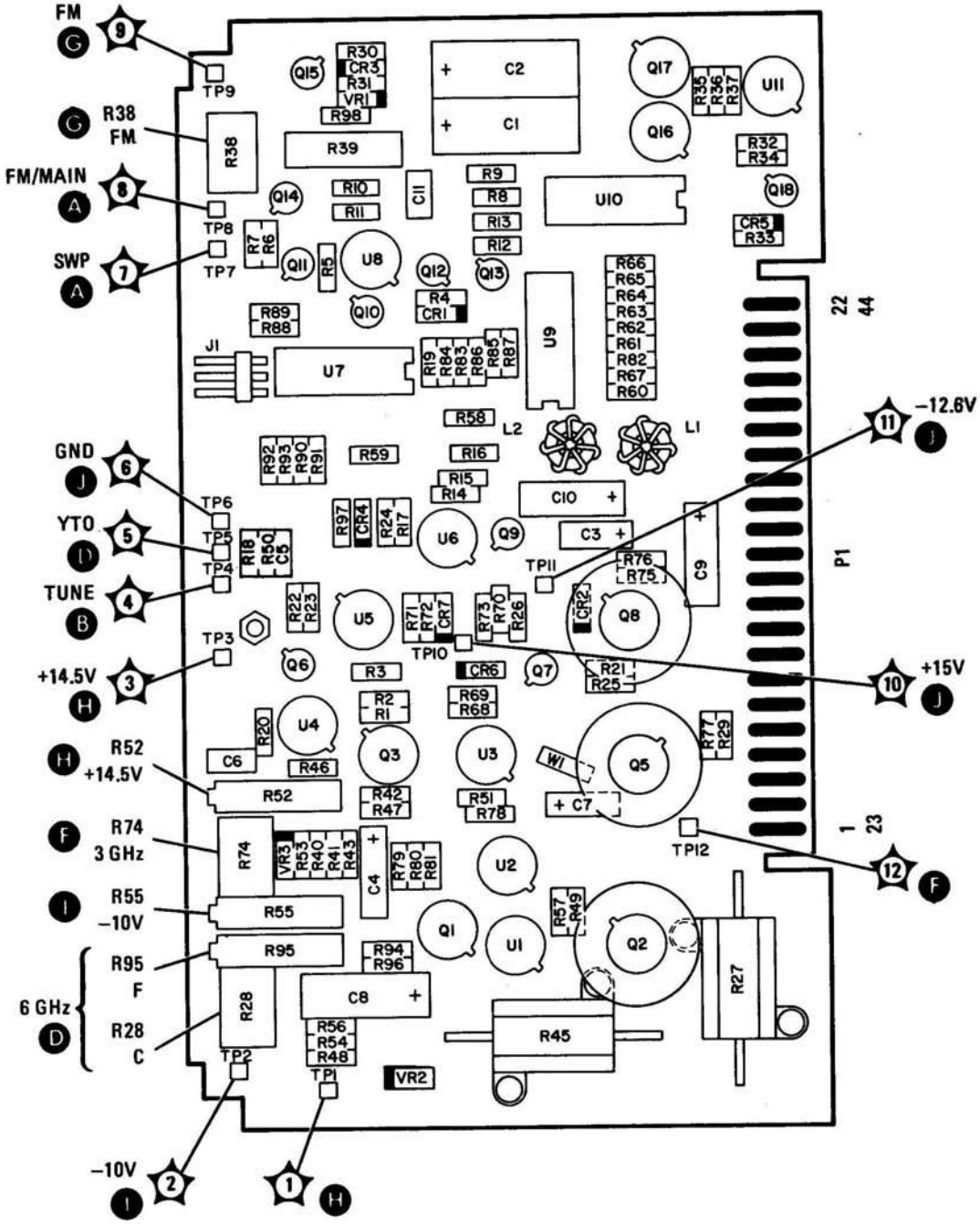

FIGURE 828. FREQUENCY CONTROL ASSEMBLY A7, COMPONENT LOCATIONS (SERIAL PREFIX 2236A)

A7

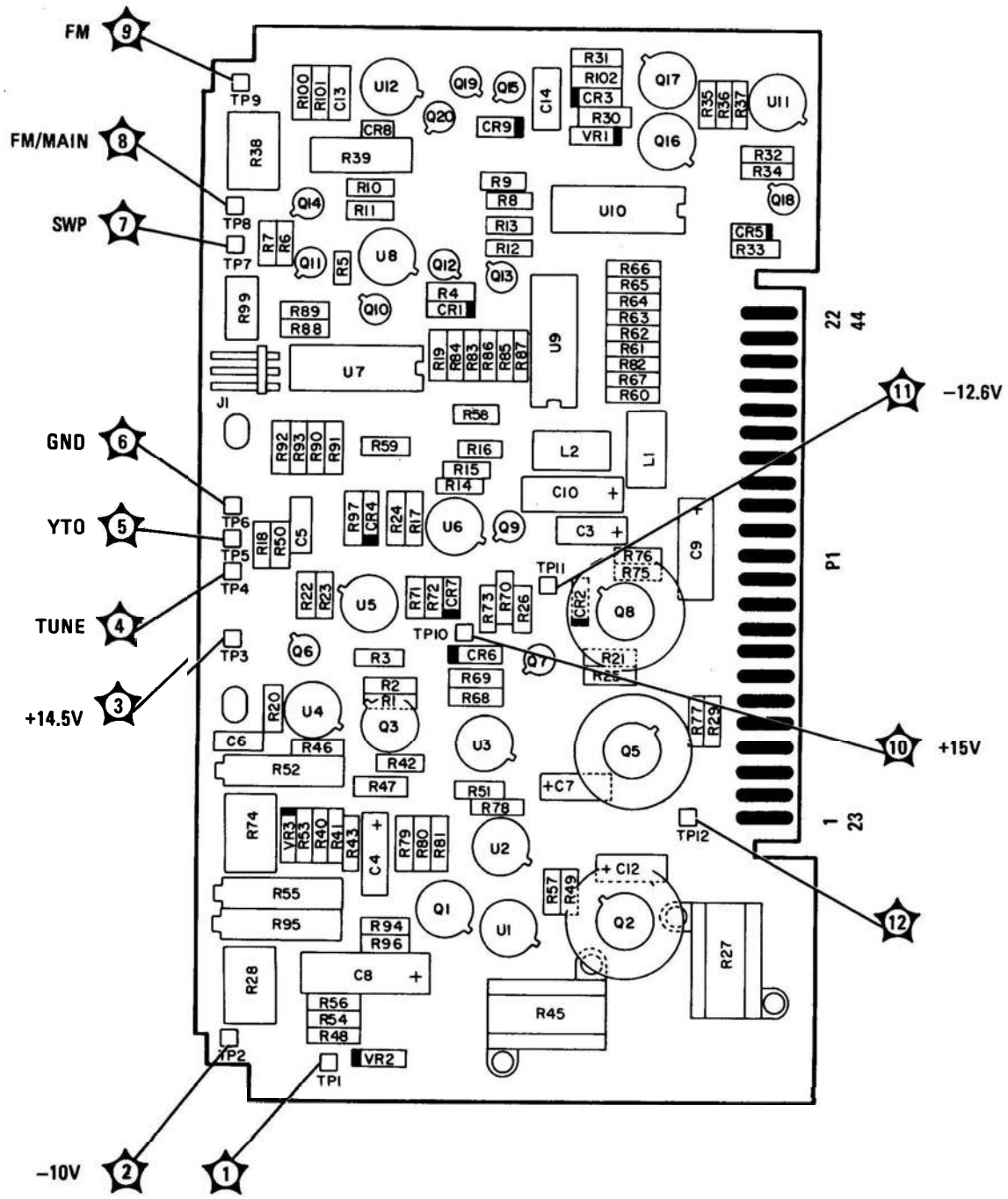

FIGURE 828. FREQUENCY CONTROL ASSEMBLY A7, COMPONENT LOCATIONS (SERIAL PREFIX 2208A)

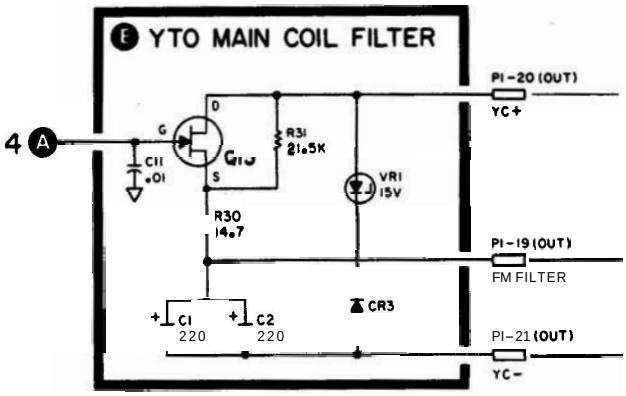

P/O FIGURE 829. FREQUENCY CONTROL ASSEMBLY A7, SCHEMATIC DIAGRAM (SERIAL PREFIX 2208A)

A7 FREQUENCY CONTROL ASSEMBLY
08559-60068(2 OF 2)

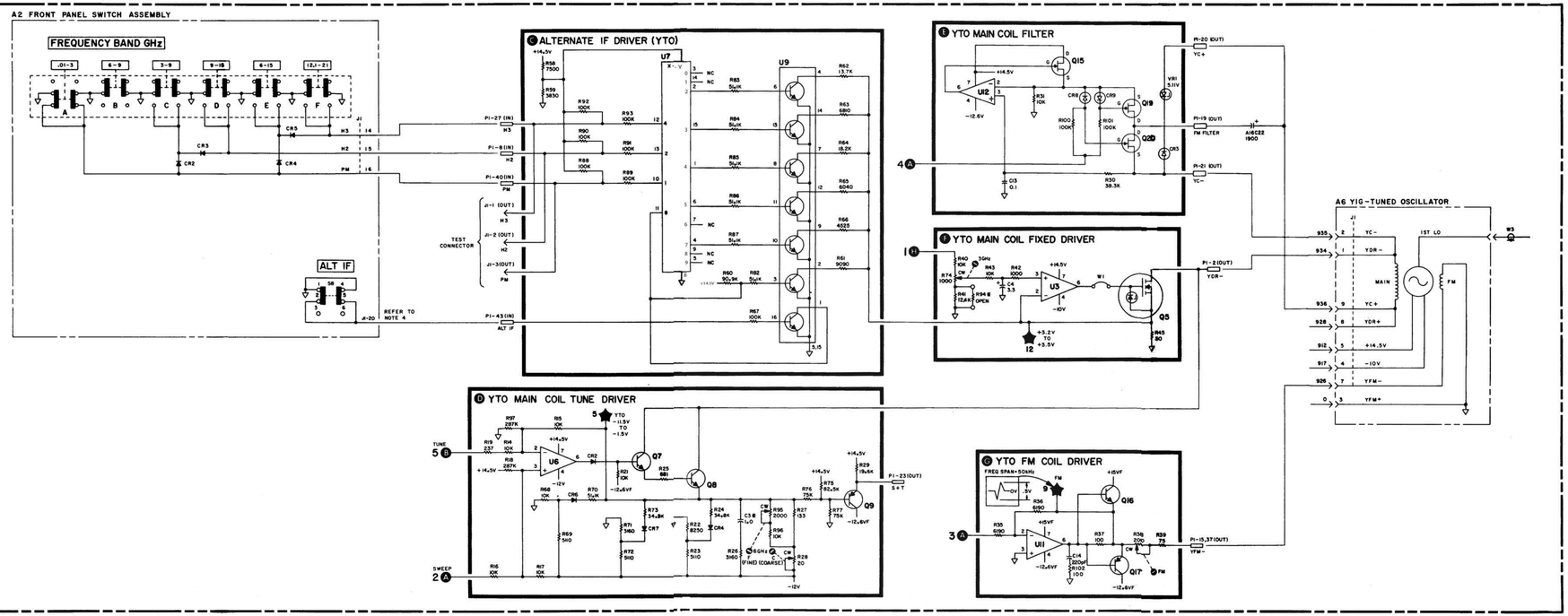

NOTES:

1. REFERENCE DESIGNATORS WITHIN THIS ASSEMBLY ARE ABBREVIATED, PREFIX ABBREVIATION WITH ASSEMBLY NUMBER FOR COMPLETE REFERENCE DESIGNATOR.
2. UNLESS OTHERWISE INDICATED: RESISTANCE IN OHMS (Ω) CAPACITANCE IN MICROFARADS (μF) INDUCTANCE IN MICROHENRIES (μH)
3. * INDICATES FACTORY SELECTED COMPONENT. VALUE SHOWN IS TYPICAL.
4. PULL-UP RESISTOR. FOR ALT IF LINE IS LOCATED ON A8 MARKER.

5. MNEMONIC TABLE

MNEMONIC	DEFINITION
ALT IF	ALTERNATE IF (LOW= ALT IF=3.0025 GHz)
ATTEN SWP	ATTENUATED SWEEP VOLTAGE
C TUNE	COARSE FREQUENCY TUNE
FINE TUNE	FINE FREQUENCY TUNE
FS6	SELECTS YTO
FS9	FM OR MAIN COIL (+15V-FM COIL) SELECTS FULL SPAN OR PER DIVISION. (+15V=FULL SPAN)
H2	SECOND HARMONIC BAND (LOW=TRUE)
H3	THIRD HARMONIC BAND (LOW=TRUE)
PM	SELECTS PLUS OR MINUS HARMONIC CONVERSION
S+T	SWEEP+TUNE VOLTAGE
TUNE	FREQUENCY TUNE VOLTAGE
YC+	YTO MAIN
YC−	COIL FILTER
YDR+	YTO MAIN
YDR−	COIL SIGNAL
YFM−	YTO FM COIL SIGNAL
YTO SWP	YTO SWEEP VOLTAGE

SERIAL PREFIX: 2236A

A7

FIGURE 8-29. FREQUENCY CONTROL ASSEMBLY A7, SCHEMATIC DIAGRAM (2 OF 2) (SERIAL PREFIX 2236A)

Pages 8-83 through 8-95/8-96: MARKER ASSEMBLY A8

Table **8-5. Marker** Assembly **A8,** Replaceable Parts

2309A & Below	Change A8 to HP Part Number 08559-60022, Check Digit 8. Delete **A8C2.** Change **A8R13** to HP Part Number **0757-0438,** Check Digit 3, RESISTOR **5.11K 1% .125W** F **TC=0+-100.** Change **A8R36** to HP Part Number 0757-0466, Check Digit 7, RESISTOR **110K** 1%.**125W** F **TC=0+-100.** Add **A8R82,** HP Part Number **0757-0438,** Check Digit 3, RESISTOR **5.11K 1% .125W** F **TC=0+-100.** Change **A8R108** to HP Part Number **0698-7277,** Check Digit 6, RESISTOR **51.1K** 1%.**125W** F **TC=0+-100.** Delete A8R110. Delete A8R111. Change **A8U4** to HP Part Number 1826-1058, Check Digit 8, IC OP AMP GP **8-TO-99 PKG.**
2152A & Below	Delete **A8CR21.** Change **A8R33, A8R87** and **A8R88** to HP Part Number **0757-0123,** Check Digit 3, RESISTOR **34.8K** 1%.**125W** F **TC=0+-100.** Delete A8R**108.** Delete A8R109.
1945A00241,249, 258,262,265,277: **1951A00283,286, 288-290,292, 295-300; 2003A** & Below	Change **A8R34** and **A8R62** to HP Part Number 2100-0670, Check Digit 6, RESISTOR-TRMR **10K** 10%C SIDE-ADJ 17-TRN. Change **A8R39** to HP Part Number 2100-3754, Check Digit 3, RESISTOR-TRMR **1M 10%** C SIDE-ADJ **17-TRN.** Change **A8R40** to HP Part Number 2100-3752, Check Digit 1, RESISTOR-TRMR **500K** 10%C SIDE-ADJ 17-TRN. Change **A8R61** to HP Part Number 2100-3750, Check Digit 9, RESISTOR-TRMR 20K **10%** C SIDE-ADJ **17-TRN.** Change **A8R94** to **A8R94*.** Change **A8R94*** to HP Part Number **0757-0460,** Check Digit 1, RESISTOR **61.9K** 1%.**125W** F **TC=0+-100.**

Figure 8-32, **Marker Assembly** A8, **Component** Locations

2309A & Below	Replace Figure 8-32 with new Figure 8-32 (SERIAL PREFIX **2309A)** included in this Manual Backdating supplement.
2152A & Below	Make the following changes to new Figure 8-32 (SERIAL PREFIX **2309A):** Delete **A8CR21, A8R108,** and **A8R109.**

Figure 8-33. **Marker** Assembly A8, Schematic Diagram (1 of 2)

2309A & Below	Change A8 to HP Part Number 08559-60022. Replace function block (I) of Figure 8-33 with new P/O Figure 8-33 (1 of 2) (SERIAL PREFIX 2309A) included in this Manual Backdating supplement.
2152A & Below	Make the following changes to new Figure 8-33 (1 of 2) (SERIAL PREFIX 2309A): Change R33 to 34.8K. Change R87 and R88 to 34.8K. Delete the +14.5V supply at R108. Delete R108, R109, and CR21. Connect pin 14 to pin 1 of U2A.
2017A & Below	In the edge connector table for P1, change FUNCTION BLOCK entry for pin 10, -10V, to NC.

Figure 8-33. **Marker** Assembly A8, Schematic Diagram (2 of 2)

2309A & Below	Change A8 to HP Part Number 08559-60022. Replace right half of function block (E) of Figure 8-33 with new P/O Figure 8-33 (2 of 2) (SERIAL PREFIX 2309A) included in this Manual Backdating supplement.
2017A & Below	In function block (D), change -IOV to -12.6V at the wiper of R61 and at pin 4 of U15.
1945A00241,249, 258,262,265,277; 1951A00283,286, 288-290,292, 295-300; 2003A & Below	Make the following changes in function block (E): Change R34 to 10K. Change R62 to 10K. Change R94* to 61.9K.

A8
MARKER

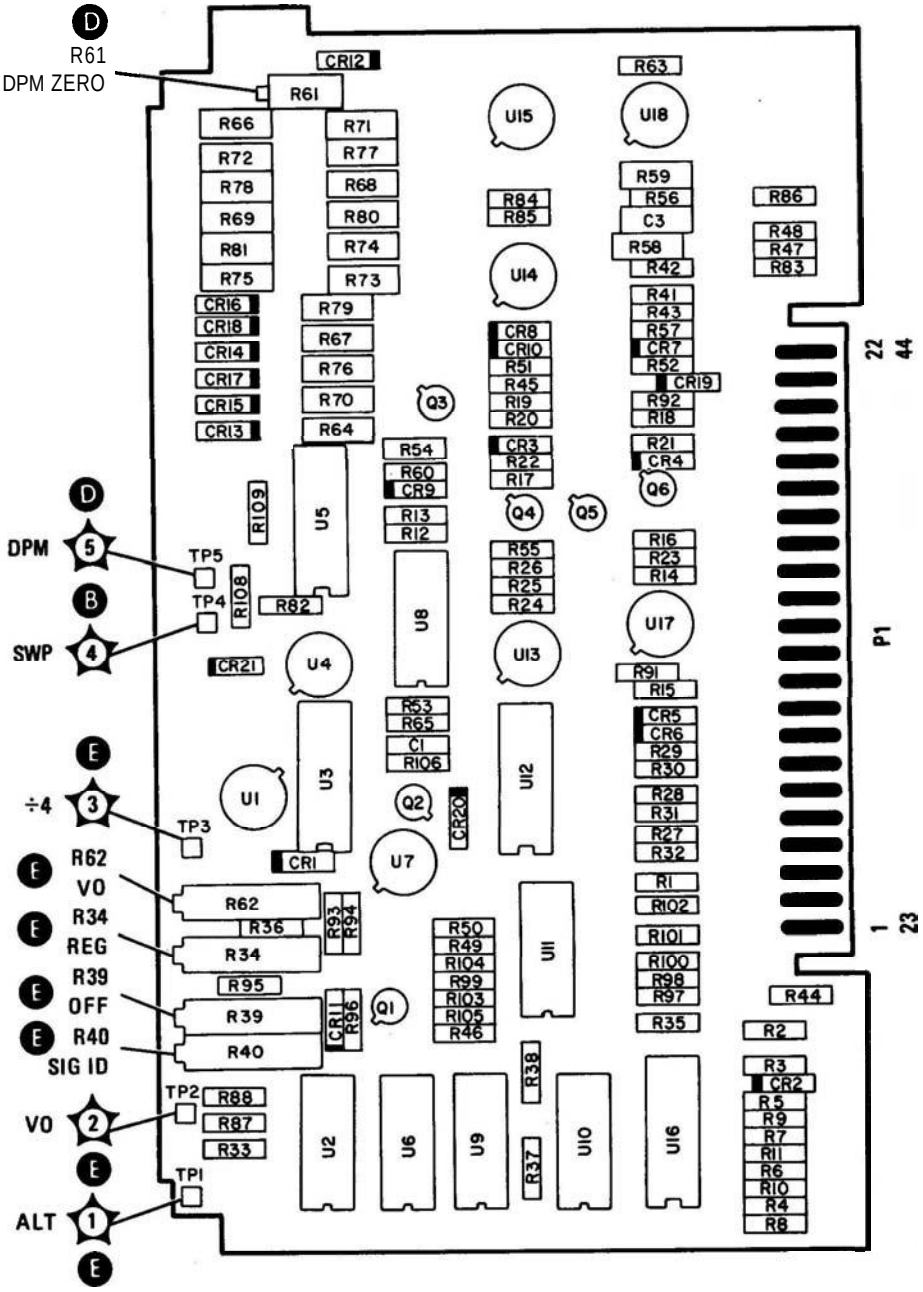

FIGURE 8-32. MARKER ASSEMBLY A8, COMPONENT LOCATIONS (SERIAL PREFIX 2309A)

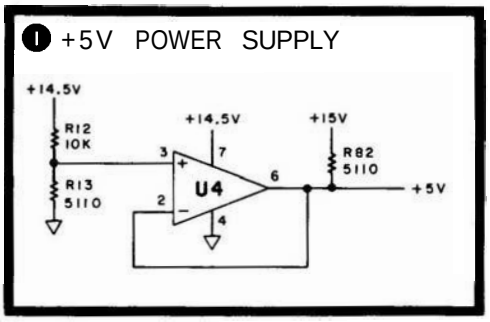

P/O FIGURE 8-33. MARKER ASSEMBLY A8, SCHEMATIC DIAGRAM (1 OF 2) (SERIAL PREFIX 2309A)

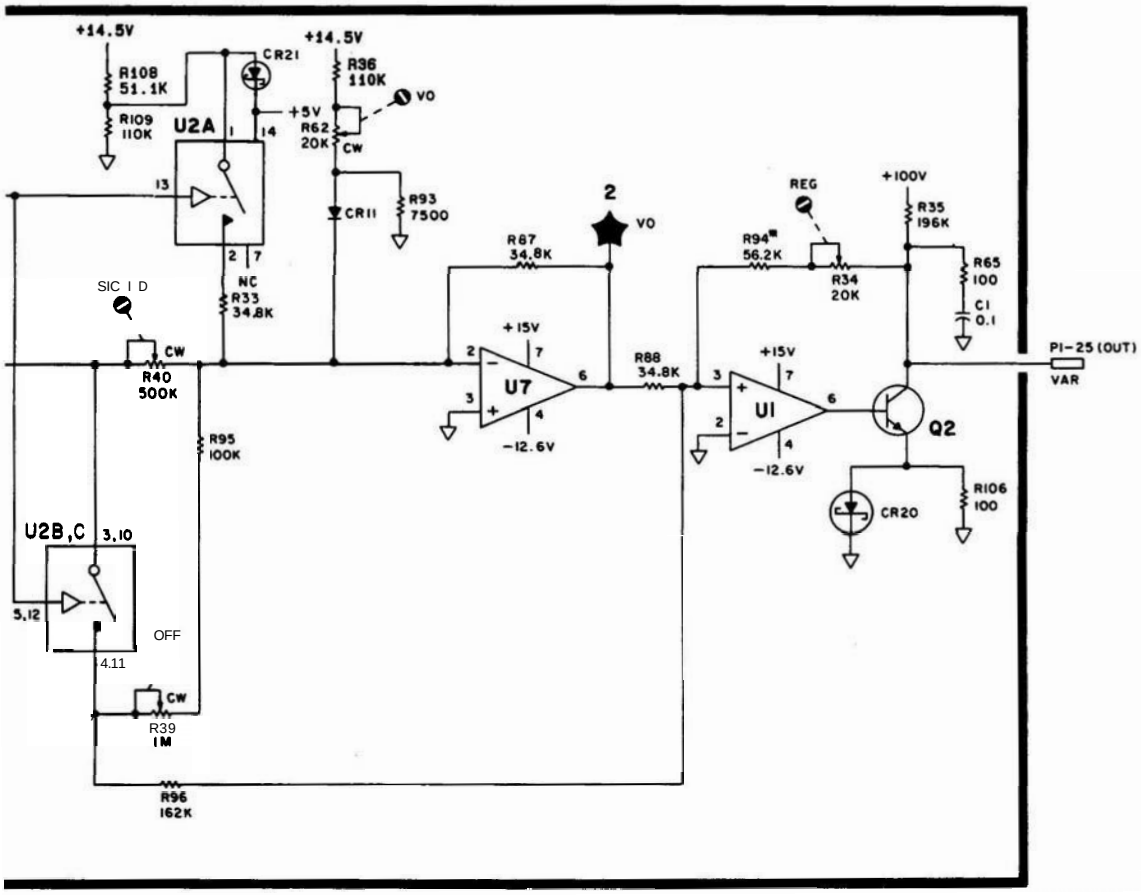

P/O FIGURE 8-33. MARKER ASSEMBLY A8, SCHEMATIC DIAGRAM (2 OF 2) (SERIAL PREFIX 2309A)

Pages 8-97 through **8-115/8-116: SWEEP GENERATOR/BANDWIDTH CONTROL ASSEMBLY** A9

Table **8-6.** Sweep **Generator/Bandwidth** Control Assembly **A9,** Replaceable Parts

2236A & Below	Change **A9** to HP Part Number **08559-60074,** Check Digit **0.** Change **A9C24** to HP Part Number 0160-2055, Check Digit 9, CAPACITOR-FXD **.01UF +80-20% 100VDC** CER. Change **A9C26** to HP Part Number 0160-0153, Check Digit 4, CAPACITOR-FXD **1000PF +-10% 200VDC POLYE.** Change **A9R70, A9R73,** and **A9R81** to HP Part Number **0698-7794,** Check Digit 2, RESISTOR **10K .25% .12W.** Change **A9R83** to HP Part Number **0698-8322,** Check Digit 4, RESISTOR 111 OHM **.25% .12W.** Change **A9R120*** to HP Part Number **0698-3153,** Check Digit 9, RESISTOR **3.83K** 1%**.12W.** Under Miscellaneous Parts, delete HP Part Number 1200-0173.
2203A & Below	Change **A9** to HP Part Number 08559-60071, Check Digit 7. Delete **A9CR29, A9Q56, A9R106, A9R123,** and **A9R124.** Change **A9Q29** to HP Part Number **1855-0062,** Check Digit 8, TRANSISTOR J-FET **N-CHAN D-MODE SI.** Change **A9R88** and **A9R89** to HP Part Number **0757-0465,** Check Digit 6, RESISTOR **100K** 1%**.125W** F **TC=0+-100.** Change **A9R95** to HP Part Number **0757-0470,** Check Digit 3, RESISTOR 162K 1%**.125W** F **TC=0+-100.** Change **A9R96** to HP Part Number **0757-0467,** Check Digit 8, RESISTOR 121K 1%**.125W** F **TC=0+-100.**
2107A01633 & Below	Replace Table 8-6 with new Table 8-6 (SERIAL PREFIX **2107A01633)** included in this Manual Backdating supplement.

Figure 8-39. Sweep **Generator/Bandwidth** Control **Assembly A9, Component** Locations

2203A & Below	Replace Figure 8-39 with new Figure 8-39 (SERIAL PREFIX **2203A)** included in this Manual Backdating supplement.
2107A01633 & Below	Replace Figure 8-39 with new Figure 8-39 (SERIAL PREFIX **2107A01633)** included in this Manual Backdating supplement.

Figure 8-40. Sweep **Generator/Bandwidth** Control **Assembly A9,** Schematic Diagram **(1** of **2)**

2236A & Below	Change A9 to HP Part Number **08559-60074.**
2203A & Below	Change **A9** to HP Part Number 08559-60071. In function block **(O),** change R88 and R89 to **100K.** Replace function blocks **(L), (M),** and **(N)** with P/O Figure **8-** 40 **(2** of **2)** (SERIAL PREFIX **2203A)** included in this Manual Backdating supplement.
2107A01633 & Below	Replace Figure 8-40 **(1** of **2)** with new Figure 8-40 **(1** of **2)** (SERIAL PREFIX **2107A01633)** included in this Manual Backdating supplement. In function block **(F),** add a numeral 1 next to the ground symbol at the collector of **Q5.**

Figure 8-40. Sweep Generator/Bandwidth Control Assembly A9, Schematic Diagram (2 of 2)

2236A & Below	Change A9 to HP Part Number 08559-60074. Change the following in function block (A): C26 to .001UF. R120* to 3830. Change the following in function block (O): R83 to 111. Add a "1" next to the ground symbol at the source of Q23, 425, Q29, and at the emitter of 448.
2203A & Below	Change A9 to HP Part Number 08559-60071. In function block (C), delete R106. In function block (D), change R95 to 162K and R96 to 121K.
2107A01633 & Below	Replace Figure 8-40 (2 of 2) with new Figure 8-40 (2 of 2) (SERIAL PREFIX 2107A01633) included in this Manual Backdating supplement.

TABLE 86. SWEEP GENERATOR/BANDWIDTH CONTROL ASSEMBLY A9, REPLACEABLE PARTS (1 OF 4) (SERIAL PREFIX 2107A01633)

Reference Designation	HP Part Number	C D	Qty	Description	Mfr Code	Mfr Part Number
A9	08559-60023	9	1	WEEP GENERATOR/BANDWIDTH CONTROL	28480	08559-60023
A9C1	0180-0197	8	5	CAPACITOR-FXD 2.2UF+-10% 20VDC TA	56289	150D225X9020A2
A9C2	0160-3456	6	3	CAPACITOR-FXD 1000PF +-10% 1KVDC CER	28480	0160-3456
A9C3	0160-3402	2	1	CAPACITOR-FXD 1UF +-5% 50VDC MET-POLYC	20480	0160-3402
A9C4	0160-3009	5	1	CAPACITOR-FXD 982PF +-1% 100VDC MICA	28480	0160-3009
A9C5	0180-0197	8		CAPACITOR-FXD 2.2UF+-10% 20VDC TA	56289	150D225X9020A2
A9C6	0160-3094	8	2	CAPACITOR-FXD .1UF +-10% 100VDC CER	28480	0160-3094
A9C7	0160-3456	6		CAPACITOR-FXD 1000PF +-10% 1KVDC CER	28480	0160-3456
A9C8	0160-3466	8	2	CAPACITOR-FXD 100PF +-10% 1KVDC CER	28480	0160-3466
A9C9	0160-2257	3	1	CAPACITOR-FXD 10PF +-5% 500VDC CER 0+-60	28480	0160-2257
A9C10	0160-2150	5	1	CAPACITOR-FXD 33PF +-5% 300VDC MICA	28480	0160-2150
A9C11	0180-0197	8		CAPACITOR-FXD 2.2UF+-10% 20VDC TA	56289	150D225X9020A2
A9C12	0140-0192	9	1	CAPACITOR-FXD 68PF +-5% 300VDC MICA	72136	DM15E680J0300WV1CR
A9C13	0180-0197	8		CAPACITOR-FXD 2.2UF+-10% 20VDC TA	56289	150D225X9020A2
A9C14	0160-4297	5	2	CAPACITOR-FXD .022UF +80-20% 100VDC CER	56289	C023F101H223ZS22-CDH
A9C15	0160-3456	6		CAPACITOR-FXD 1000PF +-10% 1KVDC CFR	28480	0160-3456
A9C16	0160-3094	8		CAPACITOR-FXD .1UF +-10% 100VDC CER	28480	0160-3094
A9C17	0160-3466	8		CAPACITOR-FXD 100PF +-10% 1KVDC CER	28480	0160-3466
A9C18	0160-4297	5		CAPACITOR-FXD .022UF +80-20% 100VDC CER	56289	C023F101H223ZS22-CDH
A9C19	0180-2205	3	1	CAPACITOR-FXD .33UF+-10% 35VDC TA	56289	150D334X9035A2
A9C20	0180-1743	2	1	CAPACITOR-FXD .1UF+-10% 35VDC TA	56289	150D104X9035A2
A9C21	0160-0163	6	1	CAPACITOR-FXD .033UF +-10% ZOOVDC POLYE	28480	0160-0163
A9C22	0160-2055	9	1	CAPACITOR-FXD .01UF +80-20% 1ODVDC CER	28480	0160-2055
A9C23	0160-0155	6	1	CAPACITOR-FXD 3300PF +-10% 200VDC POLYE	28480	0160-0155
A9C24	0160-0153	4	1	CAPACITOR-FXD 1000PF +-10% 200VDC POLYE	28480	0160-0153
A9C25	0160-0134	1	1	CAPACITOR-FXD 220PF +-5% 300VDC MICA	28480	0160-0134
A9C26	0180-0197	8		CAPACITOR-FXD 2.2UF+-10% 20VDC TA	56289	150D225X9020A2
A9C27	0170-0066	9	1	CAPACITOR-FXD .027UF +-10% 200VDC POLYE	28480	0170-0066
A9CR1	1901-0050	3	23	DIODE-SWITCHING 80V 200MA 2NS DO-35	28480	1901-0050
A9CR2	1901-0050	3		DIODE-SWITCHING 80V 200MA 2NS DO-35	28400	1901-0050
A9CR3	1901-0050	3		DIODE-SUITCHING 80V 200MA 2NS DO-35	28480	1901-0050
A9CR4	1901-0050	3		DIODE-SUITCHING 80V 200MA 2NS DO-35	28480	1901-0050
A9CR5	1901-0376	6	1	DIODE-GEN PRP 3SV 50MA DO-35	28480	1901-0376
A9CR6	1901-0050	3		DIODE-SUITCHING 80V 200MA 2NS DO-35	28480	1901-0050
A9CR7	1901-0050	3		DIODE-GUITCHING 80V 200MA 2NS DO-35	28480	1901-0050
A9CR8	1901-0050	3		DIODE-SWITCHING 80V 200MA 2NS DO-35	28480	1901-0050
A9CR9	1901-0050	3		DIODE-SWITCHING 80V 200MA 2NS DO-35	28480	1901-0050
A9CR10	1901-0050	3		DIODE-SWITCHING 80V 200MA 2NS DO-35	28480	1901-0050
A9CR11	1901-0050	3		DIODE-SUITCHING 80V 200MA 2NS DO-35	28480	1901-0050
A9CR12	1901-0050	3		DIODE-SUITCHING 80V 200MA 2NS DO-35	28480	1901-0050
A9CR13	1901-0050	3		DIODE-DUITCHING 80V 200MA 2NS DO-35	28480	1901-0050
A9CR14	1901-0050	3		DIODE-SWITCHING 80V 200MA 2NS DO-35	28480	1901-0050
A9CR15	1901-0050	3		DIODE-SUITCHING 83V 200MA 2NS DO-35	28480	1901-0050
A9CR16	1901-0050	3		DIODE-SUITCHING 80V 200MA 2NS DO-35	28480	1901-0050
A9CR17	1901-0050	3		DIODE-WITCHING 80V 200MA 2NS DO-35	28480	1901-0050
A9CR18	1901-0050	3		DIODE-SUITCHING 80V 200MA 2NS DO-35	28480	1901-0050
A9CR19	1901-0050	3		DIODE-SWITCHING 80V 200MA CNS DO-35	28480	1901-0050
A9CR20	1901-0050	3		DIODE-SUITCHING 80V 200MA 2N0 DO-35	28480	1901-0050
A9CR21	1901-0050	3		DIODE-SWITCHING 80V 200MA 2N3 DO-35	28480	1901-0050
A9CR22	1901-0050	3		DIODE-BYITCHING 80V 200MA 2NS DO-35	28480	1901-0050
A9CR23	1901-0050	3		DIODE-SWITCHING 80V 200MA 2NS DO-35	28480	1901-0050
A9CR24	1901-0050	3		DIODE-SUITCHING 80V 200MA 2NS DO-35	28480	1901-0050
A9CR25	1901-0539	3	1	DIODE-SM SIG SCHOTTKY	28480	1901-0539
A9MP1	7100-0699	4	1	OSCILLATOR SHIELD	28480	7100-0699
	1205-0202	1	1	THERMAL LINK DUAL TO-18-CS	28480	1205-0202
A9MP2	0403-0826	6	1	PLUG-HOLE BDR-HD FOR .187-D-HOLE NYL	02768	207-128241-03-0101
A9Q1	1854-0071	7	16	TRANSISTOR NPN SI PD=300MW FT=200MHZ	28480	1854-0071
A9Q2	1855-0082	2	7	TRANSISTOR J-FET P-CHAN D-MODE 81	28480	1855-0082
A9Q3	1855-0082	2		TRANSISTOR J-FET P-CHAN D-MOM SI	28480	1855-0082
A9Q4	1853-0007	7	2	TRANSISTOR PNP 213251 SI TO-18 PD=360MW	04713	2N3251
A9Q5	1853-0020	4	4	TRANSISTOR PNP SI PD=300MW FT=150MHZ	28480	1853-0020
A9Q6	1854-0071	7		TRANSISTOR NPN SI PD=300MW FT=200MHZ	28480	1854-0071
A9Q7	1853-0007	7		TRANSISTOR P W 2N3251 SI TO-18 PD=360MW	04713	2N3251
A9Q8	1854-0071	7		TRANSISTOR NPN SI PD=300MW FT=200MHZ	28480	1854-0071
A9Q9	1854-0071	7		TRANSISTOR NPN SI PD=300MW FT=200MHZ	28480	1054-0071
A9Q10	1854-0404	0	14	TRANSISTOR NPN SI TO-18 PD=360MW	28480	1854-0404
A9Q11	1855-0417	7	2	TRANSISTOR J-FET N-CHAN D-HODE TO-18 SI	28480	1855-0417
A9Q12	1853-0020	4		TRANSISTOR PNP SI PD=300MW FT=150MHZ	28480	1853-0020
A9Q13	1854-0404	0		TRANSISTOR NPN 31 TO-18 PD=360MW	28480	1854-0404
A9Q14	1854-0404	0		TRANSISTOR NPN SI TO-18 PD=360MW	28480	1854-0404
A9Q15	1854-0404	0		TRANSISTOR NPN SI TO-18 PD=360MW	28480	1854-0404

See introduction to this section for ordering information
*Indicates factory selected value

TABLE 8-6. SWEEP GENERATOR/BANDWIDTH CONTROL ASSEMBLY A9, REPLACEABLE PARTS (2 OF 4) (SERIAL PREFIX 2107A01633)

Reference Designation	HP Part Number	C D	Qty	Description	Mfr Code	Mfr Part Number
A9Q16	1854-0019	3	8	TRANSISTOR NPN SI TO-18 PD=360MW	28480	1854-0019
A9Q17	1854-0404	0		TRANSISTOR NPN SI TO-18 PD=360MW	28480	1854-0404
A9Q18	1854-0019	3		TRANSISTOR NPN SI TO-18 PD=360MW	28480	1854-0019
A9Q19	1854-0404	0		TRANSISTOR NPN SI TO-18 PD=360MW	28480	1854-0404
A9Q20	1854-0404	0		TRANSISTOR NPN SI TO-18 PD=360MW	28480	1854-0404
A9Q21	1854-0404	0		TRANSISTOR NPN SI TO-18 PD=360MW	28480	1854-0404
A9Q22	1854-0404	0		TRANSISTOR NPN SI TO-18 PD=360MW	28480	1854-0404
A9Q23	1854-0404	0		TRANSISTOR NPN SI TO-18 PD=360MW	28480	1854-0404
A9Q24	1854-0019	3		TRANSISTOR NPN SI TO-18 PD=360MW	28480	1854-0019
A9Q25	1855-0082	2		TRANSISTOR J-FET P-CHAN D-MODE SI	28480	1855-0082
A9Q26	1855-0082	2		TRANSISTOR J-FET P-CHAN D-MODE SI	28480	1855-0082
A9Q27	1855-0082	2		TRANSISTOR J-FET P-CHAN D-MODE SI	28480	1855-0082
A9Q28	1855-0082	2		TRANSISTOR J-FET P-CHAN D-MODE SI	28480	1855-0082
A9Q29	1855-0062	8	1	TRANSISTOR J-FET N-CHAN D-MODE SI	28480	1855-0062
A9Q30	1855-0082	2		TRANSISTOR J-FET P-CHAN D-MODE SI	28480	1855-0082
A9Q31	1854-0071	7		TRANSISTOR NPN SI PD=300MW FT=200MHZ	28480	1854-0071
A9Q32	1854-0071	7		TRANSISTOR NPN SI PD=300MW FT=200MHZ	28480	1854-0071
A9Q33	1854-0071	7		TRANSISTOR NPN SI PD=300MW FT=200MHZ	28480	1854-0071
A9Q34	1854-0071	7		TRANSISTOR NPN SI PD=300MW FT=200MHZ	28480	1854-0071
A9Q35	1854-0071	7		TRANSISTOR NPN SI PD=300MW FT=200MHZ	28480	1854-0071
A9Q36	1854-0071	7		TRANSISTOR NPN SI PD=300MW FT=200MHZ	28480	1854-0071
A9Q37	1853-0020	4		TRANSISTOR PNP SI PD=300MW FT=150MHZ	28480	1853-0020
A9Q38	1854-0071	7		TRANSISTOR NPN SI PD=300MW FT=200MHZ	28480	1854-0071
A9Q39	1854-0071	7		TRANSISTOR NPN SI PD=300MW FT=200MHZ	28480	1854-0071
A9Q40	1854-0071	7		TRANSISTOR NPN SI PD=300MW FT=200MHZ	28480	1854-0071
A9Q41	1854-0019	3		TRANSISTOR NPN SI TO-18 PD=360MW	28480	1854-0019
A9Q42	1854-0404	0		TRANSISTOR NPN SI TO-18 PD=360MW	28480	1854-0404
A9Q43	1854-0019	3		TRANSISTOR NPN SI TO-18 PD=360MW	28480	1854-0019
A9Q44	1854-0404	0		TRANSISTOR NPN SI TO-18 PD=360MW	28480	1854-0404
A9Q45	1854-0019	3		TRANSISTOR NPN SI TO-18 PD=360MW	28480	1854-0019
A9Q46	1854-0019	3		TRANSISTOR NPN SI TO-18 PD=360MW	28480	1854-0019
A9Q47	1854-0019	3		TRANSISTOR NPN SI TO-18 PD=360MW	28480	1854-0019
A9Q48	1854-0404	0		TRANSISTOR NPN SI TO-18 PD=360MW	28480	1854-0404
A9Q49	1854-0404	0		TRANSISTOR NPN SI TO-18 PD=360MW	28480	1854-0404
A9Q50	1853-0020	4		TRANSISTOR PNP SI PD=300MW FT=150MHZ	28480	1853-0020
A9Q51	1854-0071	7		TRANSISTOR NPN SI PD=300MW FT=200MHZ	28480	1854-0071
A9Q52	1855-0417	7		TRANSISTOR J-FET N-CHAN D-MODE TO-18 SI	28480	1855-0417
A9Q53	1854-0071	7		TRANSISTOR NPN SI PD=300MW FT=200MHZ	28480	1854-0071
A9Q54	1854-0071	7		TRANSISTOR NPN SI PD=300MW FT=200MHZ	28480	1854-0071
A9R1	0698-3458	9	1	RESISTOR 42.2K 1% .125W F TC=0+-100	24546	C4-1/8-T0-4222-F
A9R2	2100-3154	7	1	RESISTOR-TRMR 1K 10% C SIDE-ADJ 17-TRN	02111	43P102
A9R3	0757-0279	0	4	RESISTOR 3.16K 1% .125W F TC=0+-100	24546	C4-1/8-T0-3161-F
A9R4	0757-0419	0	1	RESISTOR 681 1% .125W F TC=0+-100	24546	C4-1/8-T0-681R-F
A9R5	0757-0459	8	3	RESISTOR 56.2K 1% .125W F TC=0+-100	24546	C4-1/8-T0-5622-F
A9R6	0698-3152	8	1	RESISTOR 3.48K 1% .125W F TC=0+-100	24546	C4-1/8-T0-3481-F
A9R7	0757-0442	9	19	RESISTOR 10K 1% .125W F TC=0+-100	24546	C4-1/8-T0-1002-F
A9R8	0757-0442	9		RESISTOR 10K 1% .125W F TC=0+-100	24546	C4-1/8-T0-1002-F
A9R9	0757-0444	1	2	RESISTOR 12.1K 1% .125W F TC=0+-100	24546	C4-1/8-T0-1212-F
A9R10	2100-3109	2	1	RESISTOR-TRMR 2K 10% C SIDE-ADJ 17-TRN	02111	43P202
A9R11	0698-3457	6	2	RESISTOR 316K 1% .125W F TC=0+-100	28480	0698-3457
A9R12	0698-3442	9	1	RESISTOR 237 1% .125W F TC=0+-100	24546	C4-1/8-T0-237R-F
A9R13	2100-3052	4	1	RESISTOR-TRMR 50 10% C SIDE-ADJ 17-TRN	02111	43P500
A9R14	0698-3446	3	1	RESISTOR 383 1% .125W F TC=0+-100	24546	C4-1/8-T0-383R-F
A9R15	0757-0424	7	1	RESISTOR 1.1K 1% .125W F TC=0+-100	24546	C4-1/8-T0-1101-F
A9R16	0698-7412	1	3	RESISTOR 13.3K .25% .125W F TC=0+-100	19701	MF4C1/8-T0-1332-C
A9R17	0757-0442	9		RESISTOR 10K 1% .125W F TC=0+-100	24546	C4-1/8-T0-1002-F
A9R18	0757-0458	7	2	RESISTOR 51.1K 1% .125W F TC=0+-100	24546	C4-1/8-T0-5112-F
A9R19	0757-0465	6	9	RESISTOR 100K 1% .125W F TC=0+-100	24546	C4-1/8-T0-1003-F
A9R20	0757-0465	6		RESISTOR 100K 1% .125W F TC=0+-100	24546	C4-1/8-T0-1003-F
A9R21	0757-0279	0		RESISTOR 3.16K 1% .125W F TC=0+-100	24546	C4-1/8-T0-3161-F
A9R22	0757-0280	3	1	RESISTOR 1K 1% .125W F TC=0+-100	24546	C4-1/8-T0-1001-F
A9R23	0698-3444	1	1	RESISTOR 316 1% .125W F TC=0+-100	24546	C4-1/8-T0-316R-F
A9R24	0698-6360	6	2	RESISTOR 10K .1% .125W F TC=0+-25	28480	0698-6360
A9R25	0698-3934	4	1	RESISTOR 42.18K .1% .125W F TC=0+-25	28480	0698-3934
A9R26	0698-7794	2	6	RESISTOR 10K .25% .125W F TC=0+-100	19701	MF4C1/8-T0-1002-C
A9R27	0683-3355	2	3	RESISTOR 3.3M 5% .25W FC TC=-900/+1100	01121	CB3355
A9R28	0683-3355	2		RESISTOR 3.3M 5% .25W FC TC=-900/+1100	01121	CB3355
A9R29	0698-6360	6		RESISTOR 10K .1% .125W F TC=0+-25	28480	0698-6360
A9R30	0698-3935	5	1	RESISTOR 4.946K .1% .125W F TC=0+-25	28480	0698-3935
A9R31	0757-0442	9		RESISTOR 10K 1% .125W F TC=0+-100	24546	C4-1/8-T0-1002-F
A9R32	0698-3160	8	3	RESISTOR 31.6K 1% .125W F TC=0+-100	24546	C4-1/8-T0-3162-F
A9R33	0698-3260	9	2	RESISTOR 464K 1% .125W F TC=0+-100	28480	0698-3260
A9R34	0698-3160	8		RESISTOR 31.6K 1% .125W F TC=0+-100	24546	C4-1/8-T0-3162-F
A9R35	0698-4037	0	2	RESISTOR 46.4 1% .125W F TC=0+-100	24546	C4-1/8-T0-46R4-F

See introduction to this section for ordering information
*Indicates factory selected value

TABLE 8-6. SWEEP GENERATOR/BANDWIDTH CONTROL ASSEMBLY A9, REPLACEABLE PARTS (3 OF 4) (SERIAL PREFIX 2107A01633)

Reference Designation	HP Part Number	C D	Qty	Description	Mfr Code	Mfr Part Number
A9R36	0698-4037	0		RESISTOR 46.4 1% .125W F TC=0+-100	24546	C4-1/8-T0-46R4-F
A9R37	0683-6845	1	1	RESISTOR 680K 5% .25W FC TC=-800/+900	01121	CB6845
A9R38	0698-3457	6		RESISTOR 316K 1% .125W F TC=0+-100	28480	0698-3457
A9R39	0757-0439	4	3	RESISTOR 6.81K 1% .125W F TC=0+-100	24546	C4-1/8-T0-6811-F
A9R40	0698-3451	0	2	RESISTOR 133K 1% .125W F TC=0+-100	24546	C4-1/8-T0-1333-F
A9R41	0757-0459	8		RESISTOR 56.2K 1% .125W F TC=0+-100	24546	C4-1/8-T0-5622-F
A9R42	0698-7421	2	3	RESISTOR 40K .25% .125W F TC=0+-100	19701	MF4C1/8-T0-4002-C
A9R43	0698-3194	8	3	RESISTOR 20K .25% .125W F TC=0+-50	03888	PME55-1/8-T2-2002-C
A9R44	0698-7794	2		RESISTOR 10K .25% .125W F TC=0+-100	19701	MF4C1/8-T0-1002-C
A9R45	0757-0289	2	2	RESISTOR 13.3K 1% .125W F TC=0+-100	19701	MF4C1/8-T0-1332-F
A9R46	0757-0199	3	19	RESISTOR 21.5K 1% .125W F TC=0+-100	24546	C4-1/8-T0-2152-F
A9R47	0757-0346	2	2	RESISTOR 10 1% .125W F TC=0+-100	24546	C4-1/8-T0-10R0-F
A9R48	0757-0465	6		RESISTOR 100K 1% .125W F TC=0+-100	24546	C4-1/8-T0-1003-F
A9R49	0757-0464	5	1	RESISTOR 90.9K 1% .125W F TC=0+-100	24546	C4-1/8-T0-9092-F
A9R50	0757-0442	9		RESISTOR 10K 1% .125W F TC=0+-100	24546	C4-1/8-T0-1002-F
A9R51	0757-0279	0		RESISTOR 3.16K 1% .125W F TC=0+-100	24546	C4-1/8-T0-3161-F
A9R52	0757-0439	4		RESISTOR 6.81K 1% .125W F TC=0+-100	24546	C4-1/8-T0-6811-F
A9R53	0757-0460	1	2	RESISTOR 61.9K 1% .125W F TC=0+-100	24546	C4-1/8-T0-6192-F
A9R54	0757-0442	9		RESISTOR 10K 1% .125W F TC=0+-100	24546	C4-1/8-T0-1002-F
A9R55	0757-0442	9		RESISTOR 10K 1% .125W F TC=0+-100	24546	C4-1/8-T0-1002-F
A9R56	0757-0465	6		RESISTOR 100K 1% .125W F TC=0+-100	24546	C4-1/8-T0-1003-F
A9R57	0757-0439	4		RESISTOR 6.81K 1% .125W F TC=0+-100	24546	C4-1/8-T0-6811-F
A9R58	0757-0465	6		RESISTOR 100K 1% .125W F TC=0+-100	24546	C4-1/8-T0-1003-F
A9R59	0757-0279	0		RESISTOR 3.16K 1% .125W F TC=0+-100	24546	C4-1/8-T0-3161-F
A9R60	0698-3160	8		RESISTOR 31.6K 1% .125W F TC=0+-100	24546	C4-1/8-T0-3162-F
A9R61	0757-0465	6		RESISTOR 100K 1% .125W F TC=0+-100	24546	C4-1/8-T0-1003-F
A9R62	0757-0465	6		RESISTOR 100K 1% .125W F TC=0+-100	24546	C4-1/8-T0-1003-F
A9R63	0757-0346	2		RESISTOR 10 1% .125W F TC=0+-100	24546	C4-1/8-T0-10R0-F
A9R64	0757-0199	3		RESISTOR 21.5K 1% .125W F TC=0+-100	24546	C4-1/8-T0-2152-F
A9R65	0757-0199	3		RESISTOR 21.5K 1% .125W F TC=0+-100	24546	C4-1/8-T0-2152-F
A9R66	0757-0199	3		RESISTOR 21.5K 1% .125W F TC=0+-100	24546	C4-1/8-T0-2152-F
A9R67	0757-0199	3		RESISTOR 21.5K 1% .125W F TC=0+-100	24546	C4-1/8-T0-2152-F
A9R68	0698-7412	1		RESISTOR 13.3K .25% .125W F TC=0+-100	19701	MF4C1/8-T0-1332-C
A9R69	0757-1094	9	1	RESISTOR 1.47K 1% .125W F TC=0+-100	24546	C4-1/8-T0-1471-F
A9R70	0757-0199	3		RESISTOR 21.5K 1% .125W F TC=0+-100	24546	C4-1/8-T0-2152-F
A9R71	0757-0199	3		RESISTOR 21.5K 1% .125W F TC=0+-100	24546	C4-1/8-T0-2152-F
A9R72	2100-2858	8	2	RESISTOR-TRMR 10K 10% WW SIDE-ADJ 20-TRN	02660	3810P-103
A9R73	0757-0199	3		RESISTOR 21.5K 1% .125W F TC=0+-100	24546	C4-1/8-T0-2152-F
A9R74	0698-3151	7	1	RESISTOR 2.87K 1% .125W F TC=0+-100	24546	C4-1/8-T0-2871-F
A9R75	0757-0199	3		RESISTOR 21.5K 1% .125W F TC=0+-100	24546	C4-1/8-T0-2152-F
A9R76	0757-0442	9		RESISTOR 10K 1% .125W F TC=0+-100	24546	C4-1/8-T0-1002-F
A9R77	0757-0199	3		RESISTOR 21.5K 1% .125W F TC=0+-100	24546	C4-1/8-T0-2152-F
A9R78	0757-0458	7		RESISTOR 51.1K 1% .125W F TC=0+-100	24546	C4-1/8-T0-5112-F
A9R79	0757-0199	3		RESISTOR 21.5K 1% .125W F TC=0+-100	24546	C4-1/8-T0-2152-F
A9R80	0757-0199	3		RESISTOR 21.5K 1% .125W F TC=0+-100	24546	C4-1/8-T0-2152-F
A9R81	0757-0199	3		RESISTOR 21.5K 1% .125W F TC=0+-100	24546	C4-1/8-T0-2152-F
A9R82	0698-0085	0	1	RESISTOR 2.61K 1% .125W F TC=0+-100	24546	C4-1/8-T0-2611-F
A9R83	0698-3260	9		RESISTOR 464K 1% .125W F TC=0+-100	28480	0698-3260
A9R84	0757-0444	1		RESISTOR 12.1K 1% .125W F TC=0+-100	24546	C4-1/8-T0-1212-F
A9R85	2100-2858	8		RESISTOR-TRMR 10K 10% WW SIDE-ADJ 20-TRN	02660	3810P-103
A9R86	0698-7794	2		RESISTOR 10K .25% .125W F TC=0+-100	19701	MF4C1/8-T0-1002-C
A9R87	0757-0199	3		RESISTOR 21.5K 1% .125W F TC=0+-100	24546	C4-1/8-T0-2152-F
A9R88	0757-0199	3		RESISTOR 21.5K 1% .125W F TC=0+-100	24546	C4-1/8-T0-2152-F
A9R89	0757-0460	1		RESISTOR 61.9K 1% .125W F TC=0+-100	24546	C4-1/8-T0-6192-F
A9R90	0698-7421	2		RESISTOR 40K .25% .125W F TC=0+-100	19701	MF4C1/8-T0-4002-C
A9R91	0757-0199	3		RESISTOR 21.5K 1% .125W F TC=0+-100	24546	C4-1/8-T0-2152-F
A9R92	0757-0289	2		RESISTOR 13.3K 1% .125W F TC=0+-100	19701	MF4C1/8-T0-1332-F
A9R93	0698-3194	8		RESISTOR 20K .25% .125W F TC=0+-50	03888	PME55-1/8-T2-2002-C
A9R94	0757-0199	3		RESISTOR 21.5K 1% .125W F TC=0+-100	24546	C4-1/8-T0-2152-F
A9R95	0698-3153	9	1	RESISTOR 3.83K 1% .125W F TC=0+-100	24546	C4-1/8-T0-3831-F
A9R96	0698-7412	1		RESISTOR 13.3K .25% .125W F TC=0+-100	19701	MF4C1/8-T0-1332-C
A9R97	0757-0199	3		RESISTOR 21.5K 1% .125W F TC=0+-100	24546	C4-1/8-T0-2152-F
A9R98	0757-0442	9		RESISTOR 10K 1% .125W F TC=0+-100	24546	C4-1/8-T0-1002-F
A9R99	0757-0199	3		RESISTOR 21.5K 1% .125W F TC=0+-100	24546	C4-1/8-T0-2152-F
A9R100				NOT ASSIGNED		
A9R101	0698-7794	2		RESISTOR 10K .25% .125W F TC=0+-100	19701	MF4C1/8-T0-1002-C
A9R102				NOT ASSIGNED		
A9R103				NOT ASSIGNED		
A9R104				NOT ASSIGNED		
A9R105				NOT ASSIGNED		
A9R106				NOT ASSIGNED		
A9R107	0757-0442	9		RESISTOR 10K 1% .125W F TC=0+-100	24546	C4-1/8-T0-1002-F
A9R108	0757-0442	9		RESISTOR 10K 1% .125W F TC=0+-100	24546	C4-1/8-T0-1002-F
A9R109	0757-0442	9		RESISTOR 10K 1% .125W F TC=0+-100	24546	C4-1/8-T0-1002-F
A9R110	0698-3451	0		RESISTOR 133K 1% .125W F TC=0+-100	24546	C4-1/8-T0-1333-F

See introduction to this section for ordering information
*Indicates factory selected value

TABLE 8-6. **SWEEP GENERATOR/BANDWIDTH** CONTROL ASSEMBLY **A9,** REPLACEABLE PARTS (4 OF 4) (SERIAL PREFIX **2107A01633**)

Reference Designation	HP Part Number	C D	Qty	Description	Mfr Code	Mfr Part Number
A9R111	0757-0442	9		RESISTOR 10K 1% .125W F TC=0+-100	24546	C4-1/8-T0-1002-F
A9R112	0757-0442	9		RESISTOR 10K 1% .125W F TC=0+-100	24546	C4 1/8-T0-1002-F
A9R113	0698-7794	2		RESISTOR 10k .25% .125W F TC=0+-100	10701	MF4C1/8-T0 1002-C
A9R114	0757-0459	8		RESISTOR 56.2K 1% .125W F TC=0+ 100	24546	C4 1/8-T0-5622-F
A9R115	0757-0442	9		RESISTOR 10K 1% .125W F TC=0+-100	24546	C4-1/8-T0-1002-F
A9R116	0757-0442	9		RESISTOR 10K 1% .125W F TC=0+-100	24546	C4 1/8-T0-1002-F
A9R117	0698-3238	1	1	RESISTOR 2.5K .25% .125W F TC=0+-50	28480	0698-3238
A9R118	0757-0465	6		RESISTOR 100K 1% .125W F TC=0+-100	24546	C4 1/8-T0-1003-F
A9R119	0698-7794	2		RESISTOR 10K .25% .125W F TC=0+-100	19701	MF4C1/8-T0-1002-C
A9R120	0698-6362	8	1	RESISTOR 1K .1% .125W F TC=0+-25	28480	0698-6362
A9R121	0698-8322	4	1	RESISTOR 111 .25% .125W F TC=0+-100	19701	MF4C1/8-T0-111R-C
A9R122	0683-1055	5	2	RESISTOR 1M 5% .25W FC TC=-800/+900	01121	CB1055
A9R123	0683-1055	5		RESISTOR 1M 5% .25W FC TC=-800/+900	01121	CB1055
A9R124	0757-0465	6		RESISTOR 100K 1% .125W F TC=0+-100	24546	C4 1/8-T0-1003-F
A9R125	0757-0461	2	1	RESISTOR 68.1K 1% .125W F TC=0+-100	74596	C4 1/8-T0-6812-F
A9R126	0757-0442	9		RESISTOR 10K 1% .125W F TC=0+-100	24546	C4 1/8-T0-1002-F
A9R127	0698-7421	2		RESISTOR 40K .25% .125W F TC=0+-100	19701	MF4C1/8-T0-4002-C
A9R128	0757-0442	9		RESISTOR 10K 1% .125W F TC=0+-100	74546	C4 1/8-T0-1002-F
A9R129	0698-3194	8		RESISTOR 20K .25% .125W F TC=0+-50	03888	PME55-1/8-T2-2002-C
A9R130	0683-3355	2		RESISTOR 3.3M 5% .25W FC TC=-900/+1100	01121	CB3355
A9R131	0757-0442	9		RESISTOR 10K 1% .125W F TC=0+-100	24546	C4-1/8-T0-1002-F
A9R132	0757-0447	4	1	RESISTOR 16.2K 1% .125W F TC=0+-100	24546	C4-1/8-T0-1622-F
A9TP9	1251-0600	0	9	CONNECTOR-SGL CONT PIN 1.14 MM-BSC-SZ SQ	28480	1251-0600
A9U1	1820-0223	0	1	IC UP AMP LP TO-99 PKG	31585	CA301AT
A9U2	1826-0092	3	1	IC OP AMP GP DUAL TO-99 PKG	28480	1826-0092
A9U3	1826-1058	3	1	IC OP AMP GP 0-TO 99 PKG	28480	1826-1058
A9VR1	1902-0025	4	1	DIODE ZNR 10V 5% DO-35 PD .4W TC=+.06%	28480	1902-0025
A9VR2	1902-3139	7	1	DIODE ZNR 8.25V 5% DO 35 PD= 4W	78480	1902-3139
A9VR3	1902-0049	2	1	DIODE-ZNR 6.19V 5% DO-35 PD-.4W	28480	1902-0049
				A9 MISCELLANEOUS PARTS		
	2200-0107	6	1	SCREW-MACH 4-40 .375-IN-LC PAN-HD-POZI	28480	2200-0107

See introduction to this section for ordering information
*Indicates factory selected value

A9
SWEEP **GENERATOR/BANDWIDTH** CONTROL

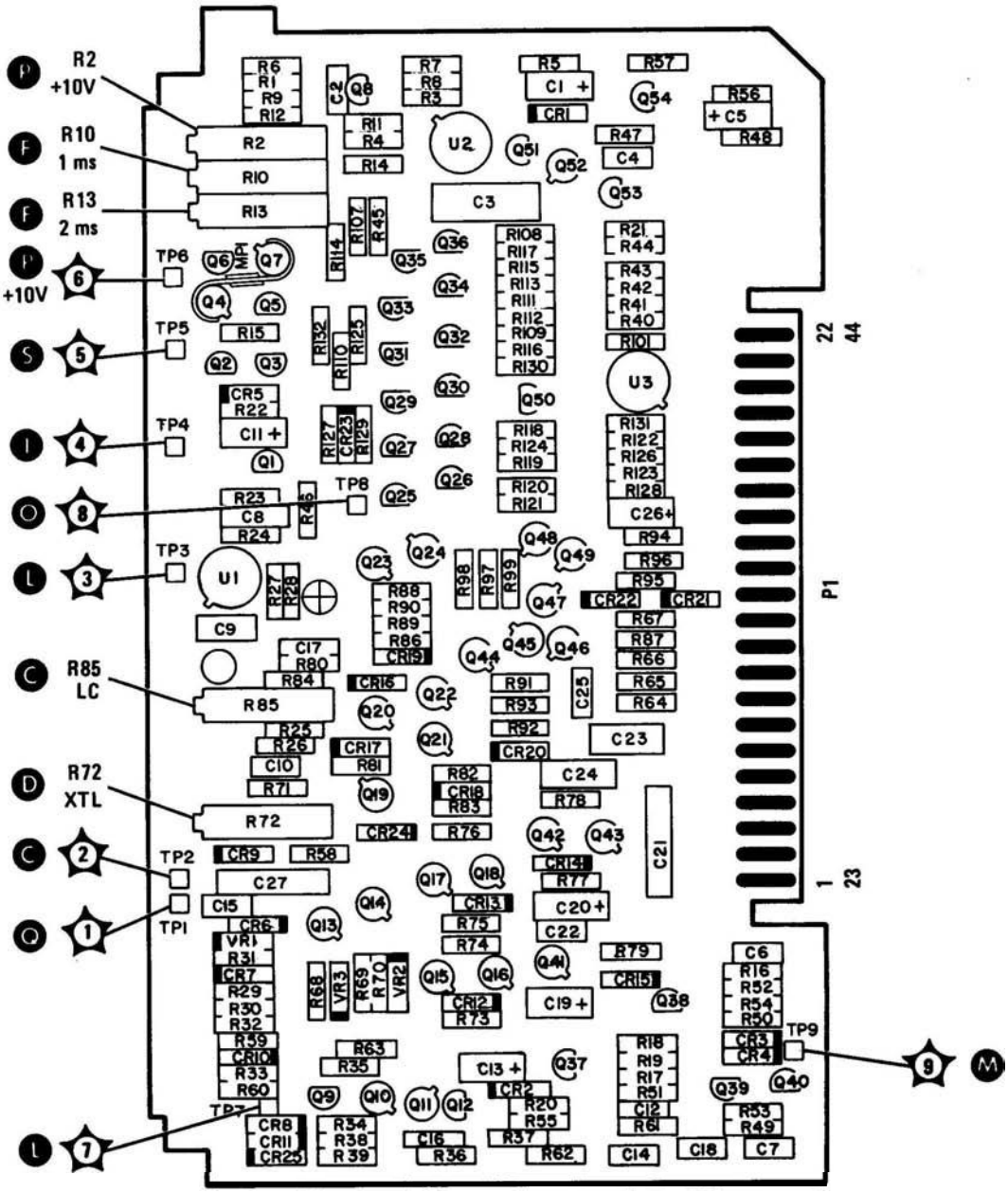

FIGURE 839. SWEEP **GENERATOR/BANDWIDTH** CONTROL ASSEMBLY **A9,** COMPONENT LOCATIONS (SERIAL PREFIX **2203A)**

A9
SWEEP **GENERATOR/BANDWIDTH** CONTROL

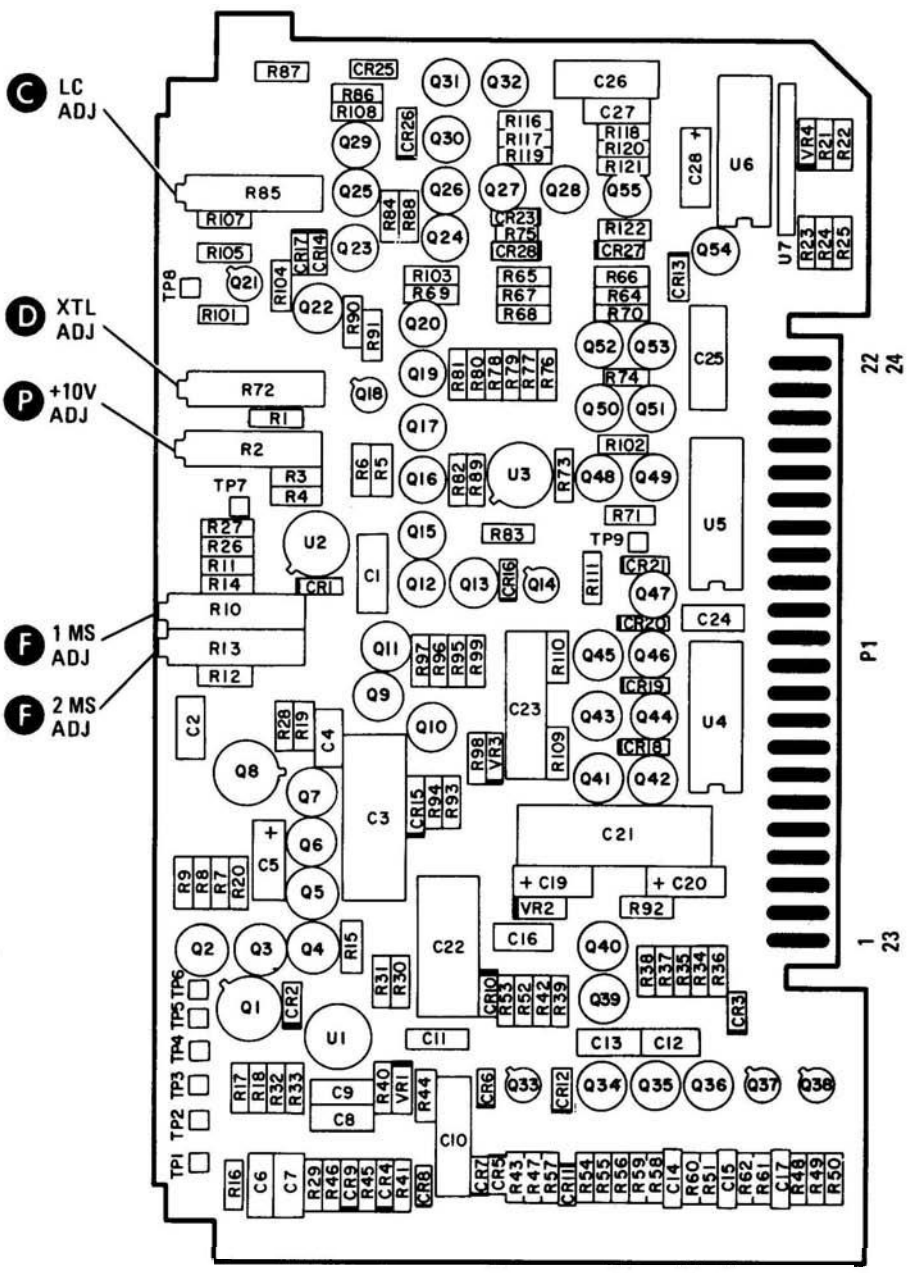

FIGURE 839. SWEEP **GENERATOR/BANDWIDTH** CONTROL ASSEMBLY **A9,** COMPONENT LOCATIONS (SERIAL PREFIX **2107A01633)**

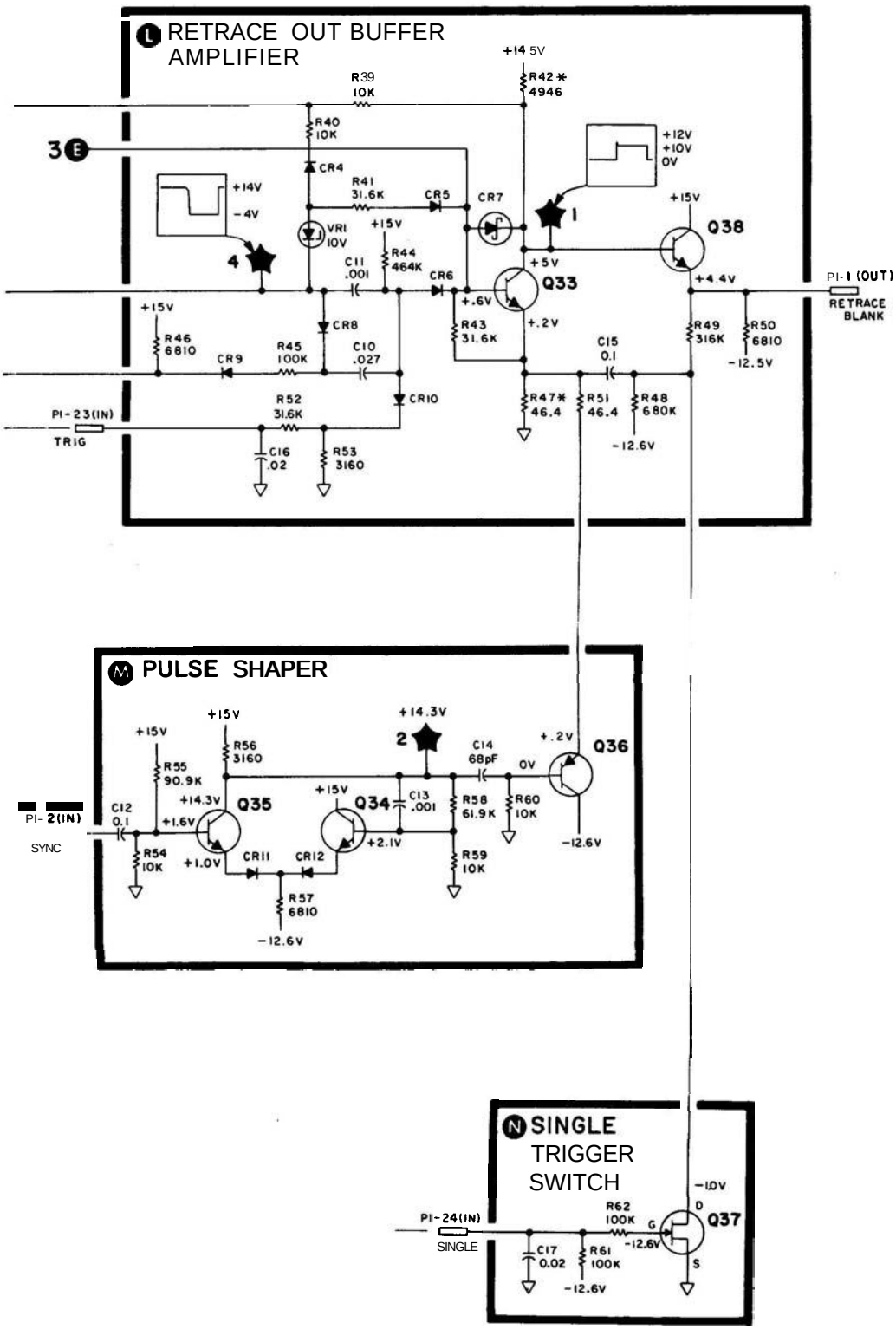

P/O FIGURE 8-40. A9 SWEEP GENERATOR/BANDWIDTH CONTROL, SCHEMATIC DIAGRAM (2 OF 2) (SERIAL PREFIX 2203A)

A9 SWEEP GENERATOR/BANDWIDTH CONTROL
08559-60023 (1 of 2)

P1

PIN	SIGNAL	TO/FROM	FUNCTION BLOCK
1 23	RETRACE TRIG	A6, A15 A2	A A
2 24	SYNC SINGLE	A2 A2	D D
3 25	ST7 MAN SCAN	A2 A2	B B
4 26	VERT -12.6V	A2 P1-28	B D
5 27	GND	A16	D
6 28	+15V	P1-29	D
7 29	+10V	A11, A12, A13	B
8 30	BW1 BW5	A2 A2	A A
9 31	BW2 BW6	A2 A11, A13	A D
10 32	BW3 BW7	A2 A11, A13	A C
11 33	BW4 NOISE MEASURE	A2 A2	A A
12 34	ATTEN SWP VIDEO FILTER	A8 A2	D A
13 35	A2T GND 1	A8 A7	A D
14 36	GND FS5	A16 A2	NC D
15 37	FS1 FS4	A2 A2	D D
16 38	FS2 FS4	A2 A2	D D
17 39	FS3 SWEEP	A2 ASP140	D D
18 40	ST1 SWEEP	A2 ASP139 P1-11	B B
19 41	ST2 +15V	A2 P1-29	B NC
20 42	ST3 +14.5V	A2 A7	B D
21 43	ST4 GND	A2 A16	B NC
22 44	ST5 ST6	A2 A2	B B

*SEE NOTE 8

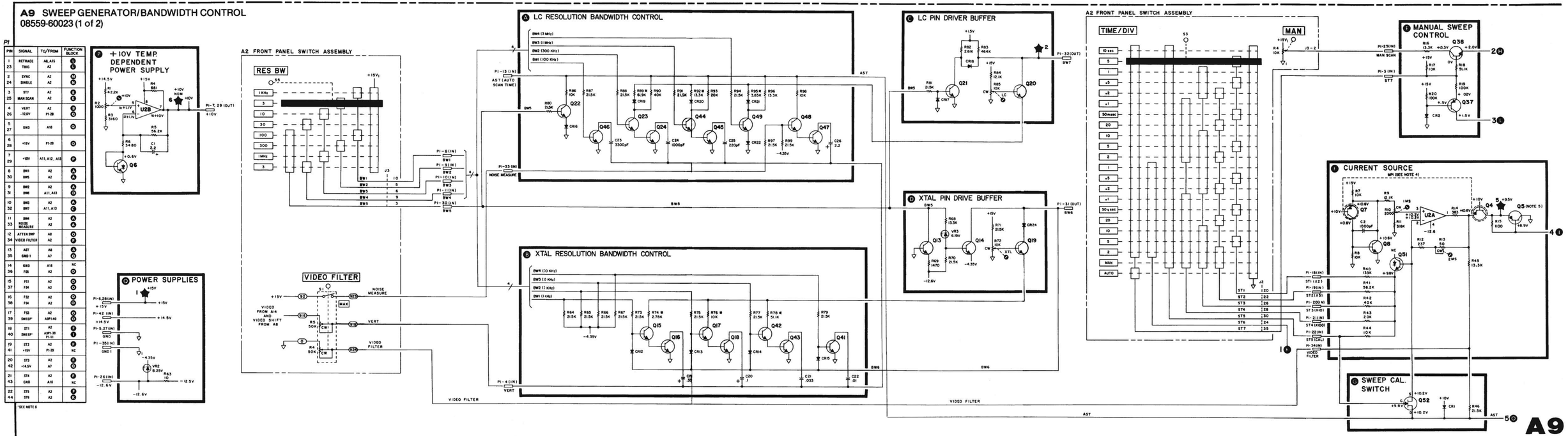

SERIAL PREFIX: 2107A01633

FIGURE 8-40. SWEEP GENERATOR/BANDWIDTH CONTROL ASSEMBLY A9, SCHEMATIC DIAGRAM (1 OF 2) (SERIAL PREFIX 2107A01633)

A9 SWEEP GENERATOR/BAND WIDTH CONTROL ASSEMBLY
08559-60023 (2 of 2)

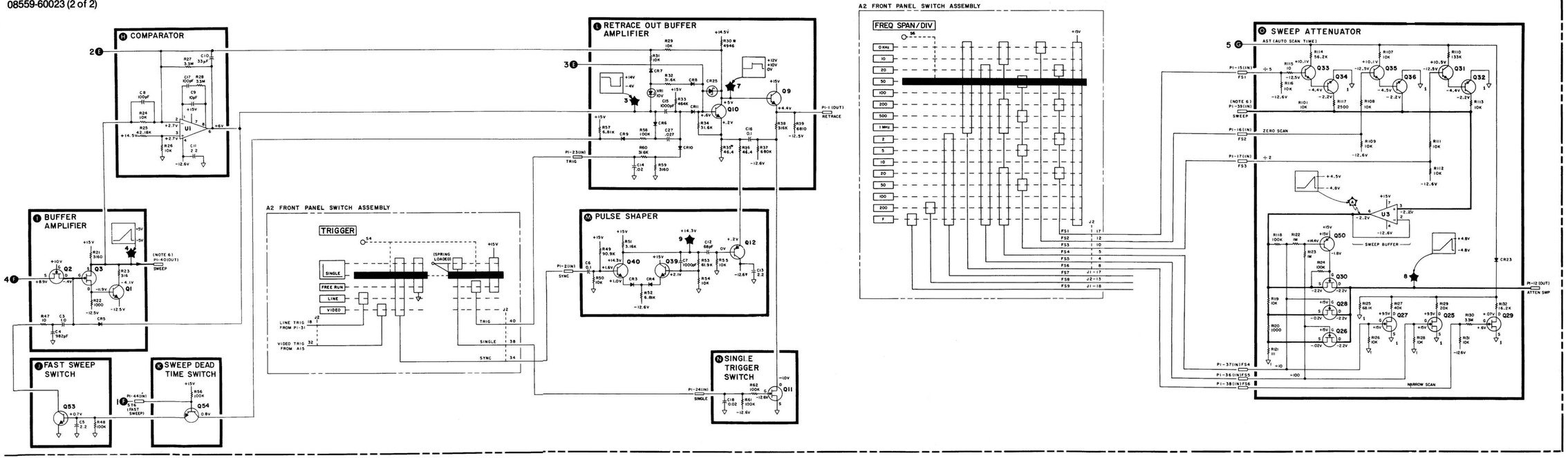

NOTES:

1. REFERENCE DESIGNATORS WITHIN THIS ASSEMBLY ARE ABBREVIATED. PREFIX ABBREVIATION WITH ASSEMBLY NUMBER FOR COMPLETE REFERENCE DESIGNATOR.
2. UNLESS OTHERWISE INDICATED: RESISTANCE IN OHMS (Ω) CAPACITANCE IN MICROFARADS (μF) INDUCTANCE IN MICROHENRIES (μH)
3. * INDICATES FACTORY SELECTED COMPONENT. VALUE SHOWN IS TYPICAL.
4. A8MP1 IS A THERMAL LINK. Q7 PROVIDES TEMPERATURE COMPENSATION FOR Q4.
5. Q5 IS A 1 mA CURRENT LIMITER.
6. P1-40 IS CONNECTED TO P1-39 ON THE MOTHERBOARD ALLOWING THE SWEEP TO BE OUTPUT AT P1-40 AND INPUT AT P1-39.
7. MNEMONIC TABLE

MNEMONIC	DESCRIPTION
AST	AUTO SCAN TIME
ATTEN SWP	ATTENUATED SWEEP VOLTAGE
BW1-7	BANDWIDTH CONTROL LINES
FS1-6	FREQUENCY SPAN CONTROL LINES
ST1-7	SCAN TIME CONTROL LINE (ST6 ENABLES FAST SCAN TIMES)

A9

SERIAL PREFIX: 2107A01633

FIGURE 8-40. SWEEP GENERATOR/BANDWIDTH CONTROL ASSEMBLY A9, SCHEMATIC DIAGRAM (2 OF 2) (SERIAL PREFIX 2107A01633)

Pages 8-117 through 8-127/8-128: THIRD CONVERTER ASSEMBLY A10

Table 8-7. Third Converter Assembly A10, Replaceable Parts

2218A & Below — Delete the following:
A10C57, A10C58, A10C59, A10R52, A10R53, and A10U2.
Chacge A10R6 to HP Part Number 0757-0280, Check Digit 3, RESISTOR 1K 1%.125W F TC=0+-100.
Change A10R8 to HP Part Number 0757-0420, Check Digit 3, RESISTOR 750 1%.125W F TC=0+-100.
Change A10R11 to HP Part Number 0757-0405, Check Digit 4, RESISTOR 162 1% .125W F TC=0+-100.

2019A00721 & Below — Change A10MP5 to HP Part Number 0363-0040, Check Digit 8, CONTACT-FINGER .58-WD .219-FREE-HGT.
Add A10MP6 and A10MP7, HP Part Number 0363-0040, Check Digit 8, CONTACT-FINGER .58-WD .219-FREE-HGT.

1945A00261,263, 269,271,280 & Below — Delete A10MP5, A10MP6, and A10MP7.

1942A & Below — NOTE
The following components have preferred replacements: A10C22, A10C50, A10C54, A10C55, A10CR1, A10CR4, and A10L15. If the instrument does not contain the preferred replacement values, as shown in the Replaceable Parts list and Schematic in the Manual, then these components should all be replaced at the same time.

Figure 8-13. Third Converter Assembly A10, Component Locations

2218A & Below — Replace Figure 8-43 with new Figure 8-43 (SERIAL PREFIX 2218A) included in this Manual Backdating supplement.

Figure 8-44. Third Converter Assembly A10, Schematic Diagram

2218A & Below — Replace funcbion block (J) of Figure 8-44 with new P/O Figure 8-44 (SERIAL PREFIX 2218A) included in this Manual Backdating supplement.
Make the following changes in function block (D).
Change R6 to 1000.
Change R8 to 750.
Change R11 to 162.
Change -10.6 VF to -12.6 VF in two places.

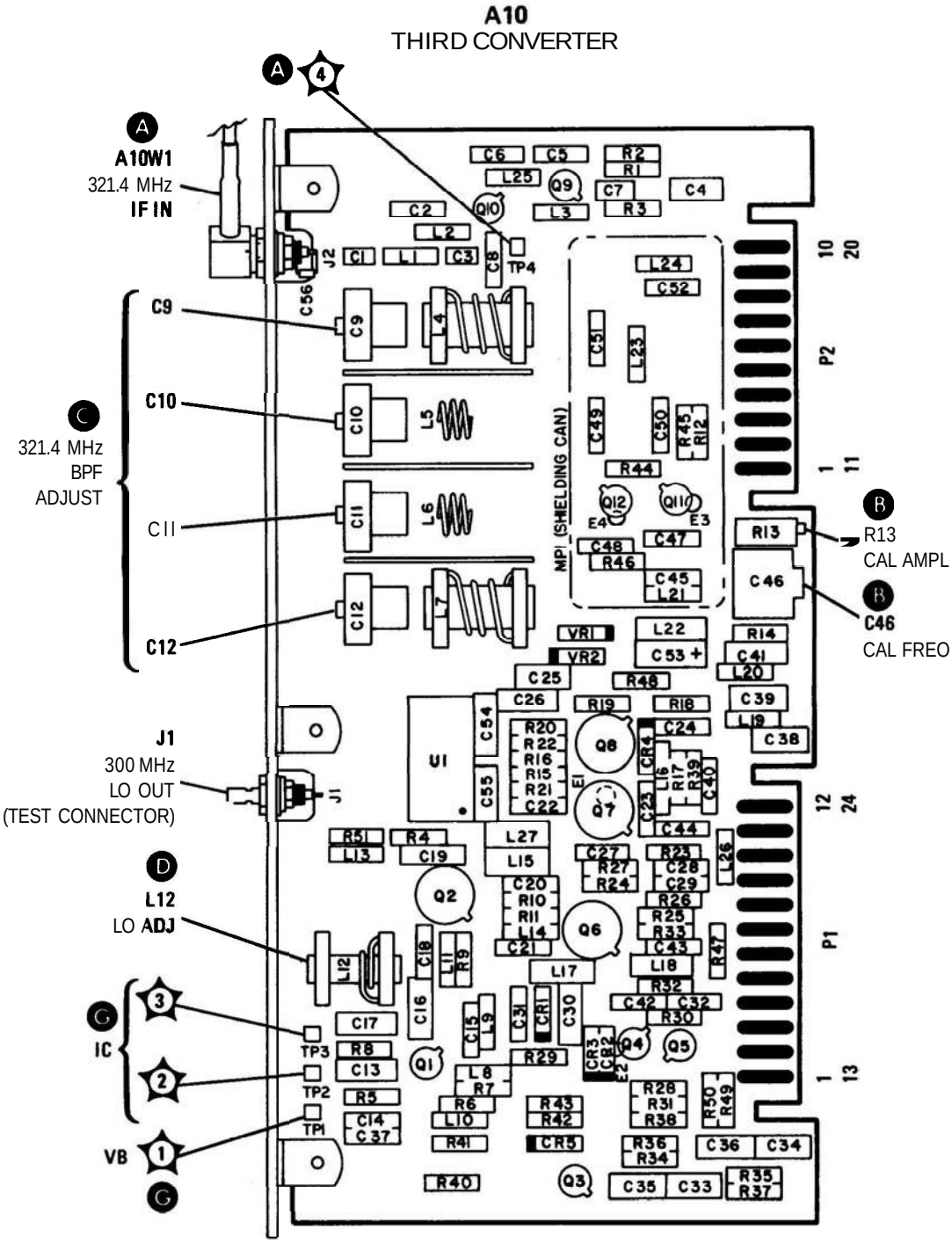

FIGURE 8-43. THIRD CONVERTER ASSEMBLY A10, COMPONENT LOCATIONS (SERIAL PREFIX 2218A)

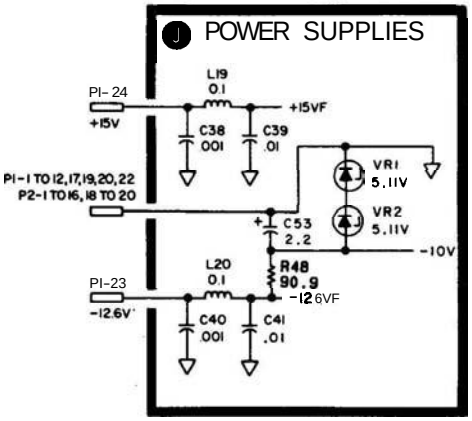

FIGURE 8-44. THIRD CONVERTER ASSEMBLY A10, SCHEMATIC DIAGRAM (SERIAL PREFIX 2218A)

Pages 8-129 through 8-141/8-142: BANDWIDTH FILTER NO. 1 ASSEMBLY A11

Table 8-8: Bandwidth Filter No. 1 Assembly All, Replaceable Parts

1909A & Below

Change A11 to HP Part Number 08559-60057, Check Digit 9, BANDWIDTH FILTER NO. 1.
Add A11C3, HP Part Number 0160-2236, Check Digit 8, CAPACITOR-FXD 1PF +-.25PF 500VDC CER.
Change A11C16*, A11C20*, A11C43*, and A11C64* to HP Part Number 0160-0134, Check Digit 1, CAPACITOR-FXD 220PF +-5% 300VDC MICA.
Change A11C14 and A11C37 to HP Part Number 0160-2250, Check Digit 6, CAPACITOR-FXD 5.1PF +-.25PF 500VDC CER.
Change A11C21 and A11C44 to HP Part Number 0160-3431, Check Digit 7, CAPACITOR-FXD 6.8PF +-. 5PF 500VDC CER.
Change A11R23* and A11R48* to HP Part Number 0757-0441, Check Digit 8, RESISTOR 8.25K 1%.125W F TC=0+-100.
Delete A11R24 and A11R25.
Change A11R18 and A11R41 to HP Part Number 0757-0279, Check Digit 0, RESISTOR 3.16K 1%.125W F TC=0+-100.
Change A11R28 and A11R52 to HP Part Number 0757-0290, Check Digit 5, RESISTOR 6.19K 1%.125W F TC=0+-100.

Figure 8-55. Bandwidth Filter No. 1 Assembly All, Component Locations

1909A & Below

Delete R25.
Change R24 to W1.
Add C3 below R5.

Figure 8 3 6. Bandwidth Filter No. 1 Assembly All, Schematic Diagram

1909A & Below

Change All to HP Part Number 08559-60057.
In function block (B), add a capacitor, C3, 1.0 PF, in parallel with R5.
Replace function block (C) with P/O Figure 8-56 (SERIAL PREFIX 1909A) included in this Manual Backdating supplement.
Make the following changes in function block (D):
Change C14 to 5.1 PF.
Change R23* to 14.7K.
Change R18 to 3160.
Make the following changes in function block (F):
Change C43* to 220 PF.
Change C44 to 6.8 PF.
Change C64* to 220 PF.
Change R52 to 6190.
Make the following changes in function block (G):
Change C37 to 5.1 PF.
Change R48* to 14.7K.
Change R41 to 3160.

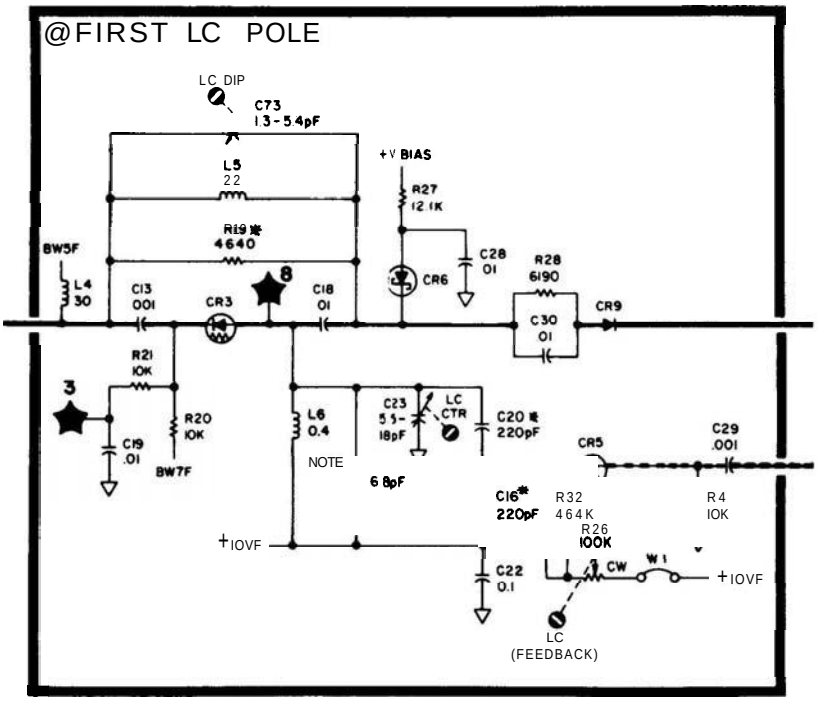

P/O FIGURE 8-56. BANDWIDTH FILTER NO. 1 ASSEMBLY A11, SCHEMATIC DIAGRAM (SERIAL PREFIX 1909A)

Pages 8-143 through 8-155/8-156: STEP GAIN ASSEMBLY A12

Table 8-10. Step Gain Assembly A12, Replaceable Parts

2107A & Below	Delete A12C40, A12C41, and A12C42.

Figure 8-60. Step Gain Assembly A12, Schematic Diagram

2107A & Below	In function block (E), delete C40. In function block (F), delete C41. In function block (G), delete C42.

Pages 8-157 through 8-165/8-166: BANDWIDTH FILTER NO. 2 ASSEMBLY A13

Table 8-11: Bandwidth Filter No. 2 Assembly A13, Replaceable Parts

1909A & Below

Change A13 to HP Part Number 08559-60057, Check Digit 9, BANDWIDTH FILTER NO. 2.
Add A13C3, HP Part Number 0160-2236, Check Digit 8, CAPACITOR-FXD 1PF +-.25PF 500VDC CER.
Change A13C16*, A13C20*, A13C43*, and A13C64* to HP Part Number 0160-0134, Check Digit 1, CAPACITOR-FXD 220PF +-5% 300VDC MICA.
Change A13C21 and A13C44 to HP Part Number 0160-3431, Check Digit 7, CAPACITOR-FXD 6.8PF +-.5PF 500VDC CER.
Change A13C14 and A13C37 to HP Part Number 0160-2250, Check Digit 6, CAPACITOR-FXD 5.1PF +-.25PF 500VDC CER.
Change A13R23* and A13R48* to HP Part Number 0757-0441, Check Digit 8, RESISTOR 8.25K 1%.125W F TC=0+-100.
Delete A13R24 and A13R25.
Change A13R18 and A13R41 to HP Part Number 0757-0279, Check Digit 0, RESISTOR 3.16K 1%.125W F TC=0+-100.
Change A13R28 and A13R52 to HP Part Number 0757-0290, Check Digit 5, RESISTOR 6.19K 1%.125W F TC=0+-100.

Figure 8-62. Bandwidth Filter No. 2 Assembly A13, Component Locations

1909A & Below

Delete R25.
Change R24 to W1.
Add C3 below R5.

Figure 8-63: Bandwidth Filter No. 2 Assembly A13, Schematic Diagram

1909A & Below

Change A13 to HP Part Number 08559-60057.
In function block (B), add a capacitor, C3, 1.0 PF, in parallel with R5.
Replace function block (C) with P/O Figure 8-63 (SERIAL PREFIX 1909A) included in this Manual Backdating supplement.
Make the following changes in function block (D):
Change C14 to 5.1 PF.
Change R23* to 14.7K.
Change R18 to 3160.
Make the following changes in function block (F):
Change C43* to 220 PF.
Change C44 to 6.8 PF.
Change C64* to 220 PF
Change R52 to 6190.
Make the following changes in function block (G):
Change C37 to 5.1 PF.
Change R48* to 14.7K.
Change R41 to 3160.

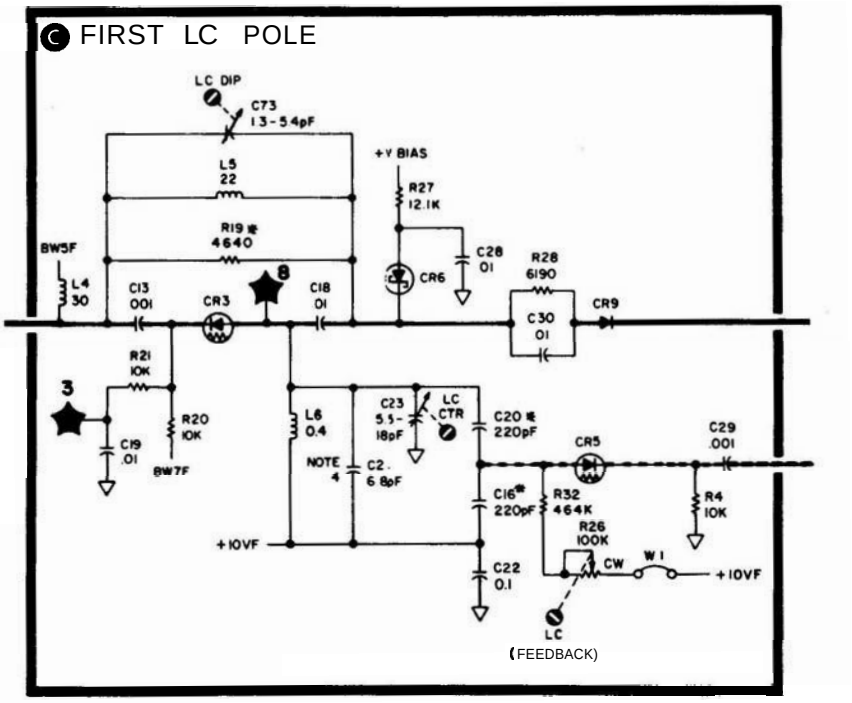

P/O FIGURE 8-63. BANDWIDTH FILTER NO. **2 ASSEMBLY** A13, SCHEMATIC DIAGRAM (SERIAL PREFIX **1909A)**

Pages 8-167 through 8-179/8-180: LOG AMPLIFIER ASSEMBLY A14

Table 8-12. Log Amplifier Assembly A14, Replaceable Parts

2208A & Below — Replace Table 8-12 with new Table 8-12 (SERIAL PREFIX 2208A) included in this Manual Backdating supplement.

Figure 8-68. Log Amplifier Assembly A14, Component Locations

2208A & Below — Replace Figure 8-68 with new Figure 8-68 (SERIAL PREFIX 2208A) included in this Manual Backdating supplement.

Figure 8-69. Log Amplifier Assembly A14, Schematic Diagram, (1 of 2)

2208A & Below — Replace Figure 8-69 (1 of 2) with new Figure 8-69 (1 of 2) (SERIAL PREFIX 2208A) included in this Manual Backdating supplement

Figure 8-69. Log Amplifier Assembly A14, Schematic Diagram (2 of 2)

2208A & Below — Replace Figure 8-69 (2 of 2) with new Figure 8-69 (2 of 2) (SERIAL PREFIX 2208A) included in this Manual Backdating supplement.

Make the following corrections to Figure 8-69 (2 of 2) (SERIAL PREFIX 2208A):

Connect one side of R131 to the collector of Q25.
Connect the other side of R131 to the negative side of C79.
Connect the positive side of C79 to ground.

TABLE 812. LOG AMPLIFIER ASSEMBLY A14, REPLACEABLE PARTS (1 OF 4) (SERIAL PREFIX 2208A)

Reference Designation	HP Part Number	C D	Qty	Description	Mfr Code	Mfr Part Number
A14	08565-60111	4	1	LOG AMPLIFIER	28480	08565-60111
A14C1	0160-2055	9	58	CAPACITOR-FXD .01UF +80-20% 100VDC CER	28480	0160-2055
A14C2	0160-3459	9	7	CAPACITOR-FXD .02UF +-20% 100VDC CER	28480	0160-3459
A14C3	0160-3459	9		CAPACITOR-FXD .02UF +-20% IOOVDC CER	28480	0160-3459
A14C4	0160-3459	9		CAPACITOR-FXD .02UF +-20% 1OOVDC CER	28480	0160-3459
A14C5	0160-3459	9		CAPACITOR-FXD .02UF +-20% 100VDC CER	28480	0160-3459
A14C6	0160-2055	9		CAPACITOR-FXD .01UF +80-20% 1OOVDC CER	20480	0160-2055
A14C7	0160-3459	9		CAPACITOR-FXD .02UF +-20% 100VDC CER	20400	0160-3459
A14C8	0160-3459	9		CAPACITOR-FXD .02UF +-20% 100VDC CER	28480	0160-3459
A14C9	0160-2055	9		CAPACITOR-FXD .01UF +80-20% 100VDC CER	28480	0160-2055
A14C10	0160-2055	9		CAPACITOR-FXD .01UF +80-20% 100VDC CER	28480	0160-2055
A14C11	0160-2055	9		CAPACITOR-FXD .01UF +80-20% 100VDC CFR	28480	0160-2055
A14C12	0160-2055	9		CAPACITOR-FXD .01UF +80 20% 100VDC CER	20480	0160-2055
A14C13	0160-2055	9		CAPACITOR-FXD .01UF +80-20% 100VDC CER	28480	0160-2055
A14C14	0160-2055	9		CAPACITOR-FXD .01UF +80-20% 100VDC CER	28480	0160-2055
A14C15	0160-2055	9		CAPAC ■ TOR-FXD .01UF +80-20% 100VDC CER	28480	0160-2055
A14C16	0160-2055	9		CAPAC ■ TOR-FXD .01UF +80-20% 100VDC CER	20480	0160-2055
A14C17	0160-2055	9		CAPACITOR-FXD .01UF +80-20% IOOVDC CFR	28480	0160-2055
A14C18*	0160-2234	6	1	CAPACITOR-FXD .51PF +-.25PF 500VDC CER	28480	0160-2234
A14C19	0160-2055	9		CAPAC ■ TOR-FXD .01UF +80-20% 100VDC CER	28480	0160-2055
A14C20	0160-2236	8		CAPACITOR-FXD 1PF +-.25PF 500VDC CER	20480	0160-2236
A14C21	0160-2055	9		CAPACITOR-FXD .01UF +80-20% 100VDC CER	29480	0160-2055
A14C22	0160-2055	9		CAPACITOR-FXD .01UF +80-20% IOOVDC CER	28480	0160-2055
A14C23	0160-2055	9		CAPACITOR-FXD .01UF +80-20% 100VDC CFR	28480	0160-2055
A14C24	0160-2055	9		CAPACITOR-FXD .01UF +80 20% 100VDC CER	68480	0160-2055
A14C25	0160-2055	9		CAPACITOR-FXD .01UF +80-20% 100VDC CER	28480	0160-2055
A14C26	0160-2055	9		CAPACITOR-FXD .01UF +80-20% 100VDC CER	20480	0160-2055
A14C27	0160-2055	9		CAPAC ■ TOR-FXD .01UF +80-20% 100VDC CER	28480	0160-2055
A14C28	0180-0228	6	1	CAPACITOR-FXD 22UF+-10% 15VDC TA	56287	150D226X9015B2
A14C29	0160-2055	9		CAPACITOR-FXD .01UF +DO-20% 100VDC CER	20480	0160-2055
A14C30*	0160-2236	8	5	CAPACITOR-FXD 1PF +-.25PF 500VDC CER	28480	0160-2236
A14C31	0160-2055	9		CAPACITOR-FXD .01UF +80-20% IOOVDC CER	28480	0160-2055
A14C32	0160-2055	9		CAPACITOR-FXD .01UF +80-20% 100VDC CER	28480	0160-2055
A14C33	0160-2055	9		CAPACITOR-FXD .01UF +80-20% IOOVDC CER	28400	0160-2055
A14C34	0160-2055	9		CAPACITOR-FXD .OIUF +80-20% 1OOVDC CER	28480	0160-2055
A14C35	0160-2055	9		CAPACITOR-FXD .01UF +80-20% IOOVDC CER	28480	0160-2055
A14C36	0160-2055	9		CAPACITOR-FXD .OIUF +80-20% 1OOVDC CER	28480	0160-2055
A14C37	0160-2055	9		CAPACITOR-FXD .01UF +80-20% IOOVDC CER	28480	0160-2055
A14C38	0160-2055	9		CAPACITOR-FXD .OIUF +80-20% 1OOVDC CER	20480	0160-2055
A14C39	0160-2055	9		CAPACITOR-FXD .01UF +80-20% 100VDC CER	28480	0160-2055
A14C40*	0160-2236	8		CAPACITOR-FXD 1PF +-.25PF 500VDC CER	20480	0160-2236
A14C41	0160-2055	9		CAPACITOR-FXD .01UF +80-20% IOOVDC CER	20480	0160-2055
A14C42	0160-2055	9		CAPACITOR-FXD .01UF +80-20% 1OOVDC CER	38480	0160-2055
A14C43	0160-2055	9		CAPACITOR-FXD .01UF +80-20% IOOVDC CFR	20480	0160-2055
A14C44	0160-2055	9		CAPACITOR-FXD .01UF +80-20% 1OOVDC CER	28480	0160-2055
A14C45	0160-2055	9		CAPACITOR-FXD .01UF +80-20% IOOVDC CER	20480	0160-2055
A14C46	0160-2055	9		CAPACITOR-FXD .01UF +80-20% IOOVDC CER	20480	0160-2055
A14C47	0160-2055	9		CAPACITOR-FXD .01UF +80-20% IOOVDC CER	20480	0160-2055
A14C48	0160-2055	9		CAPACITOR-FXD .01UF +80-20% 100VDC CER	28480	0160-2055
A14C49	0160-2055	9		CAPACITOR-FXD .01UF +80-20% 100VDC CER	29480	0160-2055
A14C50	0160-2055	9		CAPACITOR-FXD .01UF +80-20% 100VDC CER	28480	0160-2055
A14C51	0160-3459	9		CAPACITOR-FXD .02UF +-20% IOOVDC CER	28480	0160-3459
A14C52*	0160-2236	8		CAPACITOR-FXD IPF +-.25PF SOOVDC CER	28480	0160-2236
A14C53	0160-2055	9		CAPACITOR-FXD .01UF +80-20% 100VDC CFR	28480	0160-2055
A14C54	0160-2055	9		CAPACITOR-FXD .01UF +80-20% 100VDC CCR	28480	0160-2055
A14C55	0160-2055	9		CAPACITOR-FXD .01UF +80-20% 100VDC CER	20480	0160-2055
A14C56	0160-2055	9		CAPACITOR-FXD .01UF +80-20% 1OOVDC CER	28480	0160-2055
A14C57	0160-2256	2	1	CAPACITOR-FXD 9.1PF +-.25PF SOOVDC CCR	28480	0160-2256
A14C58	0160-2055	9		CAPACITOR-FXD .01UF +80-20% IOOVDC CER	28480	0160-2055
A14C59	0160-2055	9		CAPACITOR-FXD .01UF +80-20% IOOVDC CER	28480	0160-2055
A14C60	0160-2055	9		CAPACITOR-FXD .OIUF +80-20% 1OOVDC CER	28480	0160-2055
A14C61	0160-2055	9		CAPACITOR-FXD .01UF +80-20% IOOVDC CER	28480	0160-2055
A14C62	0140-0195	2	1	CAPACITOR-FXD 130PF +-5% 300VDC MICA	72136	DM15F131J0300WV1CR
A14C63	0160-2055	9		CAPACITOR-FXD .01UF +80-20% IOOVDC CER	28480	0160-2055
A14C64	0160-2308	5	1	CAPACITOR-FXD 36PF +-5% 300VDC MICA	28480	0160-2308
A14C65	0160-2240	4	1	CAPACITOR-FXD 2PF +-.25PF SOOVDC CER	28480	0160-2240
A14C66	0160-2055	9		CAPACITOR-FXD .OIUF +80-20% 100VDC CER	28480	0160-2055
A14C67*	0160-2236	8		CAPACITOR-FXD IPF +-.25PF SOOVDC CER	28480	0160-2236
A14C68	0160-2055	9		CAPACITOR-FXD .OIUF +80-20% 100VDC CER	28480	0160-2055
A14C69	0160-2055	9		CAPACITOR-FXD .01UF +80-20% 100VDC CFR	28480	0160-2055
A14C70	0160-2055	9		CAPACITOR-FXD .01UF +80-20% IOOVDC CER	28480	0160-2055

See introduction to this section for ordering information
'Indicates factory selected value

TABLE 8-12. LOG AMPLIFIER ASSEMBLY A14, REPLACEABLE PARTS (2 OF 4) (SERIAL PREFIX 2208A)

Reference Designation	HP Part Number	C D	Qty	Description	Mfr Code	Mfr Part Number
A14C71	0160-2055	9		CAPACITOR-FXD .01UF +80-20% 100VDC CER	28480	0160-2055
A14C72	0160-2055	9		CAPACITOR-FXD .01UF +80-20% 100VDC CER	28480	0160-2055
A14C73	0160-2055	9		CAPACITOR-FXD .01UF +80-20% 100VDC CER	28480	0160-2055
A14C74	0180-2206	4	1	CAPACITOR-FXD 60UF+-10% 6VDC TA	56289	150D606X9006B2
A14C75	0160-2055	9		CAPACITOR-FXD .01UF +80-20% 100VDC CER	28480	0160-2055
A14C76	0160-2055	9		CAPACITOR-FXD .01UF +80-20% 100VDC CER	28480	0160-2055
A14C77	0160-2055	9		CAPACITOR-FXD .01UF +80-20% 100VDC CER	28480	0160-2055
A14C78	0180-0197	8	1	CAPACITOR-FXD 2.2UF+-10% 20VDC TA	56289	150D225X9020A2
A14C79	0160-0128	3	1	CAPACITOR-FXD 2.2UF +-20% 50VDC CER	28480	0160-0128
A14CR1	1901-0040	1	10	DIODE-SWITCHING 30V 50MA 2NS DO-35	28480	1901-0040
A14CR2	1901-0040	1		DIODE-SWITCHING 30V 50MA 2NS DO-35	28480	1901-0040
A14CR3	1901-1085	6	17	DIODE-SM SIG SCHOTTKY	28480	1901-1085
A14CR4	1901-1085	6		DIODE-SM SIG SCHOTTKY	28480	1901-1085
A14CR5	1901-0040	1		DIODE-SWITCHING 30V 50MA 2NS DO-35	28480	1901-0040
A14CR6	1901-0040	1		DIODE-SWITCHING 30V 50MA 2NS DO-35	28480	1901-0040
A14CR7	1901-0040	1		DIODE-SWITCHING 30V 50MA 2NS DO-35	28480	1901-0040
A14CR8	1901-1085	6		DIODE-SM SIG SCHOTTKY	28480	1901-1085
A14CR9	1901-1085	6		DIODE-SM SIG SCHOTTKY	28480	1901-1085
A14CR10	1901-1085	6		DIODE-SM SIG SCHOTTKY	28480	1901-1085
A14CR11	1901-1085	6		DIODE-SM SIG SCHOTTKY	28480	1901-1085
A14CR12	1901-1085	6		DIODE-SM SIG SCHOTTKY	28480	1901-1085
A14CR13	1901-1085	6		DIODE-SM SIG SCHOTTKY	28480	1901-1085
A14CR14	1901-0047	8	3	DIODE-SWITCHING 20V 75MA 10NS	28480	1901-0047
A14CR15	1901-1085	6		DIODE-SM SIG SCHOTTKY	28480	1901-1085
A14CR16	1901-1070	9	2	DIODE-PIN 110V	28480	1901-1070
A14CR17	1901-1085	6		DIODE-SM SIG SCHOTTKY	28480	1901-1085
A14CR18	1901-1070	9		DIODE-PIN 110V	28480	1901-1070
A14CR19	1901-0040	1		DIODE-SWITCHING 30V 50MA 2NS DO-35	28480	1901-0040
A14CR20	1901-1085	6		DIODE-SM SIG SCHOTTKY	28480	1901-1085
A14CR21	1901-1085	6		DIODE-SM SIG SCHOTTKY	28480	1901-1085
A14CR22	1901-1085	6		DIODE-SM SIG SCHOTTKY	28480	1901-1085
A14CR23	1901-1085	6		DIODE-SM SIG SCHOTTKY	28480	1901-1085
A14CR24	1901-0040	1		DIODE-SWITCHING 30V 50MA 2NS DO-35	28480	1901-0040
A14CR25	1901-1085	6		DIODE-SM SIG SCHOTTKY	28480	1901-1085
A14CR26	1901-0047	8		DIODE-SWITCHING 20V 75MA 10NS	28480	1901-0047
A14CR27	1901-1085	6		DIODE-SM SIG SCHOTTKY	28480	1901-1085
A14CR28	1901-1085	6		DIODE-SM SIG SCHOTTKY	28480	1901-1085
A14CR29	1901-0047	8		DIODE-SWITCHING 20V 75MA 10NS	28480	1901-0047
A14CR30	1901-0040	1		DIODE-SWITCHING 30V 50MA 2NS DO-35	28480	1901-0040
A14CR31	1901-0040	1		DIODE-SWITCHING 30V 50MA 2NS DO-35	28480	1901-0040
A14CR32	1901-0040	1		DIODE-SWITCHING 30V 50MA 2NS DO-35	28480	1901-0040
A14E1	9170-0029	3	1	CORE-SHIELDING BEAD	28480	9170-0029
A14L1	9100-1622	7	2	INDUCTOR RF-CH-MLD 24UH 5% .166DX.385LG	28480	9100-1622
A14L2	9140-0105	3	1	INDUCTOR RF-CH-MLD 8.2UH 10%	28480	9140-0105
A14L3	9100-1619	2	7	INDUCTOR RF-CH-MLD 6.8UH 10%	28480	9100-1619
A14L4	9100-1619	2		INDUCTOR RF-CH-MLD 6.8UH 10%	28480	9100-1619
A14L5	9100-1619	2		INDUCTOR RF-CH-MLD 6.8UH 10%	28480	9100-1619
A14L6	9100-1619	2		INDUCTOR RF-CH-MLD 6.8UH 10%	28480	9100-1619
A14L7	9100-1619	2		INDUCTOR RF-CH-MLD 6.8UH 10%	28480	9100-1619
A14L8	9100-1619	2		INDUCTOR RF-CH-MLD 6.8UH 10%	28480	9100-1619
A14L9	9100-1627	2	1	INDUCTOR RF-CH-MLD 39UH 5% .166DX.385LG	28480	9100-1627
A14L10	9100-1629	4	1	INDUCTOR RF-CH-MLD 47UH 5% .166DX.385LG	28480	9100-1629
A14L11	9100-1622	7		INDUCTOR RF-CH-MLD 24UH 5% .166DX.385LG	28480	9100-1622
A14L12	9100-1619	2		INDUCTOR RF-CH-MLD 6.8UH 10%	28480	9100-1619
A14L13	9140-0145	1	1	INDUCTOR RF-CH-MLD 8.2UH 10% .105DX.26LG	28480	9140-0145
A14L14	9100-2269	0	1	INDUCTOR RF-CH-MLD 27UH 10% .105DX.26LG	28480	9100-2269
A14Q1	1854-0071	7	3	TRANSISTOR NPN SI PD=300MW FT=200MHZ	28480	1854-0071
A14Q2	1854-0019	3	14	TRANSISTOR NPN SI TO-18 PD=360MW	28480	1854-0019
A14Q3	1854-0019	3		TRANSISTOR NPN SI TO-18 PD=360MW	28480	1854-0019
A14Q4	1854-0019	3		TRANSISTOR NPN SI TO-18 PD=360MW	28480	1854-0019
A14Q5	1854-0019	3		TRANSISTOR NPN SI TO-18 PD=360MW	28480	1854-0019
A14Q6	1854-0019	3		TRANSISTOR NPN SI TO-18 PD=360MW	28480	1854-0019
A14Q7	1854-0019	3		TRANSISTOR NPN SI TO-18 PD=360MW	28480	1854-0019
A14Q8	1854-0019	3		TRANSISTOR NPN SI TO-18 PD=360MW	28480	1854-0019
A14Q9	1854-0019	3		TRANSISTOR NPN SI TO-18 PD=360MW	28480	1854-0019
A14Q10	1854-0019	3		TRANSISTOR NPN SI TO-18 PD=360MW	28480	1854-0019
A14Q11	1854-0019	3		TRANSISTOR NPN SI TO-18 PD=360MW	28480	1854-0019
A14Q12	1854-0019	3		TRANSISTOR NPN SI TO-18 PD=360MW	28480	1854-0019
A14Q13	1854-0019	3		TRANSISTOR NPN SI TO-18 PD=360MW	28480	1854-0019
A14Q14	1854-0019	3		TRANSISTOR NPN SI TO-18 PD=360MW	28480	1854-0019
A14Q15	1854-0019	3		TRANSISTOR NPN SI TO-18 PD=360MW	28480	1854-0019
A14Q16	1853-0020	4	2	TRANSISTOR PNP SI PD=300MW FT=150MHZ	28480	1853-0020
A14Q17	1853-0007	7	1	TRANSISTOR PNP 2N3251 SI TO-18 PD=360MW	04713	2N3251
A14Q18	1854-0345	8	1	TRANSISTOR NPN 2N5179 SI TO-72 PD=200MW	04713	2N5179
A14Q19	1853-0015	7	1	TRANSISTOR PNP SI PD=200MW FT=500MHZ	28480	1853-0015
A14Q20	1854-0475	5	1	TRANSISTOR-DUAL NPN PD=750MW	28480	1854-0475

See introduction to this section for ordering information
*Indicates factory selected value

TABLE 812. LOG AMPLIFIER ASSEMBLY A14, REPLACEABLE PARTS (3 OF 4) (SERIAL PREFIX 2208A)

Reference Designation	HP Part Number	C D	Qty	Description	Mfr Code	Mfr Part Number
A14Q21	1854-0404	0	1	TRANSISTOR NPN SI TO-18 PD=360MW	28480	1854-0404
A14Q22	1853-0020	4		TRANSISTOR PNP SI PD=300MW FT=150MHZ	28480	1853-0020
A14Q23	1854-0071	7		TRANSISTOR NPN SI PD=300MW FT=200MHZ	28480	1854-0071
A14Q24	1854-0071	7		TRANSISTOR NPN SI PD=300MW FT=200MHZ	28480	1854-0071
A14Q25	1854-0637	1	1	TRANSISTOR NPN 2N2219A SI TO-5 PD=800MW	01295	2N2219A
A14R1	2100-3109	2	2	RESISTOR-TRHR 2K 10% C SIDE-ADJ 17-TRN	02111	43P202
A14R2	2100-3161	6	1	RESISTOR-TRHR 20K 10% C SIDE-ADJ 17-TRN	02111	43P203
A14R3	2100-3109	2		RESISTOR-TRHR 2K 10% C SIDE-ADJ 17-TRN	02111	43P202
A14R4	0757-0442	9	6	RESISTOR 10K 1% .125W F TC=0+-100	24546	C4-1/8-T0-1002-F
A14R5	0757-0279	0		RESISTOR 3.16K 1% .125W F TC=0+-100	24546	C4-1/8-T0-3161-F
A14R6*	0757-0346	2	19	RESISTOR 10 1% .125W F TC=0+-100	24546	C4-1/8-T0-10R0-F
A14R7	0757-0442	9		RESISTOR 10K 1% .125W F TC=0+-100	24546	C4-1/8-T0-1002-F
A14R8*	0757-0280	3	6	RESISTOR 1K 1% .125W F TC=0+-100	24546	C4-1/8-T0-1001-F
A14R9	0757-0439	4	9	RESISTOR 6.81K 1% .125W F TC=0+-100	24546	C4-1/8-T0-6811-F
A14R10	0757-0465	6	2	RESISTOR 100K 1% .125W F TC=0+-100	24546	C4-1/8-T0-1003-F
A14R11	0757-0440	7	2	RESISTOR 7.5K 1% .125W F TC=0+-100	24546	C4-1/8-T0-7501-F
A14R12	0698-3157	3	2	RESISTOR 19.6K 1% .125W F TC=0+-100	24546	C4-1/8-T0-1962-F
A14R13	0698-3444	1	8	RESISTOR 316 1% .125W F TC=0+-100	24546	C4-1/8-T0-316R-F
A14R14	0757-0420	3	1	RESISTOR 750 1% .125W F TC=0+-100	24546	C4-1/8-T0-751-F
A14R15	0698-3136	8	1	RESISTOR 17.8K 1% .125W F TC=0+-100	24546	C4-1/8-T0-1782-F
A14R16*	0698-3443	0	1	RESISTOR 287 1% .125W F TC=0+-100	24546	C4-1/8-T0-287R-F
A14R17	0698-3156	2	1	RESISTOR 14.7K 1% .125W F TC=0+-100	24546	C4-1/8-T0-1472-F
A14R18				NOT ASSIGNED		
A14R19	0698-0085	0	2	RESISTOR 2.61K 1% .125W F TC=0+-100	24546	C4-1/8-T0-2611-F
A14R20	0757-0279	0		RESISTOR 3.16K 1% .125W F TC=0+-100	24546	C4-1/8-T0-3161-F
A14R21	0757-0289	2	12	RESISTOR 13.3K 1% .125W F TC=0+-100	19701	MF4C1/8-T0-1332-F
A14R22	0757-0346	2		RESISTOR 10 1% .125W F TC=0+-100	24546	C4-1/8-T0-10R0-F
A14R23	0698-3444	1		RESISTOR 316 1% .125W F TC=0+-100	24546	C4-1/8-T0-316R-F
A14R24	0757-0279	0		RESISTOR 3.16K 1% .125W F TC=0+-100	24546	C4-1/8-T0-3161-F
A14R25	0698-3444	1		RESISTOR 316 1% .125W F TC=0+-100	24546	C4-1/8-T0-316R-F
A14R26	0757-0290	5		RESISTOR 6.19K 1% .125W F TC=0+-100	19701	MF4C1/8-T0-6191-F
A14R27	0757-0346	2		RESISTOR 10 1% .125W F TC=0+-100	24546	C4-1/8-T0-10R0-F
A14R28	0698-3449	6	1	RESISTOR 28.7K 1% .125W F TC=0+-100	24546	C4-1/8-T0-2872-F
A14R29	0757-0199	3	1	RESISTOR 21.5K 1% .125W F TC=0+-100	24546	C4-1/8-T0-2152-F
A14R30	0698-3152	8	2	RESISTOR 3.48K 1% .125W F TC=0+-100	24546	C4-1/8-T0-3481-F
A14R31	0757-0279	0		RESISTOR 3.16K 1% .125W F TC=0+-100	24546	C4-1/8-T0-3161-F
A14R32	0757-0289	2		RESISTOR 13.3K 1% .125W F TC=0+-100	19701	MF4C1/8-T0-1332-F
A14R33	0757-0289	2		RESISTOR 13.3K 1% .125W F TC=0+-100	19701	MF4C1/8-T0-1332-F
A14R34	0698-3444	1		RESISTOR 316 1% .125W F TC=0+-100	24546	C4-1/8-T0-316R-F
A14R35*	0757-0346	2		RESISTOR 10 1% .125W F TC=0+-100	24546	C4-1/8-T0-10R0-F
A14R36	0698-3438	3	2	RESISTOR 147 1% .125W F TC=0+-100	24546	C4-1/8-T0-147R-F
A14R37	0757-0439	4		RESISTOR 6.81K 1% .125W F TC=0+-100	24546	C4-1/8-T0-6811-F
A14R38	0757-0279	0		RESISTOR 3.16K 1% .125W F TC=0+-100	24546	C4-1/8-T0-3161-F
A14R39	0698-3154	0	1	RESISTOR 4.22K 1% .125W F TC=0+-100	24546	C4-1/8-T0-4221-F
A14R40	0757-0280	3		RESISTOR 1K 1% .125W F TC=0+-100	24546	C4-1/8-T0-1001-F
A14R41	0757-0346	2		RESISTOR 10 1% .125W F TC=0+-100	24546	C4-1/8-T0-10R0-F
A14R42	0757-0346	2		RESISTOR 10 1% .125W F TC=0+-100	24546	C4-1/8-T0-10R0-F
A14R43	0757-0289	2		RESISTOR 13.3K 1% .125W F TC=0+-100	19701	MF4C1/8-T0-1332-F
A14R44				NOT ASSIGNED		
A14R45	0757-0439	4		RESISTOR 6.81K 1% .125W F TC=0+-100	24546	C4-1/8-T0-6811-F
A14R46*	0698-0083	8	2	RESISTOR 1.96K 1% .125W F TC=0+-100	24546	C4-1/8-T0-1961-F
A14R47	0757-0279	0		RESISTOR 3.16K 1% .125W F TC=0+-100	24546	C4-1/8-T0-3161-F
A14R48	0757-0289	2		RESISTOR 13.3K 1% .125W F TC=0+-100	19701	MF4C1/8-T0-1332-F
A14R49	0757-0416	7	2	RESISTOR 511 1% .125W F TC=0+-100	24546	C4-1/8-T0-511R-F
A14R50	0698-3444	1		RESISTOR 316 1% .125W F TC=0+-100	24546	C4-1/8-T0-316R-F
A14R51*	0757-0346	2		RESISTOR 10 1% .125W F TC=0+-100	24546	C4-1/8-T0-10R0-F
A14R52	0757-0465	6		RESISTOR 100K 1% .125W F TC=0+-100	24546	C4-1/8-T0-1003-F
A14R53	0698-0083	8		RESISTOR 1.96K 1% .125W F TC=0+-100	24546	C4-1/8-T0-1961-F
A14R54	0757-0280	3		RESISTOR 1K 1% .125W F TC=0+-100	24546	C4-1/8-T0-1001-F
A14R55	0698-3151	7		RESISTOR 2.87K 1% .125W F TC=0+-100	24546	C4-1/8-T0-2871-F
A14R56	0757-0458	7	1	RESISTOR 51.1K 1% .125W F TC=0+-100	24546	C4-1/8-T0-5112-F
A14R57	0757-0346	2		RESISTOR 10 1% .125W F TC=0+-100	24546	C4-1/8-T0-10R0-F
A14R58	0757-0289	2		RESISTOR 13.3K 1% .125W F TC=0+-100	19701	MF4C1/8-T0-1332-F
A14R59	0757-0442	9		RESISTOR 10K 1% .125W F TC=0+-100	24546	C4-1/8-T0-1002-F
A14R60	0698-3157	3		RESISTOR 19.6K 1% .125W F TC=0+-100	24546	C4-1/8-T0-1962-F
A14R61	0757-0442	9		RESISTOR 10K 1% .125W F TC=0+-100	24546	C4-1/8-T0-1002-F
A14R62	0698-3152	8		RESISTOR 3.48K 1% .125W F TC=0+-100	24546	C4-1/8-T0-3481-F
A14R63	0698-3159	5	1	RESISTOR 26.1K 1% .125W F TC=0+-100	24546	C4-1/8-T0-2612-F
A14R64*	0757-0279	0	10	RESISTOR 3.16K 1% .125W F TC=0+-100	24546	C4-1/8-T0-3161-F
A14R65	0757-0290	5		RESISTOR 6.19K 1% .125W F TC=0+-100	19701	MF4C1/8-T0-6191-F
A14R66	0757-0439	4		RESISTOR 6.81K 1% .125W F TC=0+-100	24546	C4-1/8-T0-6811-F
A14R67	0757-0379	1	1	RESISTOR 12.1 1% .125W F TC=0+-100	19701	MF4C1/8-T0-12R1-F
A14R68	0757-0289	2		RESISTOR 13.3K 1% .125W F TC=0+-100	19701	MF4C1/8-T0-1332-F
A14R69	0757-0448	7		RESISTOR 7.5K 1% .125W F TC=0+-100	24546	C4-1/8-T0-7501-F
A14R70	0757-0463	4	1	RESISTOR 82.5K 1% .125W F TC=0+-100	24546	C4-1/8-T0-8252-F

See introduction to this section for ordering information
*Indicates factory selected value

TABLE 812. LOG AMPLIFIER ASSEMBLY A14, REPLACEABLE PARTS (4 OF 4) (SERIAL PREFIX 2208A)

Reference Designation	HP Part Number	C D	Qty	Description	Mfr Code	Mfr Part Number
A14R71	0698-3444	1		RESISTOR 316 1% .125W F TC=0+-100	24546	C4-1/8-T0-316R-F
A14R72	0757-0290	5		RESISTOR 6.191 1% .125W F TC=0+-100	19701	MF4C1/8-T0-6191-F
A14R73*				NOT ASSIGNED		
A14R74*	0698-3151	7	2	RESISTOR 2.87K 1% .125W F TC=0+-100	24546	C4-1/8-T0-2871-F
A14R75	0757-0442	9		RESISTOR 10K 1% .125W F TC=0+-100	24546	C4-1/8-T0-1002-F
A14R76	0757-0289	2		RESISTOR 13.3K 1% .125W F TC=0+-100	19701	MF4C1/8-T0-1332-F
A14R77	0757-0280	3		RESISTOR 1K 1% .125W F TC=0+-100	24546	C4-1/8-T0-1001-F
A14R78	0757-0346	2		RESISTOR 10 1% .125W F TC=0+-100	24546	C4-1/8-T0-10R0-F
A14R79	0757-0346	2		RESISTOR 10 1% .125W F TC=0+-100	24546	C4-1/8-T0-10R0-F
A14R80	0757-0439	4		RESISTOR 6.81K 1% .125W F TC=0+-100	24546	C4-1/8-T0-6811-F
A14R81	0757-0403	2	1	RESISTOR 121 1% .125W F TC=0+-100	24546	C4-1/8-T0-121R-F
A14R82*	0757-0290	5	8	RESISTOR 6.19K 1% .125W F TC=0+-100	19701	MF4C1/8-T0-6191-F
A14R83	0757-0418	9	1	RESISTOR 619 1% .125W F TC=0+-100	24546	C4-1/8-T0-619R-F
A14R84	0757-0462	1	1	RESISTOR 110 1% .125W F TC=0+-100	24546	C4-1/8-T0-111-F
A14R85	0757-0279	0		RESISTOR 3.16K 1% .125W F TC=0+-100	24546	C4-1/8-T0-3161-F
A14R86				NOT ASSIGNED		
A14R87	0757-0289	2		RESISTOR 13.3K 1% .125W F TC=0+-100	19701	MF4C1/8-T0-1332-F
A14R88	0757-0416	7		RESISTOR 511 1% .125W F TC=0+-100	24546	C4-1/8-T0-511R-F
A14R89	0757-0346	2		RESISTOR 10 1% .125W F TC=0+-100	24546	C4-1/8-T0-10R0-F
A14R90	0698-3444	1		RESISTOR 316 1% .125W F TC=0+-100	24546	C4-1/8-T0-316R-F
A14R91	0757-0439	4		RESISTOR 6.811 1% .125W F TC=0+-100	24546	C4-1/8-T0-6811-F
A14R92	0757-0346	2		RESISTOR 10 1% .125W F TC=0+-100	24546	C4-1/8-T0-10R0-F
A14R93	0757-0438	3	1	RESISTOR 5.11K 1% .125W F TC=0+-100	24546	C4-1/8-T0-5111-F
A14R94	0757-0346	2		RESISTOR 10 1% .125W F TC=0+-100	24546	C4-1/8-T0-10R0-F
A14R95	0757-0289	2		RESISTOR 13.3K 1% .125W F TC=0+-100	19701	MF4C1/8-T0-1332-F
A14R96	0757-0280	3		RESISTOR 1K 1% .125W F TC=0+-100	24546	C4-1/8-T0-1001-F
A14R97	0757-0346	2		RESISTOR 10 1% .125W F TC=0+-100	24546	C4-1/8-T0-10R0-F
A14R98	0757-0346	2		RESISTOR 10 1% .125W F TC=0+-100	24546	C4-1/8-T0-10R0-F
A14R99	0757-0346	2		RESISTOR 10 1% .125W F TC=0+-100	24546	C4-1/8-T0-10R0-F
A14R100	0757-0346	2		RESISTOR 10 1% .125W F TC=0+-100	24546	C4-1/8-T0-10R0-F
A14R101	0757-0439	4		RESISTOR 6.81K 1% .125W F TC=0+-100	24546	C4-1/8-T0-6811-F
A14R102*	0757-0290	5		RESISTOR 6.19K 1% .125W F TC=0+-100	17701	MF4C1/8-T0-6191-F
A14R103	0757-0405	4	1	RESISTOR 162 1% .125W F TC=0+-100	24546	C4-1/8-T0-162R-F
A14R104	0757-0279	0		RESISTOR 3.16K 1% .125W F TC=0+-100	24546	C4-1/8-T0-3161-F
A14R105	0757-0280	3		RESISTOR 1K 1% .125W F TC=0+-100	24546	C4-1/8-T0-1001-F
A14R106	0757-0289	2		RESISTOR 13.3K 1% .125W F TC=0+-100	19701	MF4C1/8-T0-1332-F
A14R107	0757-0288	1	1	RESISTOR 9.09K 1% .125W F TC=0+-100	19701	MF4C1/8-T0-9091-F
A14R108	0698-3444	1		RESISTOR 316 1% .125W F TC=0+-100	24546	C4-1/8-T0-316R-F
A14R109	0757-0439	4		RESISTOR 6.81K 1% .125W F TC=0+-100	24546	C4-1/8-T0-6811-F
A14R110	0757-0346	2		RESISTOR 10 1% .125W F TC=0+-100	24546	C4-1/8-T0-10R0-F
A14R111	0698-3158	4	1	RESISTOR 23.7K 1% .125W F TC=0+-100	24546	C4-1/8-T0-2372-F
A14R112	0698-3160	8	3	RESISTOR 31.6K 1% .125W F TC=0+-100	24546	C4-1/8-T0-3162-F
A14R113	0698-3160	8		RESISTOR 31.6K 1% .125W F TC=0+-100	24546	C4-1/8-T0-3162-F
A14R114	0698-3160	8		RESISTOR 31.6K 1% .125W F TC=0+-100	24546	C4-1/8-T0-3162-F
A14R115	0757-0346	2		RESISTOR 10 1% .125W F TC=0+-100	24546	C4-1/8-T0-10R0-F
A14R116	0757-0289	2		RESISTOR 13.3K 1% .125W F TC=0+-100	19701	MF4C1/8-T0-1332-F
A14R117	0698-0085	0		RESISTOR 2.61K 1% .125W F TC=0+-100	24546	C4-1/8-T0-2611-F
A14R118	0757-0439	4		RESISTOR 6.81K 1% .125W F TC=0+-100	24546	C4-1/8-T0-6811-F
A14R119*	0757-0290	5		RESISTOR 6.19K 1% .125W F TC=0+-100	19701	MF4C1/8-T0-6191-F
A14R120	0757-0279	0		RESISTOR 3.16K 1% .125W F TC=0+-100	24546	C4-1/8-T0-3161-F
A14R121	0698-3438	3		RESISTOR 147 1% .125W F TC=0+-100	24546	C4-1/8-T0-147R-F
A14R122	0757-0447	4	2	RESISTOR 16.2K 1% .125W F TC=0+-100	24546	C4-1/8-T0-1622-F
A14R123	0757-0447	4		RESISTOR 16.2K 1% .125W F TC=0+-100	24546	C4-1/8-T0-1622-F
A14R124	0757-0441	8	1	RESISTOR 8.25K 1% .125W F TC=0+-100	24546	C4-1/8-T0-8251-F
A14R125	0698-3260	9	1	RESISTOR 464K 1% .125W F TC=0+-100	28480	0698-3260
A14R126	0757-0442	9		RESISTOR 10K 1% .125W F TC=0+-100	24546	C4-1/8-T0-1002-F
A14R127	0757-0421	4	1	RESISTOR 825 1% .125W F TC=0+-100	24546	C4-1/8-T0-825R-F
A14R128	0757-0290	5		RESISTOR 6.19K 1% .125W F TC=0+-100	19701	MF4C1/8-T0-6191-F
A14R129	0757-0290	5		RESISTOR 6.19K 1% .125W F TC=0+-100	19701	MF4C1/8-T0-6191-F
A14R130*	0757-0467	8	1	RESISTOR 121K 1% .125W F TC=0+-100	24546	C4-1/8-T0-1213-F
A14R131	0698-3429	2	1	RESISTOR 19.6 1% .125W F TC=0+-100	03888	PME55-1/8-T0-19R6-F
A14U1	1826-0092	3	1	IC OP AMP GP DUAL TO-99 PKC	28480	1826-0092
A14VR1	1902-0041	4	1	DIODE-ZNR 5.11V 5% DO-35 PD=.4W	28480	1902-0041
A14VR2	1902-0048	1	1	DIODE-ZNR 6.81V 5% DO-35 PD=.4W	28488	1902-0048
A14VR3	1902-0579	3	1	DIODE-ZNR 5.1V 5% PD=1W IR=10UA	28480	1902-0579
				h14 HISCELLANEOUS PARTS		
	08559-00010	8	1	COVER, LOG AMPLIFIER	28488	08559-00010

See introduction to this section for ordering information
*Indicates factory selected value

A14
LOG AMPLIFIER

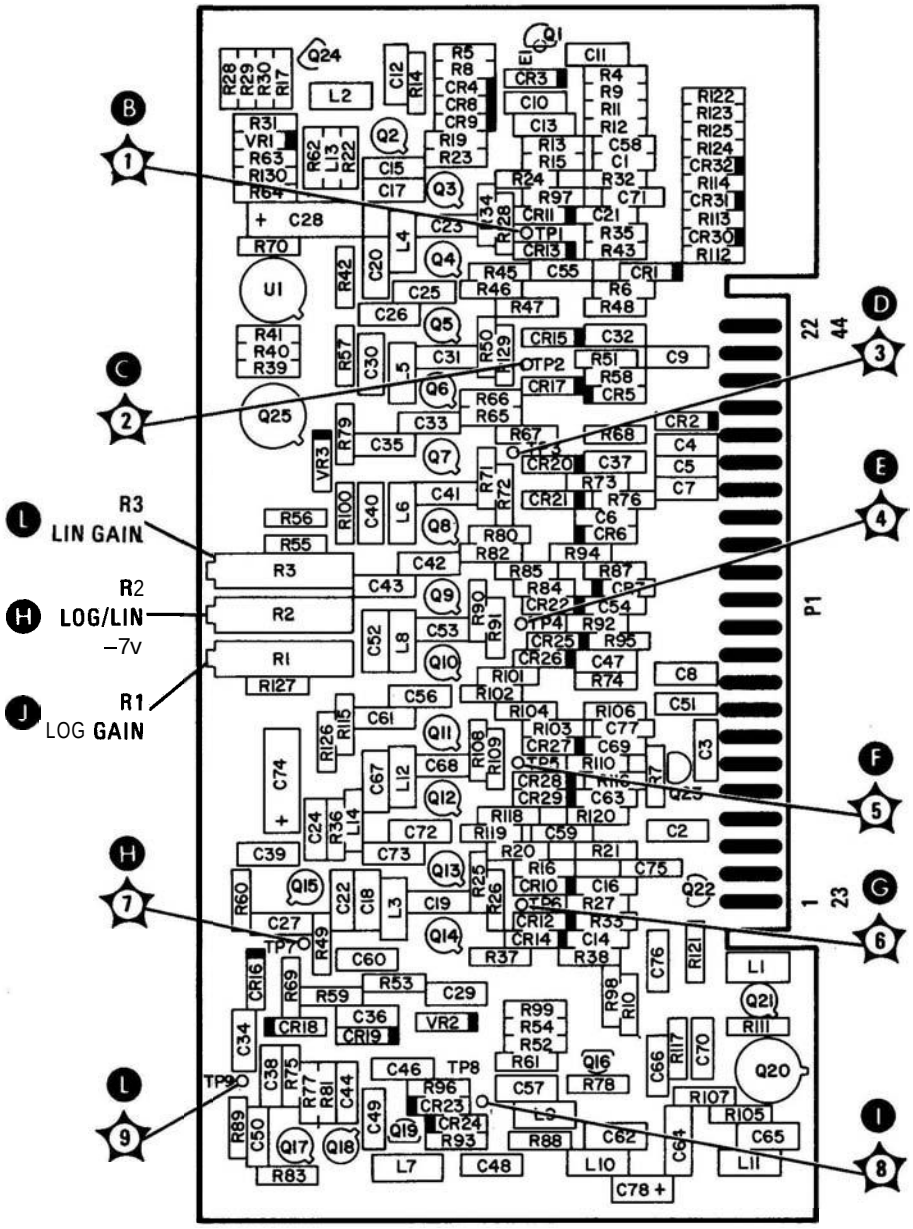

FIGURE 8-68. LOG AMPLIFIER ASSEMBLY A14, COMPONENT LOCATIONS (SERIAL PREFIX 2208A)

A14 LOG AMPLIFIER ASSEMBLY
08565-60111 (2 of 2)

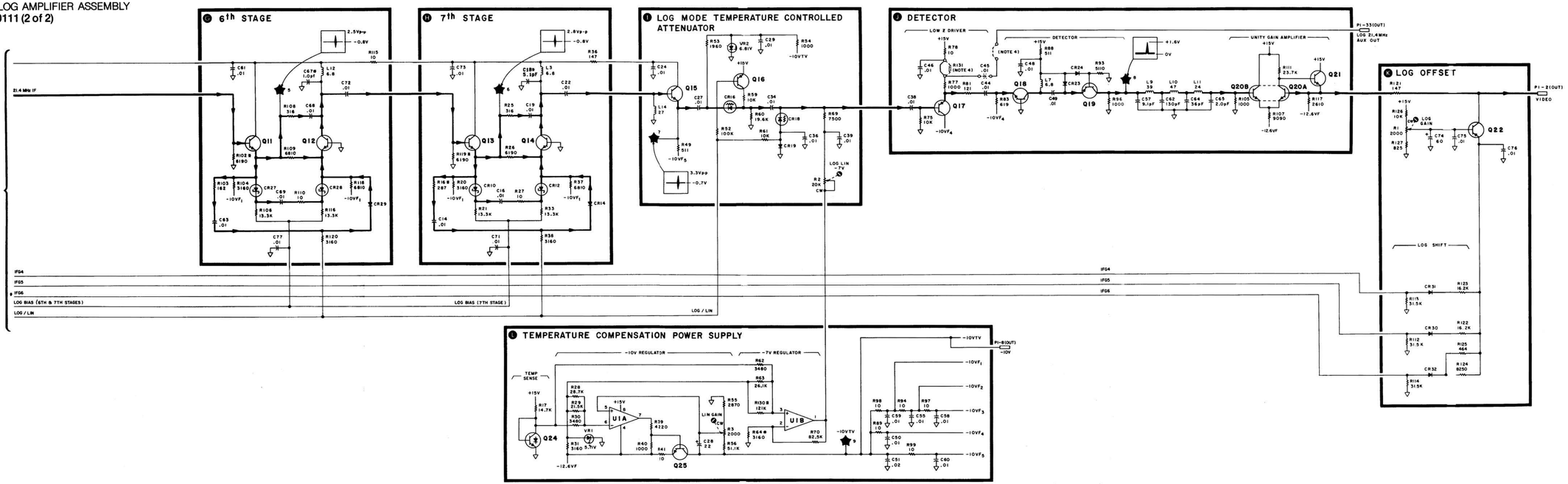

NOTES:

1. REFERENCE DESIGNATORS WITHIN THIS ASSEMBLY ARE ABBREVIATED. PREFIX ASSREVIATION WITH ASSEMBLY NUMBER FOR COMPLETE REFERENCE DESIGNATOR.
2. UNLESS OTHERWISE INDICATED: RESISTANCE IN OHMS (Ω) CAPACITANCE IN MICROFARADS (μF) INDUCTANCE IN MICROHENRIES (μH)
3. ASTERISK (*) INDICATES FACTORY SELECTED COMPONENT. NOMINAL VALUE IS SHOWN.
4. AUXILIARY LOG OUTPUT AS OPTION ONLY. C45, R131 AND JUMPER USED ONLY FOR OPTIONAL AUXILIARY LOG OUTPUT.
5. INPUT ATTEN CONTROL IS ACTUATED BY PUSHING IN ON THE CONTROL KNOB WHICH COUPLES INPUT ATTEN TO REFERENCE LEVEL.
6. INPUT ATTEN AND REFERENCE LEVEL CONTROLS ARE MECHANICALLY COUPLED TO PROVIDE TEN REFERENCE LEVEL SETTINGS FOR EACH INPUT ATTENUATION SETTING.
7. MNEMONIC TABLE:

MNEMONIC	DESCRIPTION
IFG4 IFG5 IFG6	IF GAIN CONTROL LINES
LOG/LIN	SELECTS EITHER LOG OR LINEAR

A14

SERIAL PREFIX: 2208A

FIGURE 8-69. LOG AMPLIFIER ASSEMBLY A14, SCHEMATIC DIAGRAM (2 OF 2) (SERIAL PREFIX 2208A)

A14 LOG AMPLIFIER ASSEMBLY
08565-60111 (1 of 2)

P1

PIN	SIGNAL	TO/FROM	FUNCTION BLOCK
1 23	GND	A16	M
2 24	VIDEO GND	A2 A16	B M
3 25	GND -12.6V	A16 P1-28	M M
4 26	GND	A16	M
5 27	GND +15V	A16 P1-29	M M
6 28	GND	A16	M
7 29	GND	A16	M
8 30	-10V GND	A2 A16	B M
9 31	GND LOG/LIN	A16 A2	M B
10 32	GND	A16	M
11 33	GND LOG 21.4 MHz AUX OUT	A16 NC	M B
12 34	GND	A16	M
13 35	GND	A16	M
14 36	GND	A16	M
15 37	GND	A16	M
16 38	GND IFG4	A16 A2	M B
17 39	GND IFG5	A16 A2	M B
18 40	GND IFG6	A16 A2	M B
19 41	GND	A16	M
20 42	GND	A16	M
21 43	GND	A16	M
22 44	GND 21.4 MHz IF	A16 A13	M B

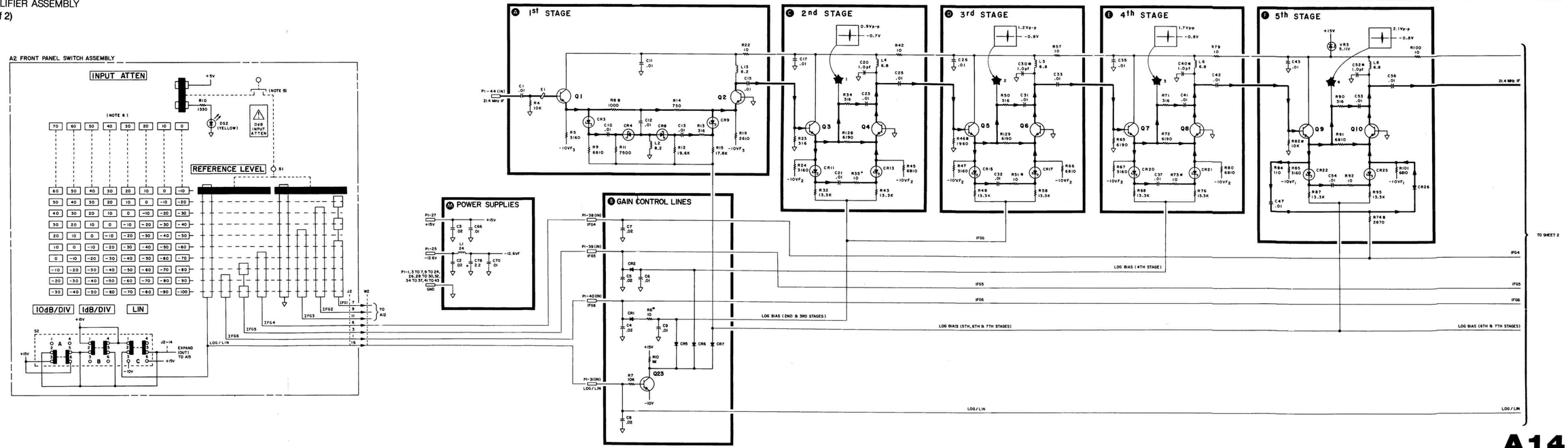

A14

SERIAL PREFIX: 2208A

FIGURE 8-69. LOG AMPLIFIER ASSEMBLY A14, SCHEMATIC DIAGRAM (1 OF 2) (SERIAL PREFIX 2208A)

Pages 8-191 and 8-199/8-200: MOTHERBOARD ASSEMBLY A16

Table 8-14. Motherboard Assembly A16, Replaceable Parts

2236A & Below	Change A16 to HP Part Number 08559-60066, Check Digit 0. Change A16C3 and A16C21 to HP Part Number 0160-2055, Check Digit 9, CAPACITOR-FXD .01UF +80-20% 100VDC CER. Change A16C22 to HP Part Number 0180-2154, Check Digit 1, CAPACITOR-FXD 1900UF +75-10% 15VDC AL. Delete A16Q1. Change A16W1 to HP Part Number 08559-60067, Check Digit 1, HARNESS ASSEMBLY, MAIN FRAME CONNECTOR. Change A16W2 to HP Part Number 08559-60008, Check Digit 0, CABLE ASSEMBLY, YIG.
2208A & Below	Change A16 to HP Part Number 08559-60020, Check Digit 6. Change A16W1 to HP Part Number 08559-60009, Check Digit 1, HARNESS ASSEMBLY, MAIN FRAME CONNECTOR. Delete the following: A16CR1, A16CR2, A16R10, and A16VR3.
1951A, 1945A & Below	Delete A16C6, A16J3, and A16J4.

Figure 8-76. Motherboard Assembly A16, Component Locations

2236A & Below	Replace Figure 8-76 with new Figure 8-76 (SERIAL PREFIX 2236A) included ic this Manual Backdating supplement.
2208A & Below	Make the following changes to Figure 8-76 (SERIAL PREFIX 2236A): Delete CR1, CR2, R10, and VR3.
1951A, 1945A & Below	Delete C6, 53, and 54.

Figure 8-77. Motherboard Assembly A16, Interconnect Diagram

2236A & Below	Replace Figure 8-77 with new Figure 8-77 (SERIAL PREFIX 2236A) included in this Manual Backdating supplement.
2208A & Below	Chacge A16 to HP Part Number 08559-60020. Make the following changes to Figure 8-77 (SERIAL PREFIX 2236A): Delete CR2, VR3, and the 927 line. Delete CR1 and the 8 line. Delete R10 and the 928 line.
1951A, 1945A & Below	At pin 18 of XA10P1, delete C6 and 53. At XA10P2, delete 54 (CAL OUTPUT TO FRONT PANEL).

A16
MOTHERBOARD

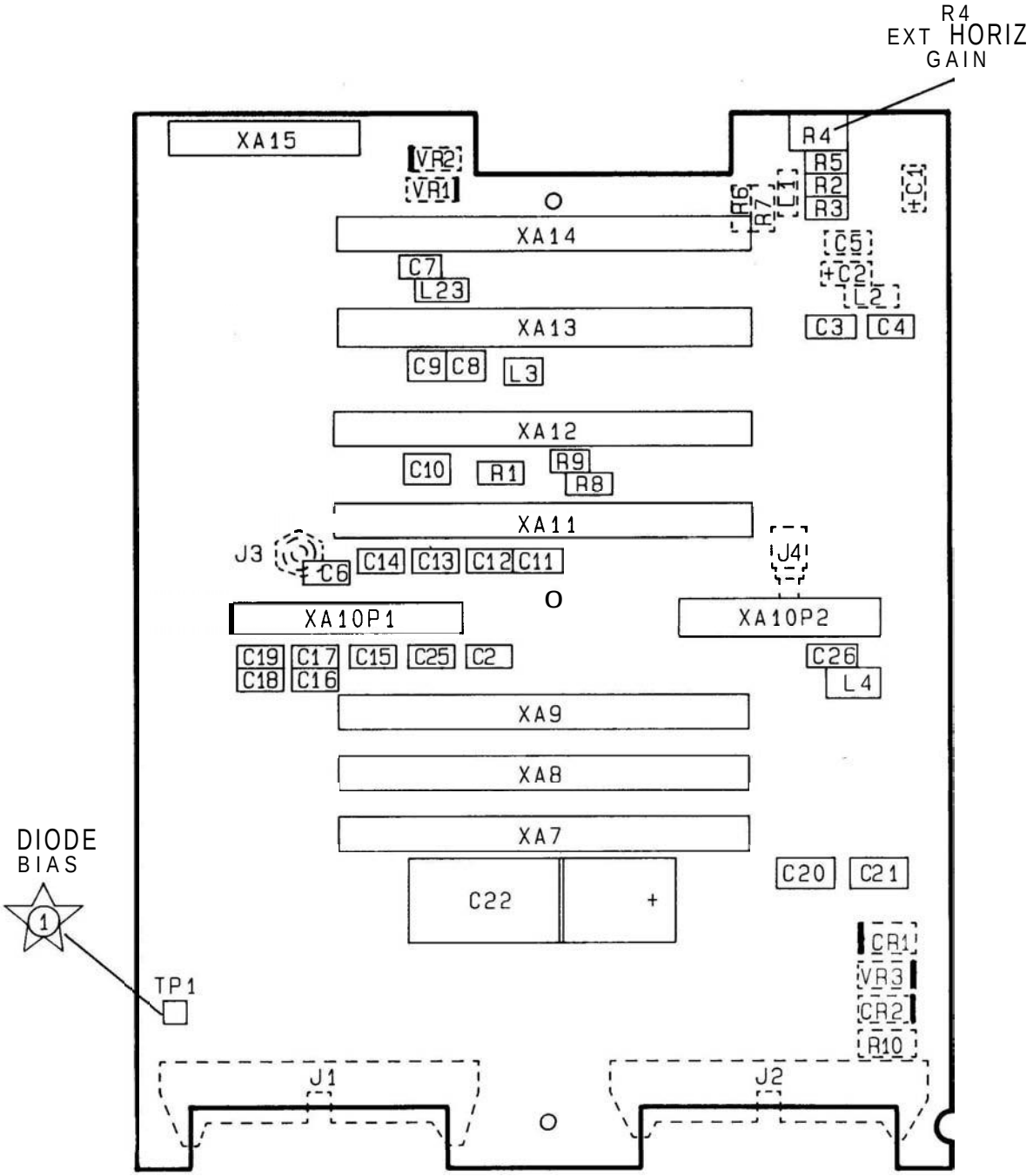

FIGURE 8-76. MOTHERBOARD ASSEMBLY A16, COMPONENT LOCATIONS (SERIAL PREFIX 2236A)

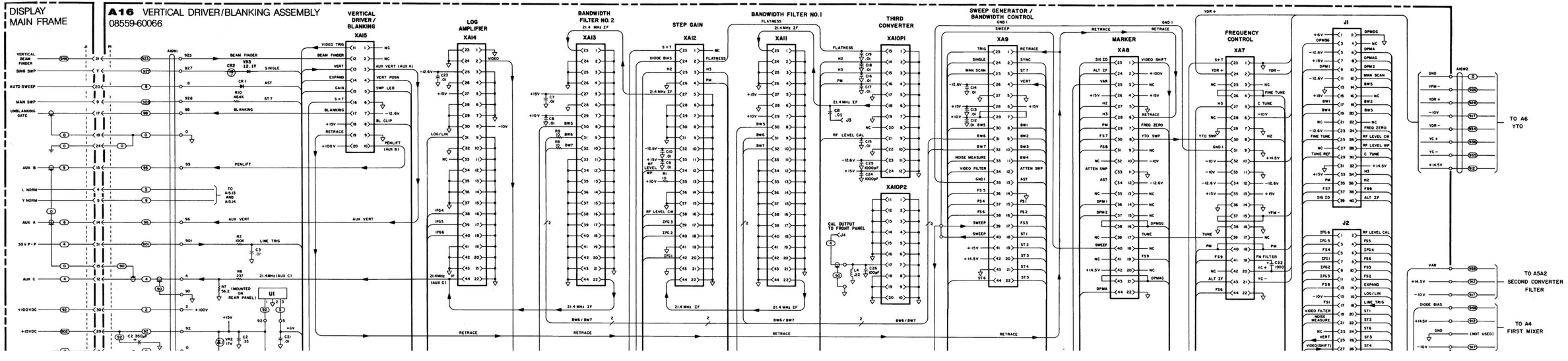
DISPLAY MAIN FRAME
A16 VERTICAL DRIVER/BLANKING ASSEMBLY
08559-60066
VERTICAL DRIVER / BLANKING
XA15
LOG AMPLIFIER
XA14
BANDWIDTH FILTER NO. 2
XA13
STEP GAIN
XA12
BANDWIDTH FILTER NO. 1
XA11
THIRD CONVERTER
XA10P1
XA10P2
SWEEP GENERATOR / BANDWIDTH CONTROL
XA9
MARKER
XA8
FREQUENCY CONTROL
XA7
J1
J2
TO A6 YTO
TO A5A2 SECOND CONVERTER FILTER
TO A4 FIRST MIXER