100 - 900 MHz Antenna Analyzer Layout

Not To Scale

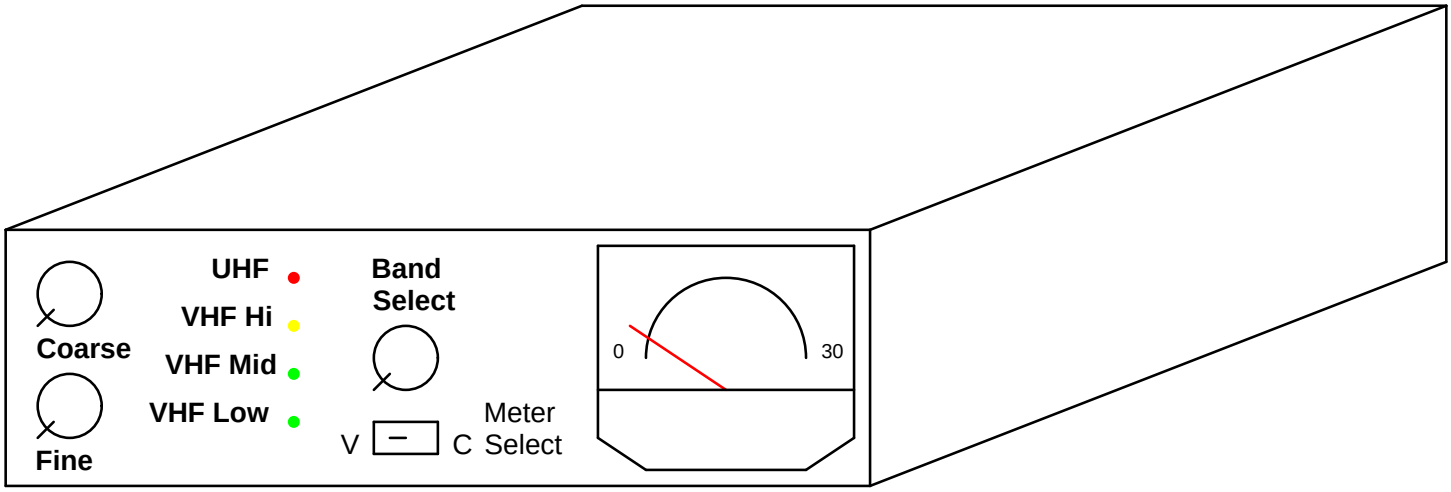

Front Panel Layout

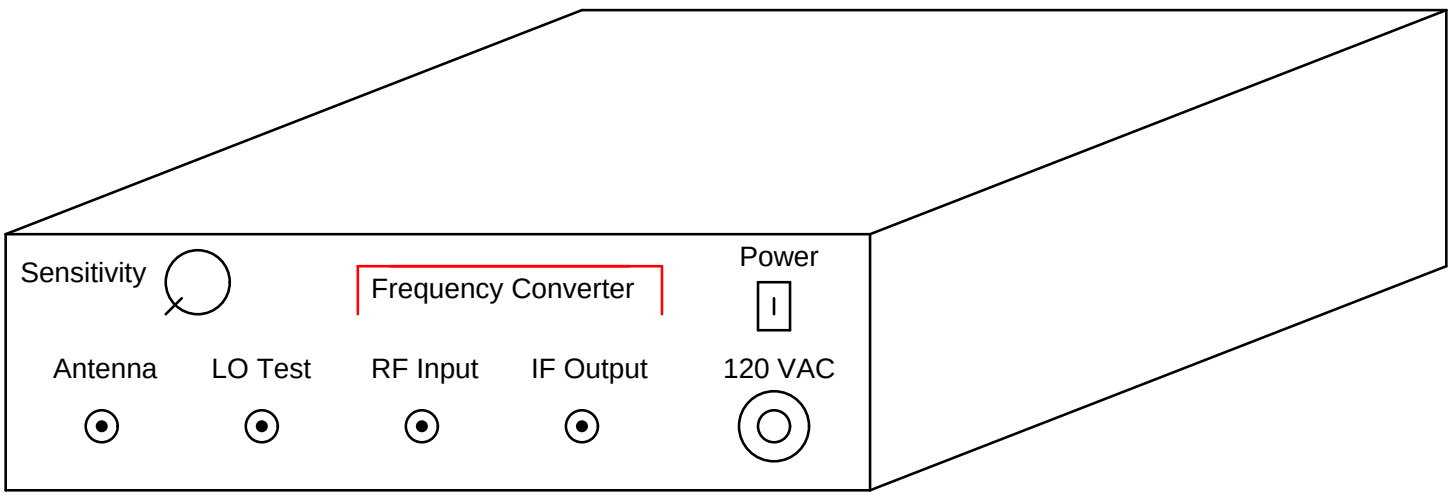

Back Panel Layout