50 Hz - 100 MHz General Purpose Wide-Band Preamp
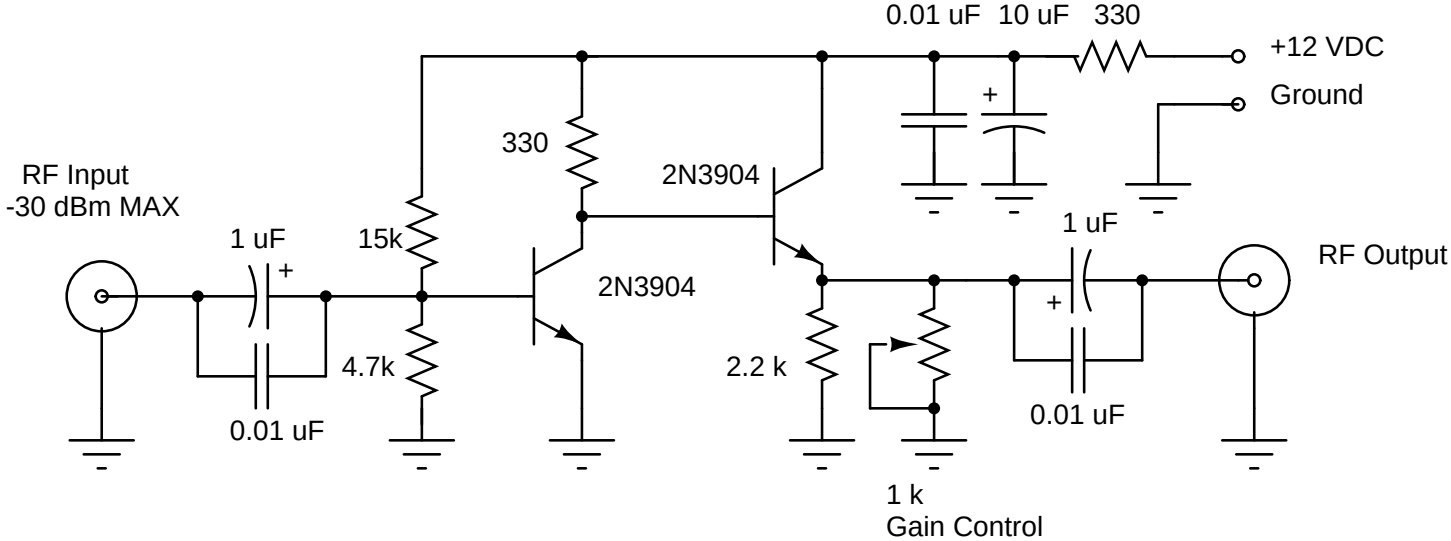
+35 dB at 100 kHz
+30 dB at 10 MHz
+17 dB at 100 MHz
Noise <10 uV across 50 ohms