1 Watt Amplifier For PRISM2 Based Access Points

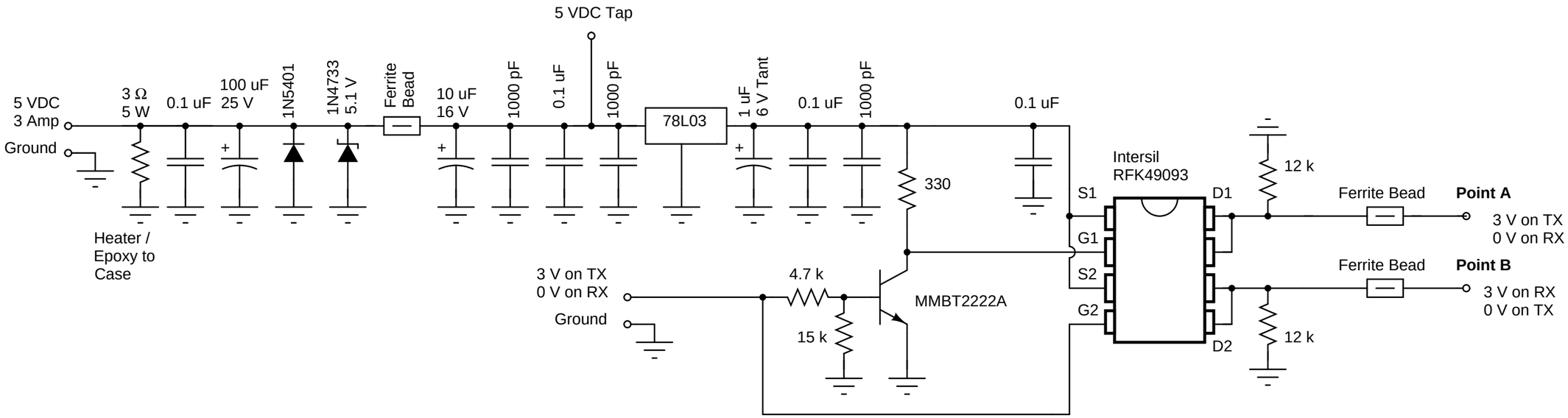

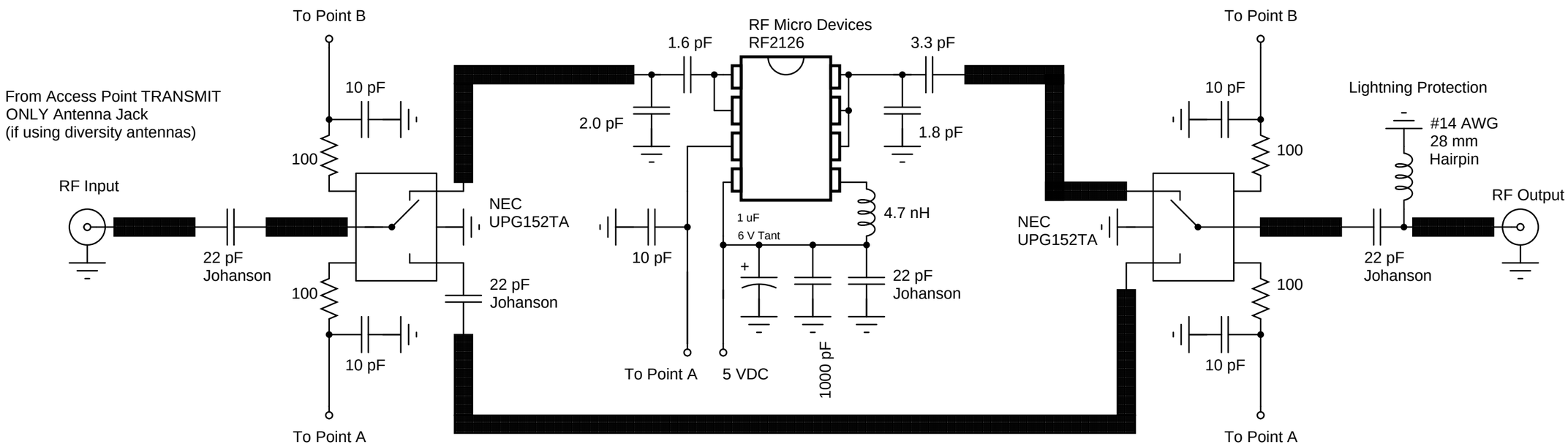

GBPPR 1 Watt Access Point Amplifier		
Rev 1.0	08/26/2001	Sheet 1 of 1
Experimental Design		www.gbppr.org

Notes

50 ohm striplines

Ferrite beads are SMT, 31 ohm @ 100 MHz type

UPG152TA is available from Mouser

The heater resistor is optional

All parts are surface mount