Bi-Directional 2.4 GHz Amplifier

- 1.3 Watts RF power output
- 16 dB receive gain with bandpass filter

16 - 22 are GHz bypass

1000 pF are MHz bypass

0.1 uF are kHz bypass

RF connectors are SMA or N

Capacitors are ceramic SMT unless noted otherwise

Use Teflon PCB material or other low dielectric material (if possible)

All resistors are chip style carbon film, 5%

0603 or 0402 in RF or RF bypass sections
0805 for other

Inductors on the PIN bias lines should have a self resonant frequency higher than 2.5 GHz

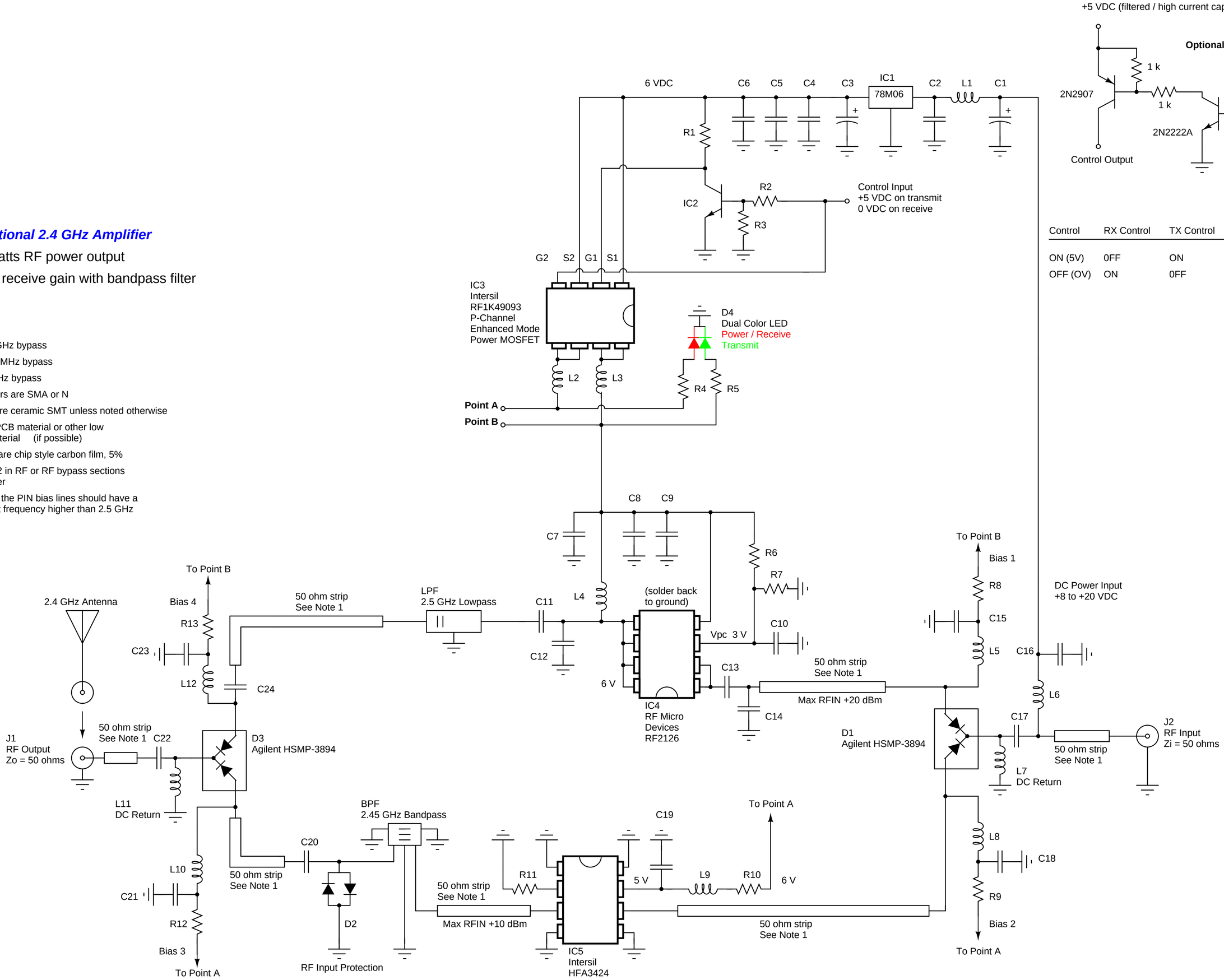

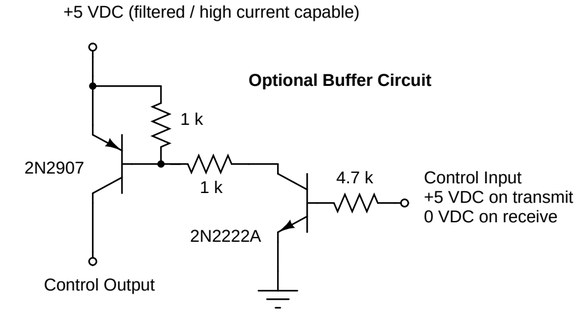

Control	RX Control	TX Control	Bias 1	Bias 2	Bias 3	Bias 4
ON (5V)	0FF	ON	ON	OFF	OFF	ON
OFF (OV)	ON	0FF	0FF	ON	ON	0FF

Note 1 : 1.4 mm wide trace on ε_r = 4.34, 0.79 mm thick, double sided FR-4 copper clad board

GBPPR 2.4 GHz bi-directional amplfiier		
Rev 1.7	06/28/2000	Sheet 1 of 1
		www.gbppr.org