Bi-Directional 2.4 GHz Amplifier

- 1.3 Watts RF power output
- 16 dB receive gain with bandpass filter

16 - 22 are GHz bypass

1000 pF are MHz bypass

0.1 uF are kHz bypass

RF connectors are SMA or N

Capacitors are ceramic SMT unless noted otherwise

Use Teflon PCB material or other low dielectric material (if possible)

All resistors are chip style carbon film, 5%

0603 or 0402 in RF or RF bypass sections
0805 for other

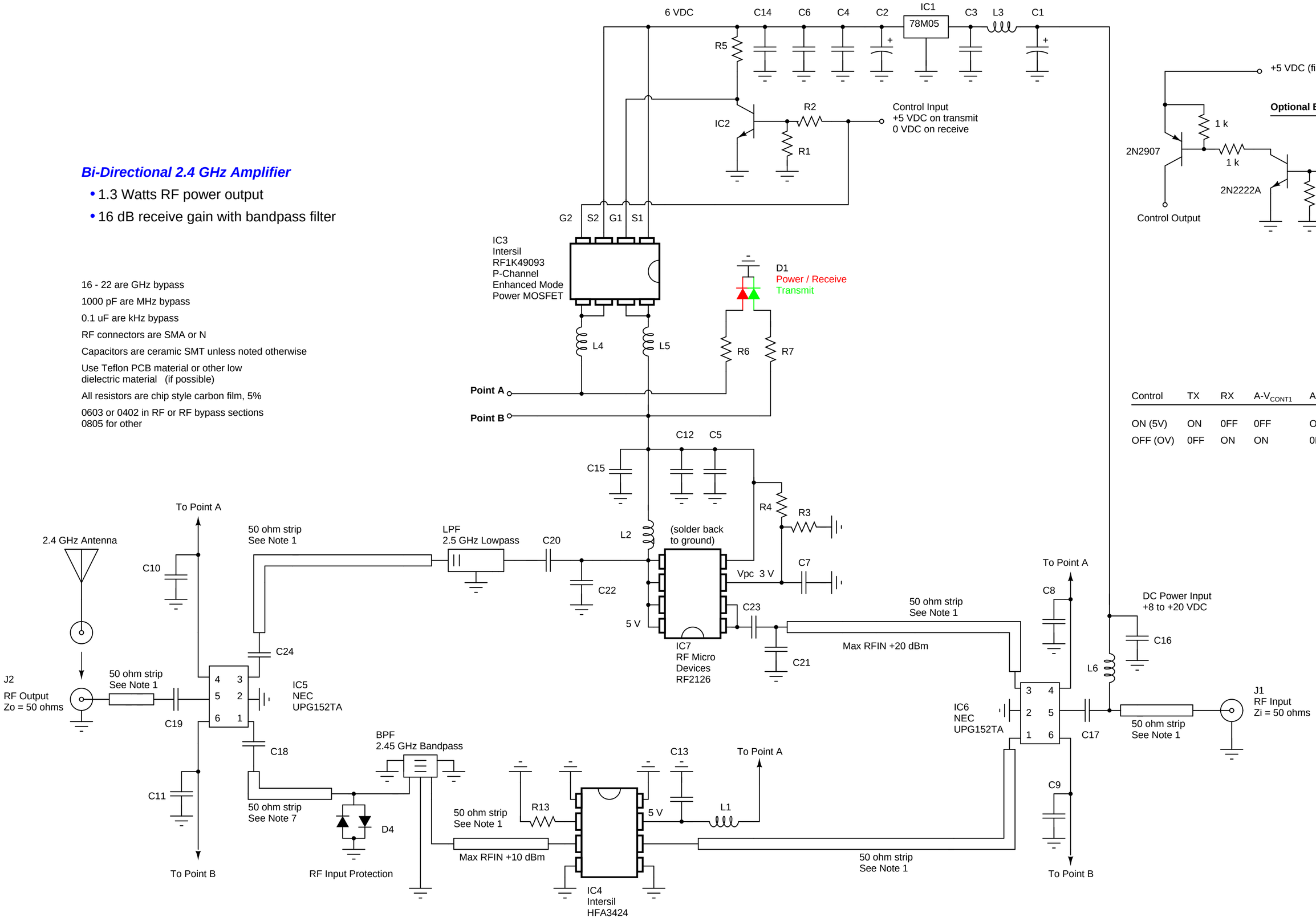

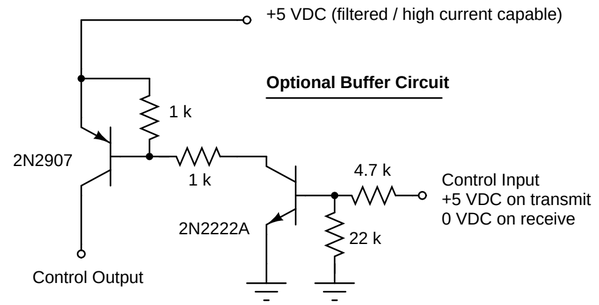

Control	TX	RX	A-V_{CONT1}	A-V_{CONT2}	B-V_{CONT2}	B-V_{CONT1}
ON (5V)	ON	0FF	0FF	ON	ON	0FF
OFF (OV)	0FF	ON	ON	0FF	0FF	ON

Note 1 : 1.4 mm wide on ε_r = 4.34, 0.79 mm thick, double sided FR-4 copper clad board

GBPPR (New) 2.4 GHz bi-directional amplifier		
Rev 1.6	08/27/2000	Sheet 1 of 1
Experimental Design		www.gbppr.org