Bi-Directional 2.4 GHz Amplifier

- 1 Watt RF Power Output
- 16 dB Receive Gain with Bandpass Filter

16 - 22 are GHz bypass
1000 pF are MHz bypass
0.1 uF are kHz bypass
RF connectors are SMA or N
Capacitors are ceramic SMT unless noted otherwise
Use Teflon PCB material or other low dielectric material (if possible)
All resistors are chip style carbon film, 5%
0603 or 0402 in RF or RF bypass sections
0805 for other

50 ohm striplines

1.4 mm wide on ε_r = 4.34, 0.79 mm thick, double sided FR-4 copper clad board

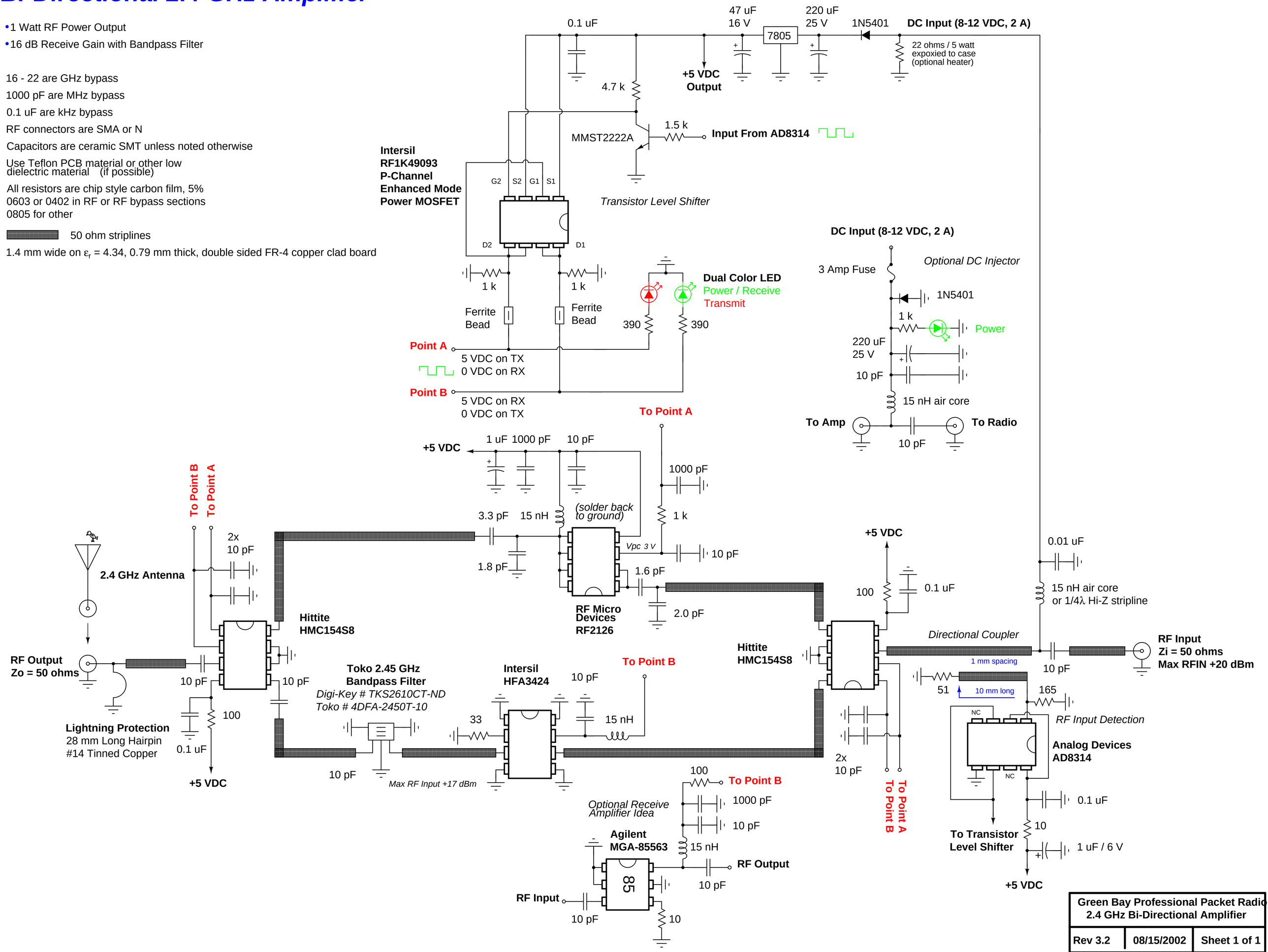

Green Bay Professional Packet Radio 2.4 GHz Bi-Directional Amplifier		
Rev 3.2	08/15/2002	Sheet 1 of 1
Experimental Design	www.gbppr.org	