100 - 900 MHz Antenna Analyzer Internal Layout

Not To Scale

AC transformer should be small and shielded

Power switch should include fuse

BNC jack and meter connections should be done using small coaxial cable

Return loss bridge should be in a well shielded enclosure

LO amplifiers should be in a well shielded enclosure

Return loss bridge should be as close the antenna jack as possible

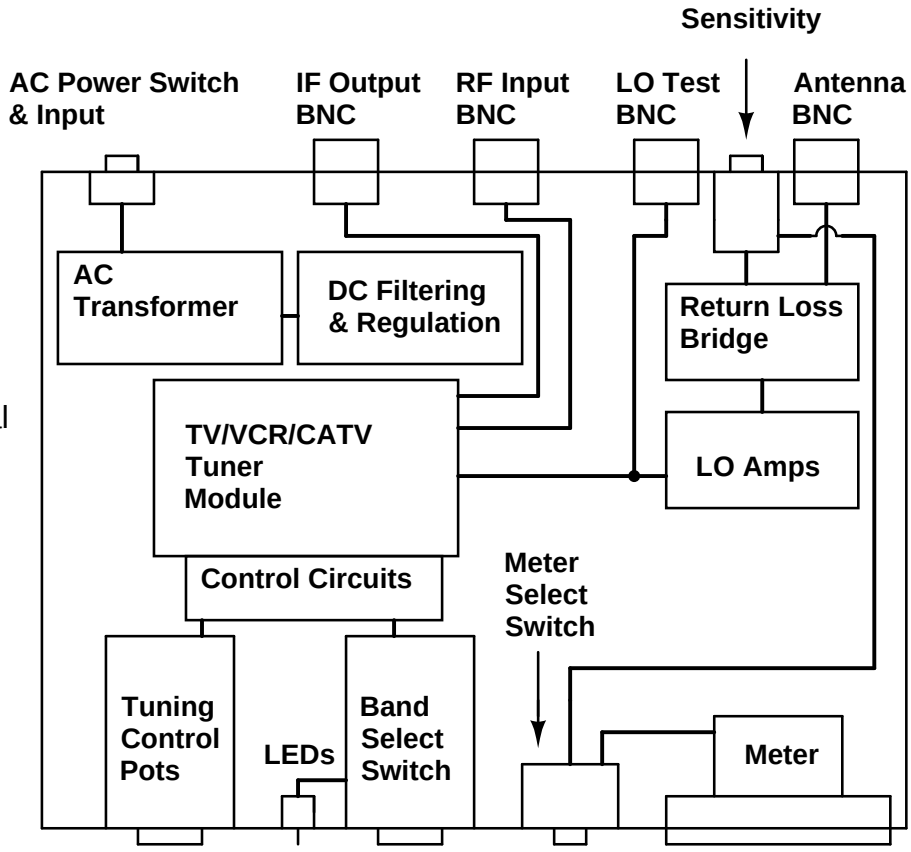

Interconnects

Front Panel