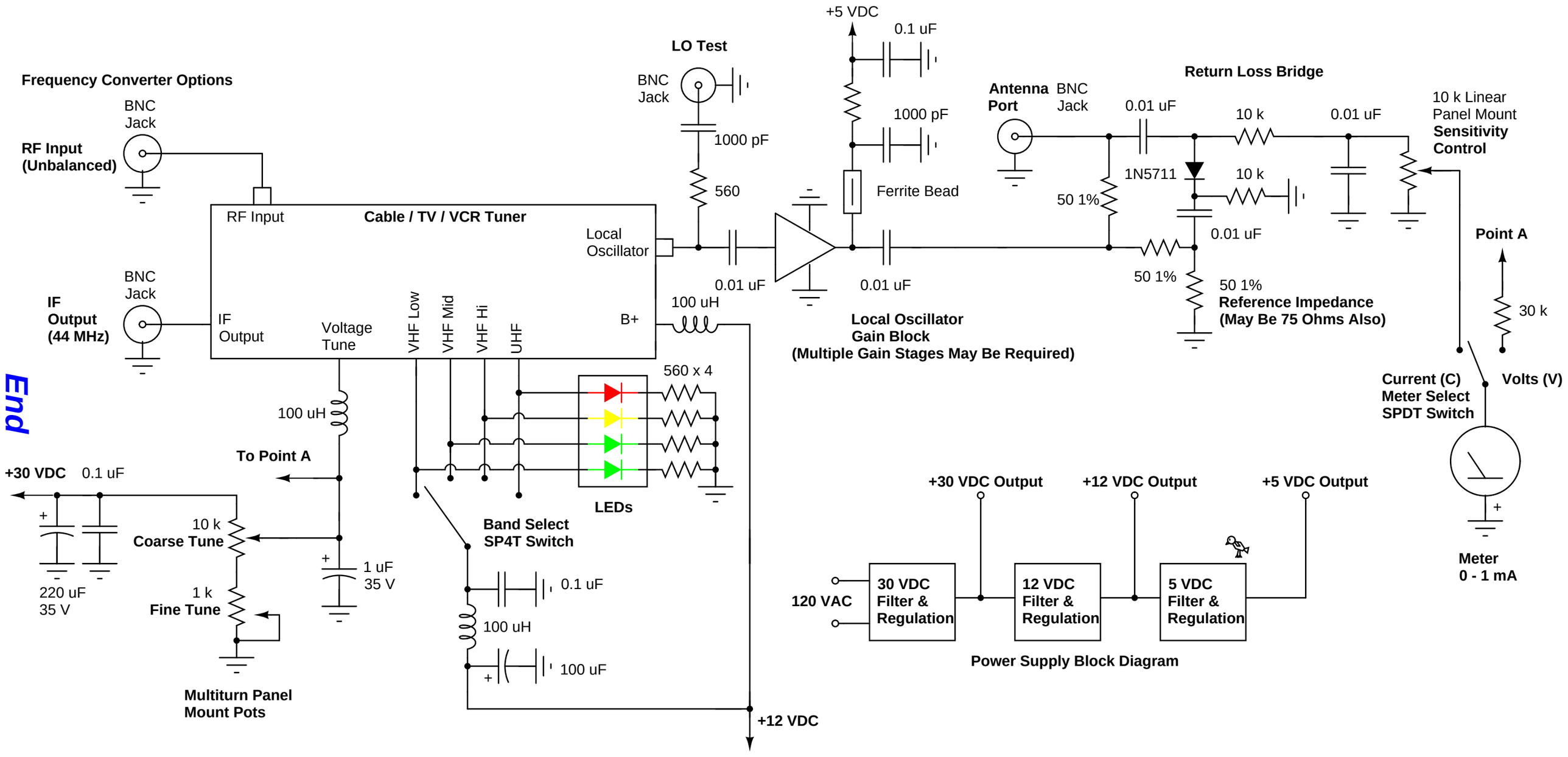100 - 900 MHz Antenna Analyzer Application Schematic & Block Diagram