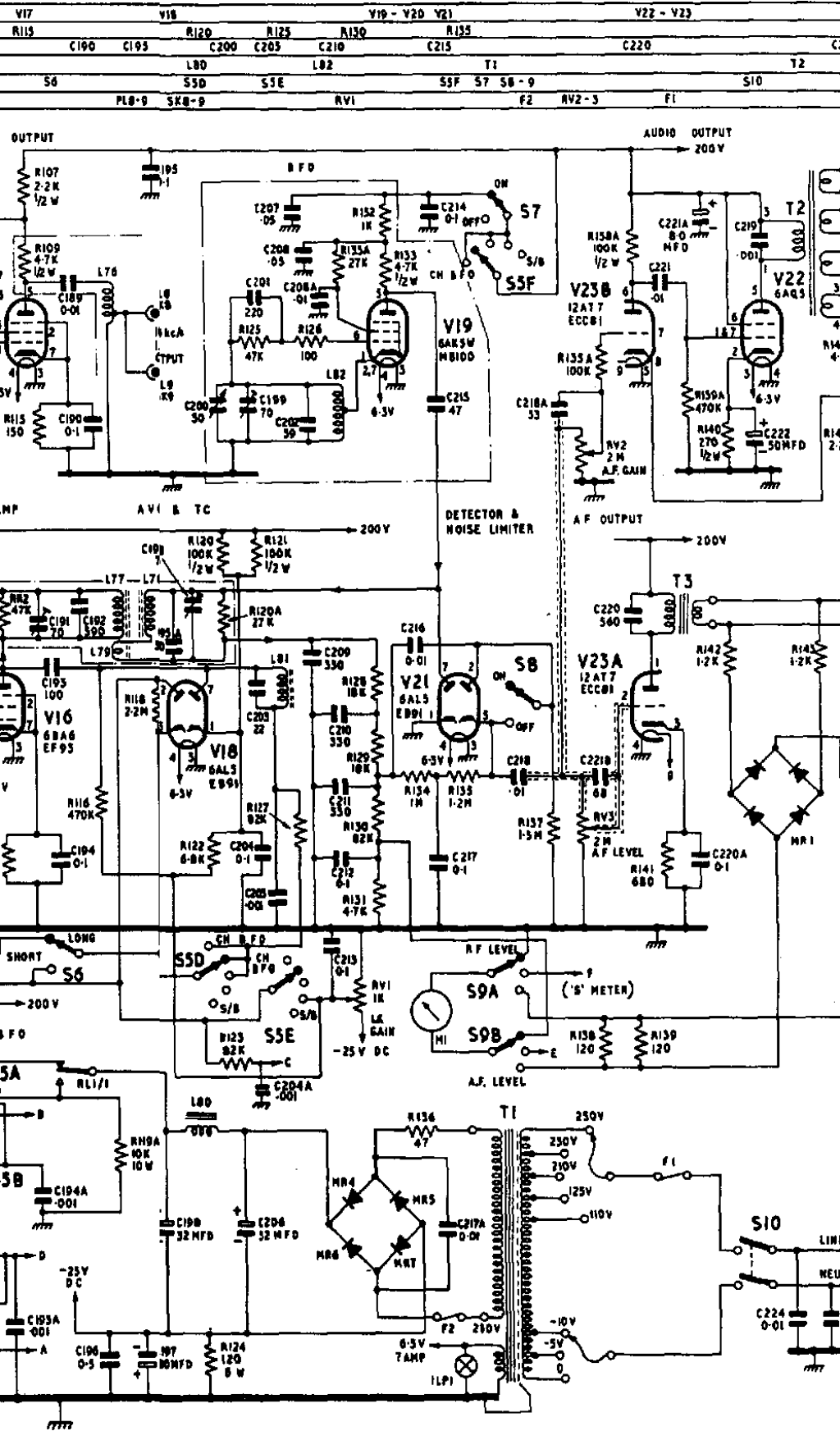

V17
V18
V19 - V20 V21
V22 - V23
R115
R120
R125
R130
R135
C190
C195
C200
C205
C210
C215
C220
L80
L82
T1
T2
S6
S5D
S5E
S5F S7 S8 - 9
S10
PL8-9 SK8-9
RV1
F2
RV2-3
F1
OUTPUT
AUDIO OUTPUT
200V
BFO
R107 2·2K 1/2 W
R109 4·7K 1/2 W
C189 0·01
L76
L8 K8
L9 K9
R115 150
C190 0·1
C207 ·05
C208 ·05
R152 1K
R135A 27K
R133 4·7K 1/2 W
C214 0·1
ON
OFF
S7
S/B
S5F
CH BFO
C201 220
C208A ·01
R125 47K
R126 100
V19 6AK5W MB100
L82
C200 50
C199 70
C202 59
6·3V
C215 47
R158A 100K 1/2 W
C221A 8·0 MFD
C219 ·001
T2
V23B 12AT7 ECC81
C221 ·01
V22 6AQ5
R135A 100K
R159A 470K
R140 270 1/2 W
C222 50MFD
C218A 33
RV2 2M A.F. GAIN
AVC & TC
DETECTOR & NOISE LIMITER
AF OUTPUT
R120 100K 1/2 W
R121 100K 1/2 W
L77
L71
L79
R120A 27K
C191 70
C192 590
C193 100
V16 6BA6 EF95
R118 2·2M
V18 6AL5 EB91
L81
C203 22
C209 330
C216 0·01
V21 6AL5 EB91
S8
R128 18K
C210 330
R129 18K
C211 330
R130 82K
C212 0·1
R131 4·7K
R134 1M
R135 1·2M
C218 ·01
C221B 68
R137 1·5M
RV3 2M AF LEVEL
C220 560
T3
V23A 12AT7 ECC81
R142 1·2K
R143 1·2K
MR1
R116 470K
C194 0·1
R122 6·8K
C204 0·1
R127 82K
C205 ·001
C217 0·1
R141 680
C220A 0·1
LONG
SHORT
S6
S5D
CH BFO
S/B
C213 0·1
RV1 1K
LK GAIN
-25 V DC
RF LEVEL
S9A
('S' METER)
S9B
M1
R138 120
R139 120
A.F. LEVEL
R123 82K
S5E
C204A ·001
RL1/1
L80
R119A 10K 10W
C194A ·001
C198 32 MFD
C206 32 MFD
R136 47
T1
250V
210V
125V
110V
MR4
MR5
MR6
MR7
C217A 0·01
F1
S10
-25V DC
C193A ·001
C196 0·5
197 10MFD
R124 120 6 W
F2
210V
6·3V 7AMP
ILP1
-10V
-5V
0
C224 0·01