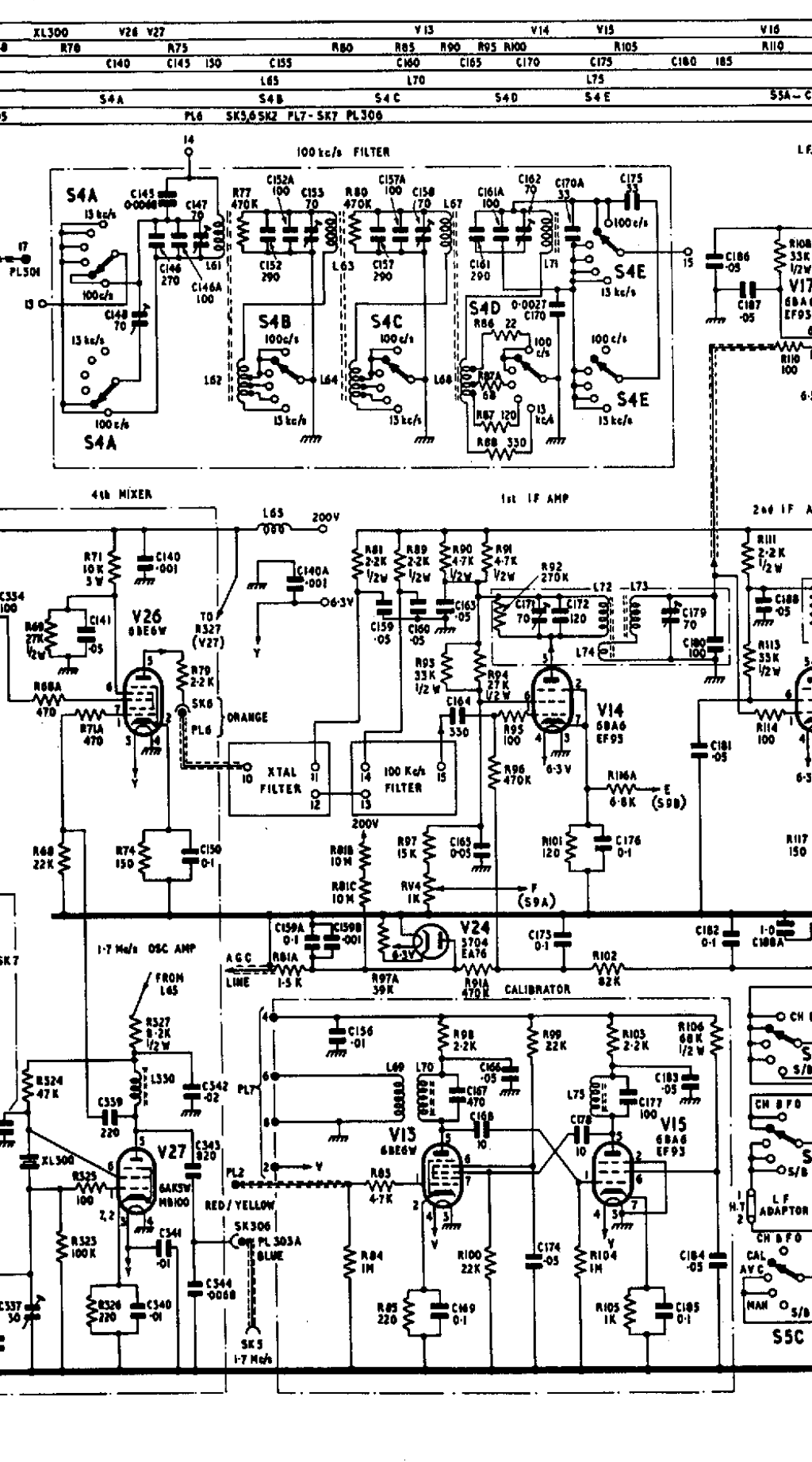

XL300
V26 V27
V13
V14
V15
V16
R70
R75
R80
R85
R90
R95 R100
R105
R110
C140
C145
C155
C160
C165
C170
C175
C180
L65
L70
L75
S4A
S4B
S4C
S4D
S4E
PL6
SK5,6 SK2 PL7 - SK7 PL306
100 kc/s FILTER
4th MIXER
1st IF AMP
2nd IF
V26
6BE6W
V14
6BA6
EF93
V24
5704
EA76
V13
6BE6W
V15
6BA6
EF93
V27
6AK5W
MB100
XTAL FILTER
100 Kc/s FILTER
ORANGE
TO R327 (V27)
1·7 Mc/s OSC AMP
AGC LINE
CALIBRATOR
FROM L65
RED / YELLOW
SK306
PL 303A
BLUE
SK5
1·7 Mc/s
LF ADAPTOR
CH B F O
CAL
AVC
MAN
S5C