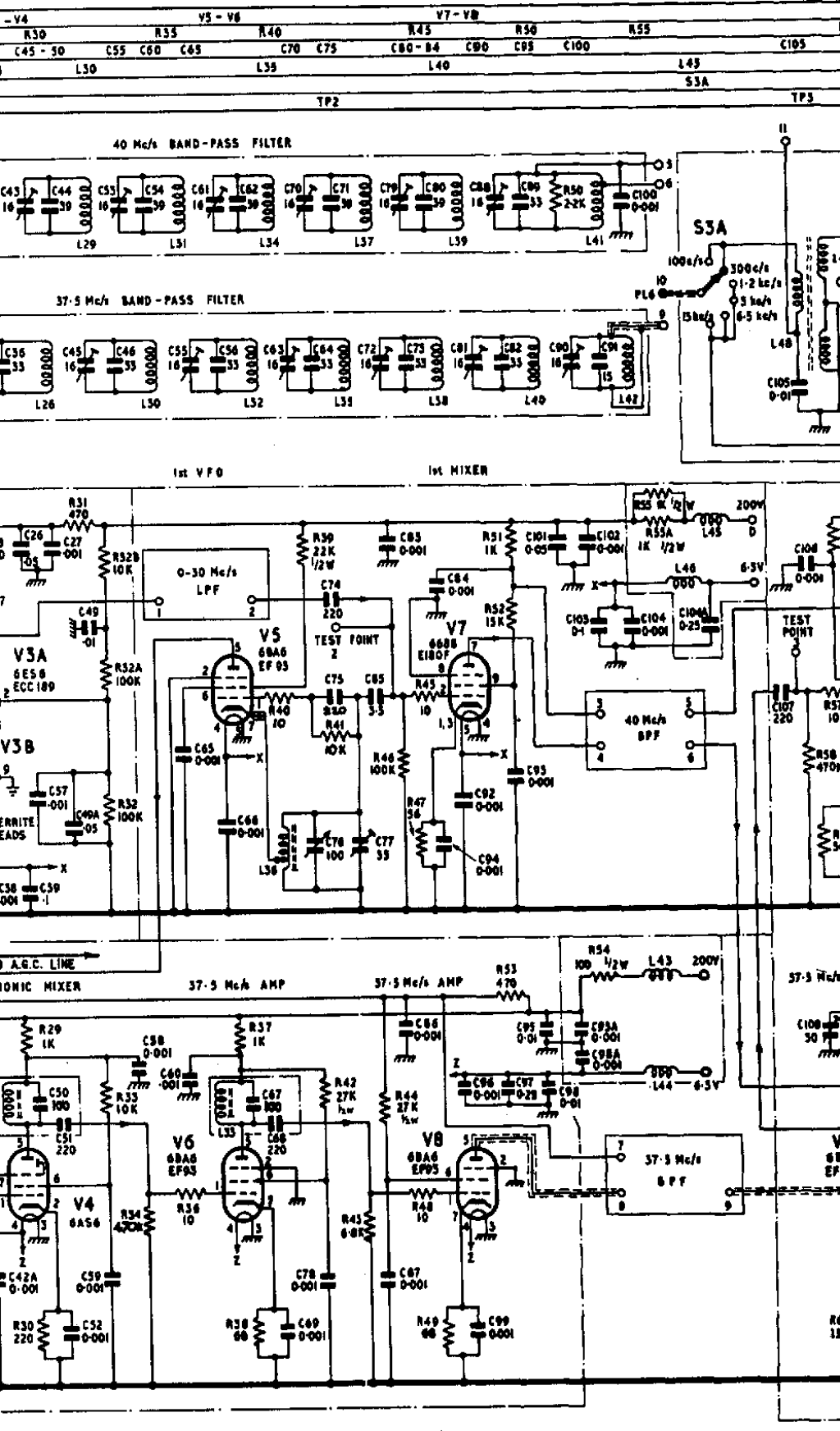

V4
V5 - V6
V7 - V8
R30
R35
R40
R45
R50
R55
C45 - 50
C55
C60
C65
C70
C75
C80 - 84
C90
C95
C100
C105
L30
L35
L40
L45
S3A
TP2
TP3
40 Mc/s BAND-PASS FILTER
37·5 Mc/s BAND-PASS FILTER
S3A
100c/s
300c/s
1·2 kc/s
5 kc/s
6·5 kc/s
15kc/s
PL6
1st VFO
1st MIXER
0-30 Mc/s LPF
V5 6BA6 EF93
V7 6688 E180F
V3A 6ES6 ECC189
V3B
TEST POINT 2
TEST POINT 3
40 Mc/s BPF
200V
6·5V
A.G.C. LINE
37·5 Mc/s AMP
37·5 Mc/s AMP
V6 6BA6 EF93
V8 6BA6 EF93
V4 6AS6
37·5 Mc/s BPF