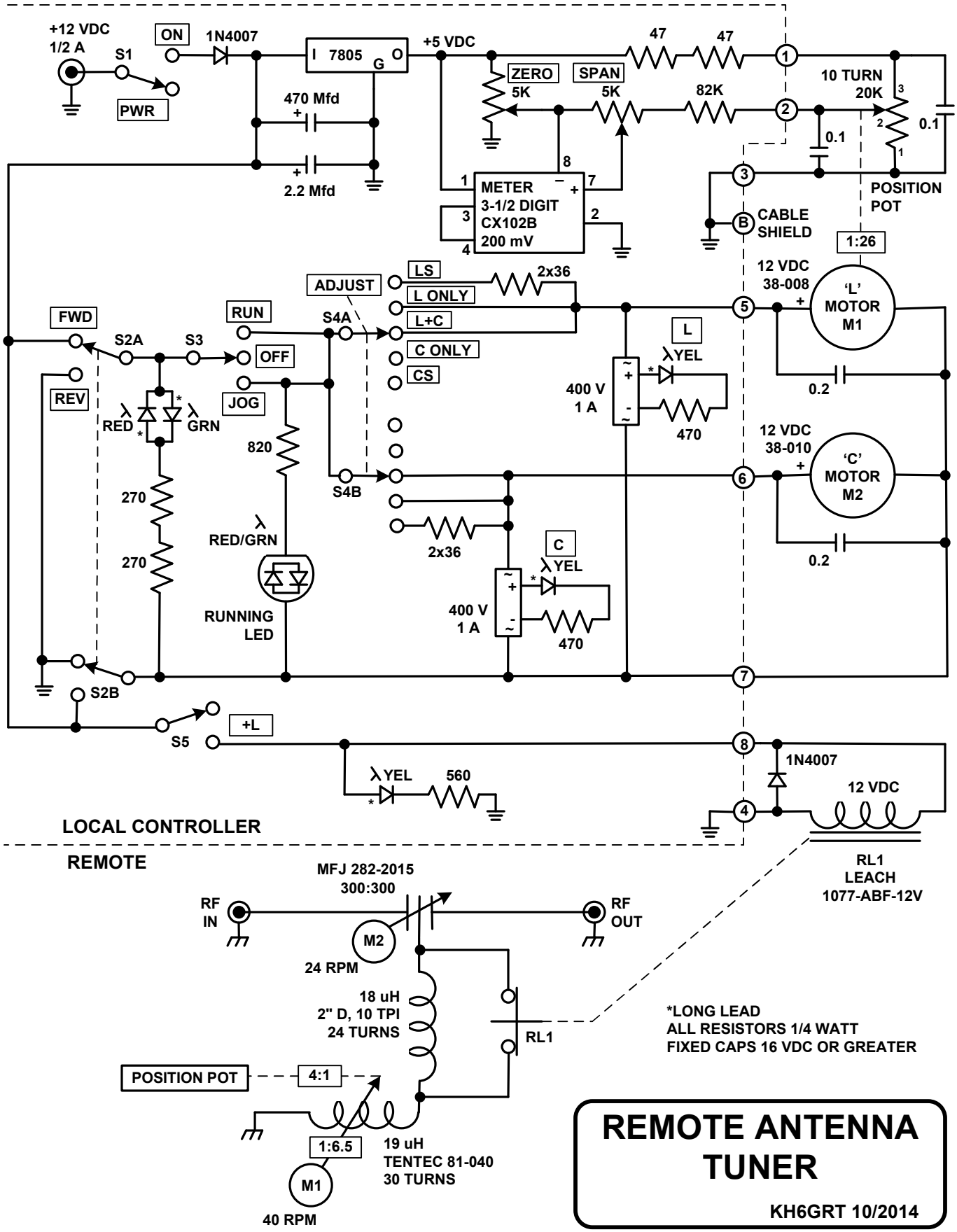

REMOTE ANTENNA TUNER

KH6GRT 10/2014