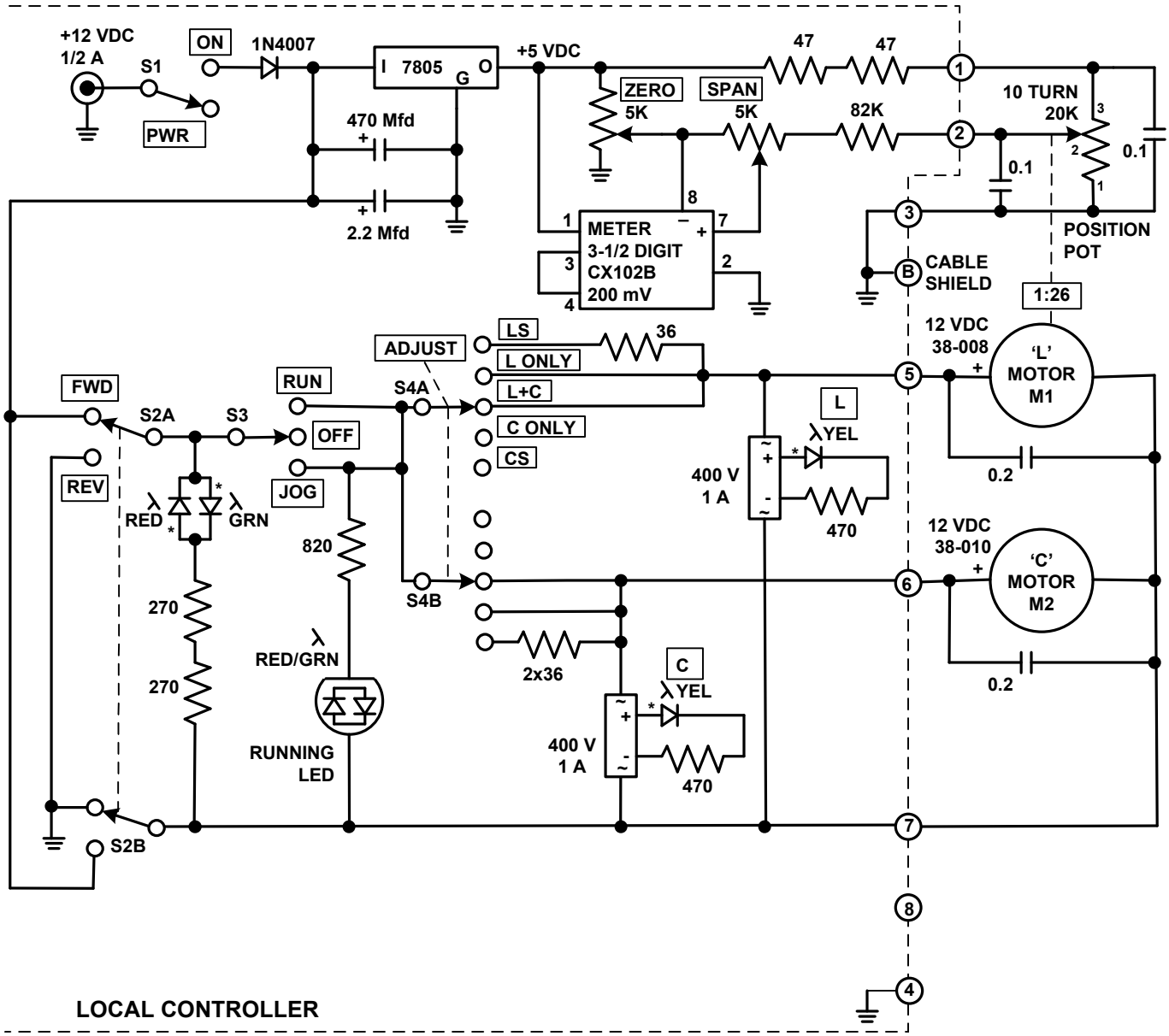

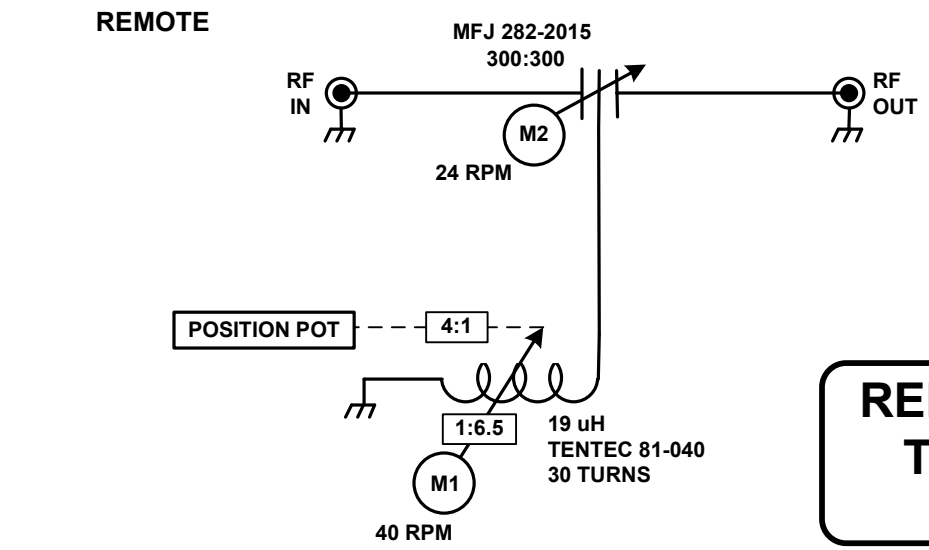

*LONG LEAD
ALL RESISTORS 1/4 WATT
FIXED CAPS 16 VDC OR GREATER

REMOTE ANTENNA TUNER – REV A

KH6GRT 10/2014

REV A: ELIMINATED FIXED INDUCTOR