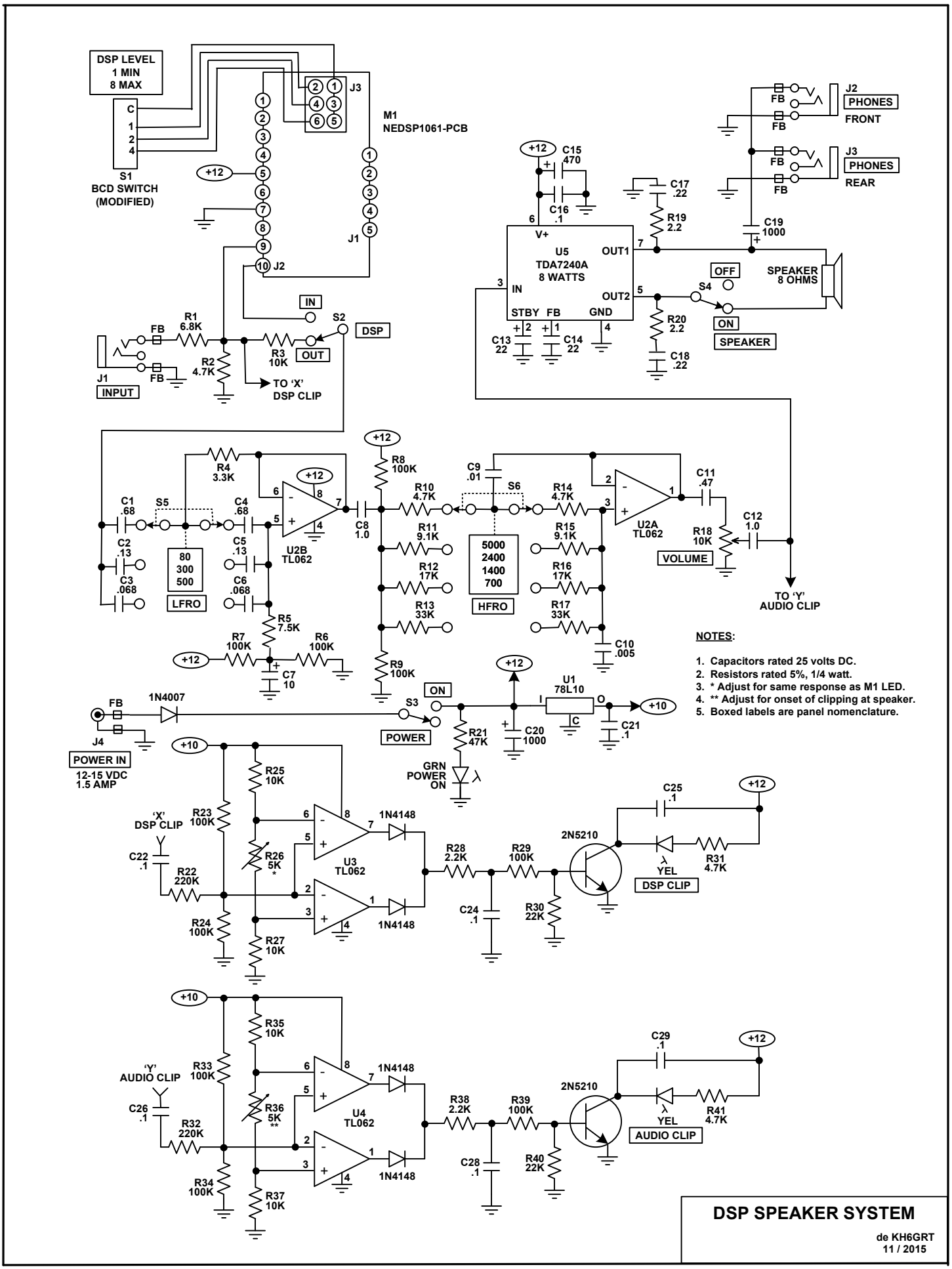
DSP LEVEL
1 MIN
8 MAX
S1
BCD SWITCH
(MODIFIED)
J3
M1
NEDSP1061-PCB
J1
J2
+12
IN
S2
DSP
OUT
R1
6.8K
FB
R2
4.7K
R3
10K
J1
INPUT
TO 'X'
DSP CLIP
J2
PHONES
FRONT
J3
PHONES
REAR
C15
.470
C16
.1
C17
.22
R19
2.2
C19
1000
U5
TDA7240A
8 WATTS
V+
OUT1
IN
OUT2
STBY
FB
GND
OFF
S4
ON
SPEAKER
SPEAKER
8 OHMS
R20
2.2
C18
.22
C13
22
C14
22
R4
3.3K
C1
.68
S5
C4
.68
C2
.13
C3
.068
80
300
500
LFRO
C5
.13
C6
.068
U2B
TL062
R5
7.5K
R7
100K
R6
100K
C7
10
C8
1.0
R8
100K
R10
4.7K
R11
9.1K
R12
17K
R13
33K
R9
100K
C9
.01
S6
5000
2400
1400
700
HFRO
R14
4.7K
R15
9.1K
R16
17K
R17
33K
C10
.005
U2A
TL062
C11
.47
R18
10K
C12
1.0
VOLUME
TO 'Y'
AUDIO CLIP
NOTES:
1. Capacitors rated 25 volts DC.
2. Resistors rated 5%, 1/4 watt.
3. * Adjust for same response as M1 LED.
4. ** Adjust for onset of clipping at speaker.
5. Boxed labels are panel nomenclature.
1N4007
J4
POWER IN
12-15 VDC
1.5 AMP
S3
ON
POWER
R21
47K
GRN
POWER
ON
C20
1000
U1
78L10
C21
.1
+10
R25
10K
'X'
DSP CLIP
R23
100K
C22
.1
R22
220K
R26
5K
*
R24
100K
R27
10K
U3
TL062
1N4148
R28
2.2K
R29
100K
C24
.1
R30
22K
2N5210
C25
.1
YEL
R31
4.7K
DSP CLIP
R35
10K
'Y'
AUDIO CLIP
R33
100K
C26
.1
R32
220K
R36
5K
**
R34
100K
R37
10K
U4
TL062
R38
2.2K
R39
100K
C28
.1
R40
22K
C29
.1
R41
4.7K
AUDIO CLIP
DSP SPEAKER SYSTEM
de KH6GRT
11 / 2015