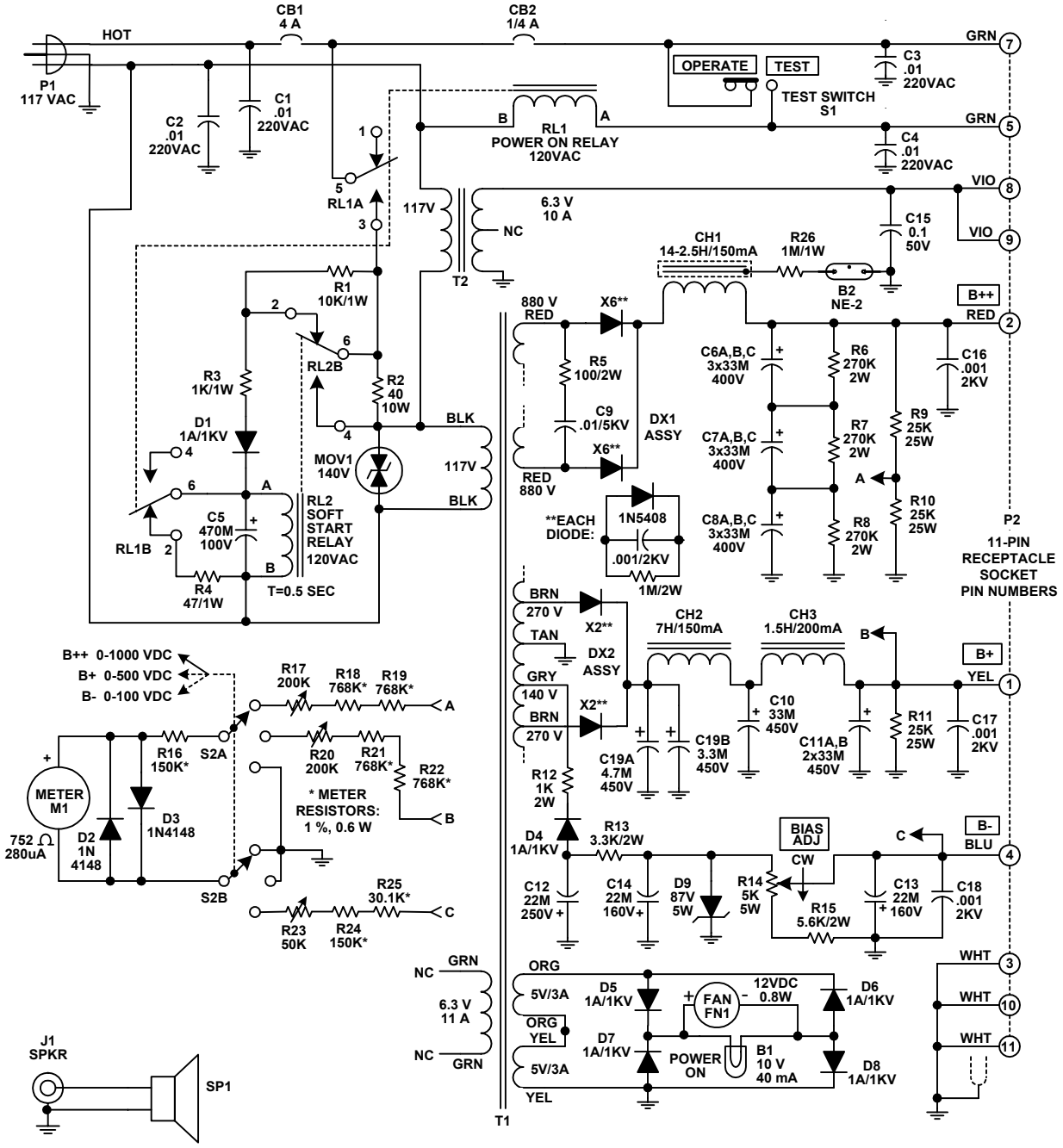

TYPE 516 AC POWER SUPPLY

COMPATIBLE WITH COLLINS 32S AND KWM-2 SERIES TRANSMITTERS.

OUTPUTS:
- **B++ 800 VOLTS, NOMINAL**
- **B+ 270 VOLTS, NOMINAL**
- **B- -55 TO -80 VOLTS, ADJUSTABLE, NOMINAL**
- **FILAMENT 6.3 VOLTS AC**

KH6GRT
1/2004

INCLUDES POWER-ON RELAY, SOFT START RELAY, TEST SWITCH, FULL METERING, STABILIZED BIAS SUPPLY, TEFLON WIRING, TRANSIENT PROTECTION, AND SPEAKER FOR RECEIVER.

LAST USED:
C19,R26,CH3,D9,SP1,MOV1, B2,FN1,M1,S2,P2,RL2,CB2, J1,T2,DX2