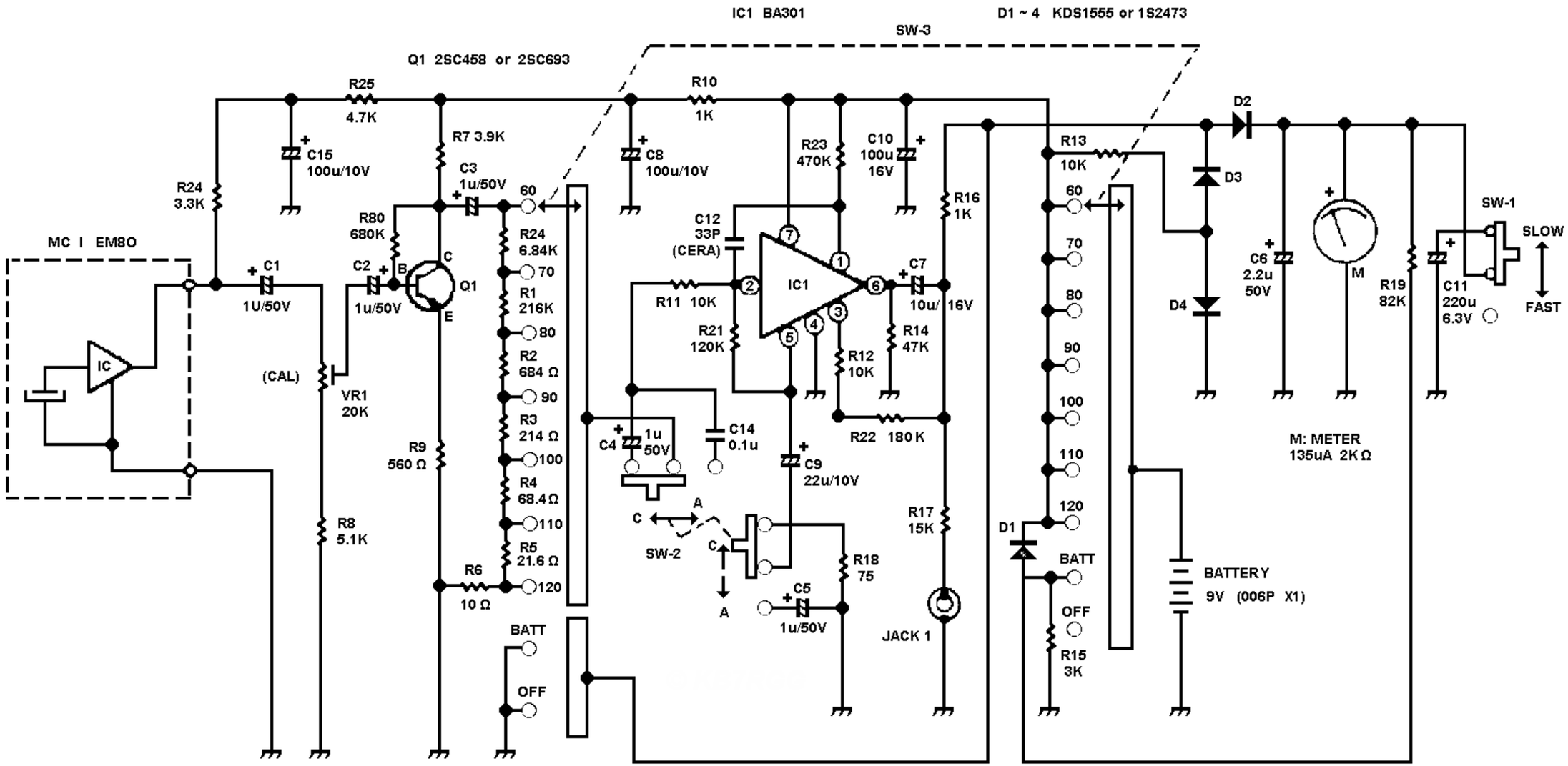

NOTES:
1. ALL RESISTOR VALUES ARE GIVEN IN OHMS.
2. ALL CAPACITOR VALUES ARE GIVEN IN FARAD.