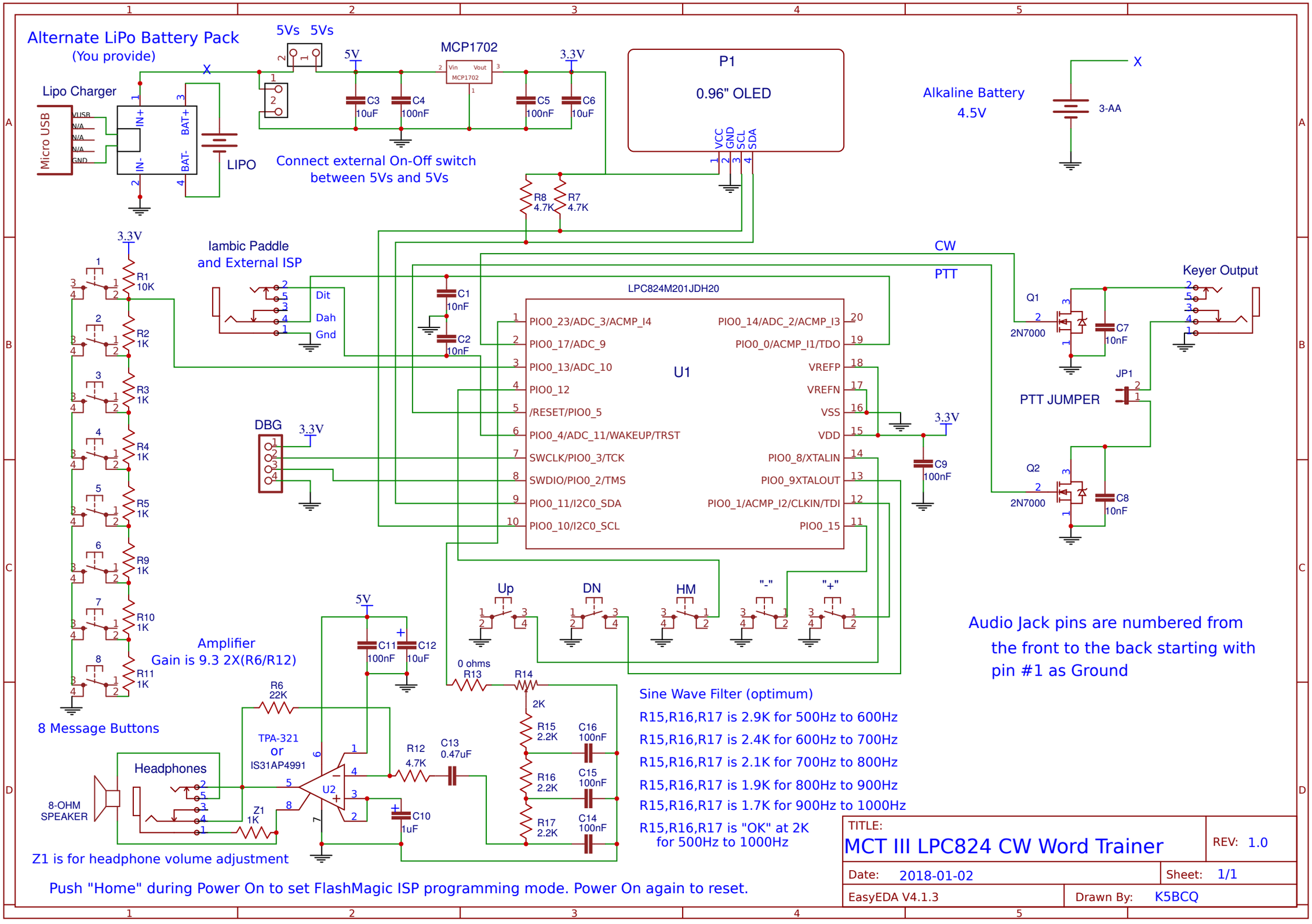
Alternate LiPo Battery Pack
(You provide)
Lipo Charger
Micro USB
VUSB
N/A
N/A
N/A
GND
IN+
IN-
BAT+
BAT-
LIPO
X
5Vs 5Vs
5V
MCP1702
Vin
Vout
3.3V
C3
10uF
C4
100nF
C5
100nF
C6
10uF
Connect external On-Off switch
between 5Vs and 5Vs
P1
0.96" OLED
VCC
GND
SCL
SDA
R8
4.7K
R7
4.7K
Alkaline Battery
4.5V
3-AA
Iambic Paddle
and External ISP
Dit
Dah
Gnd
C1
10nF
C2
10nF
LPC824M201JDH20
U1
PIO0_23/ADC_3/ACMP_I4
PIO0_17/ADC_9
PIO0_13/ADC_10
PIO0_12
/RESET/PIO0_5
PIO0_4/ADC_11/WAKEUP/TRST
SWCLK/PIO0_3/TCK
SWDIO/PIO0_2/TMS
PIO0_11/I2C0_SDA
PIO0_10/I2C0_SCL
PIO0_14/ADC_2/ACMP_I3
PIO0_0/ACMP_I1/TDO
VREFP
VREFN
VSS
VDD
PIO0_8/XTALIN
PIO0_9XTALOUT
PIO0_1/ACMP_I2/CLKIN/TDI
PIO0_15
CW
PTT
Keyer Output
Q1
2N7000
C7
10nF
JP1
PTT JUMPER
Q2
2N7000
C8
10nF
C9
100nF
DBG
R1
10K
R2
1K
R3
1K
R4
1K
R5
1K
R9
1K
R10
1K
R11
1K
8 Message Buttons
Up
DN
HM
"-"
"+"
Amplifier
Gain is 9.3 2X(R6/R12)
C11
100nF
C12
10uF
R6
22K
TPA-321
or
IS31AP4991
U2
R12
4.7K
C13
0.47uF
C10
1uF
Headphones
8-OHM
SPEAKER
Z1
1K
Z1 is for headphone volume adjustment
0 ohms
R13
R14
2K
R15
2.2K
R16
2.2K
R17
2.2K
C16
100nF
C15
100nF
C14
100nF
Sine Wave Filter (optimum)
R15,R16,R17 is 2.9K for 500Hz to 600Hz
R15,R16,R17 is 2.4K for 600Hz to 700Hz
R15,R16,R17 is 2.1K for 700Hz to 800Hz
R15,R16,R17 is 1.9K for 800Hz to 900Hz
R15,R16,R17 is 1.7K for 900Hz to 1000Hz
R15,R16,R17 is "OK" at 2K
for 500Hz to 1000Hz
Audio Jack pins are numbered from
the front to the back starting with
pin #1 as Ground
Push "Home" during Power On to set FlashMagic ISP programming mode. Power On again to reset.
TITLE:
MCT III LPC824 CW Word Trainer
REV: 1.0
Date: 2018-01-02
Sheet: 1/1
EasyEDA V4.1.3
Drawn By: K5BCQ