HEWLETT® PACKARD

Biasing Three-Terminal Devices for Test

Application Note 376-1

A precise solution for component evaluation and sub-assembly testing...

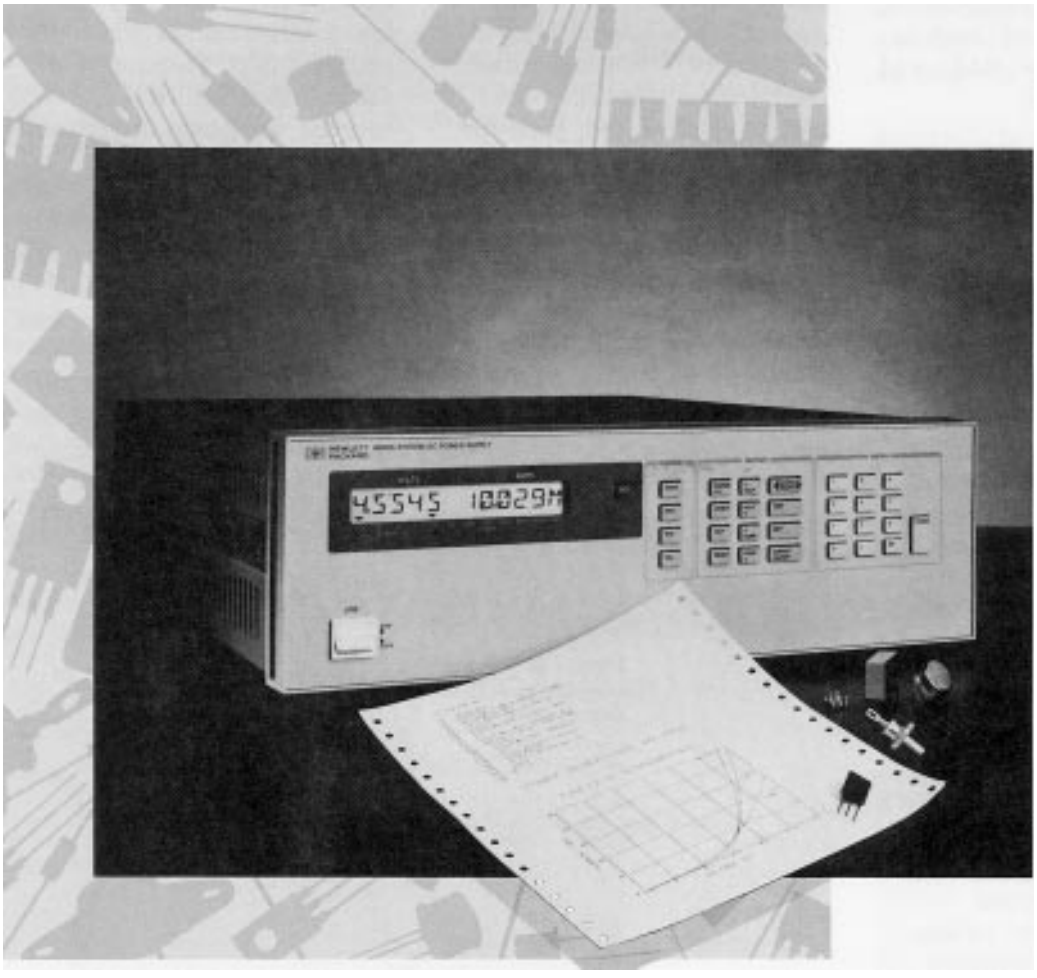

Introduction

Measuring the operating characteristics of a wide variety of three-terminal devices can be accomplished with a single test configuration eliminating the need to rewire or change instrumentation. This reduction in set-up time is especially valuable in environments where many different types of components need to be evaluated, such as failure analysis labs, R&D, and incoming inspection.

The types of tests which can be accomplished using the biasing methods discussed below include, but are not limited to; measuring ac characteristics and dc parameters and fault testing. Typical components which may be evaluated in this manner include; pnp and npn bipolar transistors, enhancement and depletion mode FETs, ICs, and SCRs. Two-terminal devices, such as diodes, can also be tested by simply not using the third test node (node #2).

It is assumed that the dc sources (or multiple output source) used for all of the configurations described have a minimum set of features. This includes computer control of the output and internal monitoring of output voltage and current. If the supplies cannot be controlled by computer, then adjustments must be made manually. If the power supplies cannot meter their output voltage and current, then appropriate metering instruments must be added to the configurations.

Biasing Methods

Commonly, a three-terminal device test requires that two parameters (voltage or current) be defined as fixed, and applied to the device. The other parameters are then measured. There are many methods of accomplishing this. As each method is described, the benefits and drawbacks will be enumerated, then the following method will address the drawbacks of the previous one.

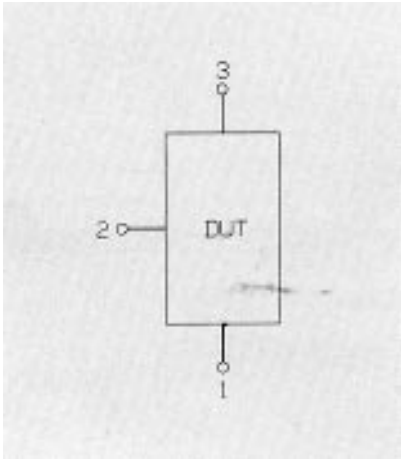

Figure 1. Generalized Three-terminal Device

Figure 1 shows a generalized three-terminal device. On this device, terminal 3 is a bias input and terminal 2 is a control input. Terminal 1 is the common return for both dc sources as shown in Figure 2.

In the case of a bipolar transistor connected in the common emitter configuration, terminal 3 is the collector, terminal 1 is the emitter, and terminal 2 is the base. The control variable could either be the current into pin 2, or the voltage from pin 1 to pin 2. If beta is of interest, it would be simplest to control current, and if Gm is of interest, then the choice would be voltage control. AC ground could be any of the three terminals, or none of them.

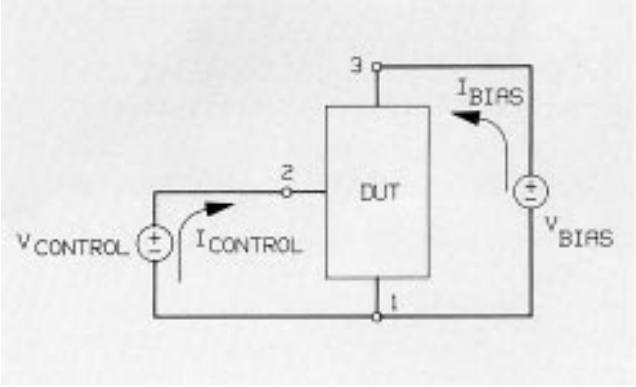

Figure 2. Biased Generalized Three-terminal Device

The Simplest Biasing Method

Continuing with the bipolar transistor example, the device to be tested is an RF power transistor which is not mounted on a heat sink. Hfe (dc gain) is to be measured at different values of 1_c at a fixed V_{ce}. The biasing method chosen is shown in Figure 3.

The voltage source V_{ce} is set for the specified level, and the current source 1_b is adjusted until 1_c reaches its specified value.

At first, this simple circuit seems adequate. All dc values (V_{ce}, 1_c, 1_b, V_{be}) can quickly be read by the metering circuits internal to the power supplies. All dc parameters (Beta, Gm, leakages) are easily calculated from the measured values. It does, however, have two drawbacks. First, the control of 1_c by adjusting 1_b requires iteration by the computer. In order to keep the collector current at the desired value, continuous measurements must be made, the results transmitted to the controller, new values calculated (based on some algorithm), and then finally the source 1_b must be adjusted. This ties up the controller leaving less time to do other measurements. The second drawback of this method is the possibility that the controller will not be able to act quickly enough to avoid potentially destructive thermal runaway.

Clearly, it is desirable to develop a method of biasing which does not require controller intervention.

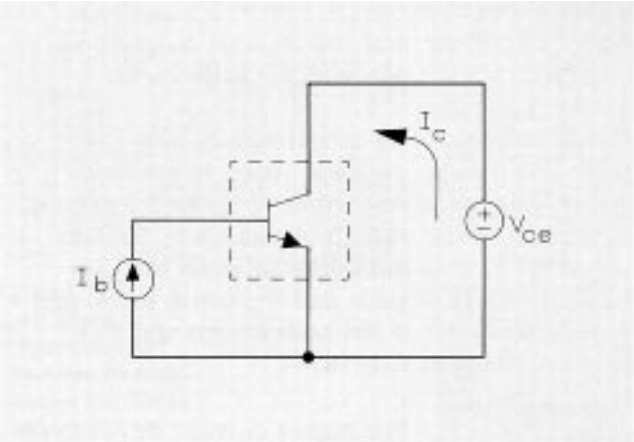

Figure 3. The Simplest Biasing Method

The Self-Controlling Biasing Method

The circuit in Figure 4 does not require controller intervention to keep the biases at the desired levels, so iterations by the computer are no longer a problem.

Source 1_e is programmed as a current source. Source V_c is almost equal to Vce ($V_c + V_{be} = V_{ce}$). No runaway is possible with this circuit, because 1_c is no longer set indirectly with 1_b with the associated time lags that worsen the heating problem. V_{ce} will remain correctly regulated to the programmed value (within approximately 0.6 volts). This 0.6 volt offset is the major drawback of this system.

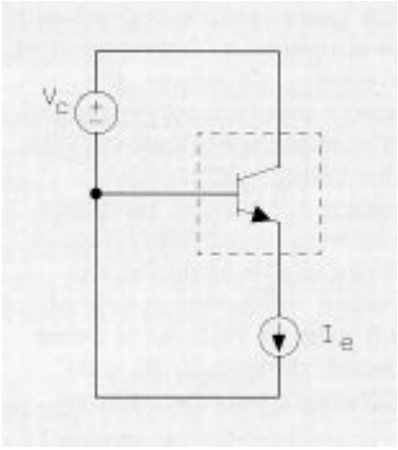

Figure 4. The Self-Biasing Controlling Method

Self-Controlling Biasing with Programmed Voltage Offset Correction

To improve upon the accuracy of V_{ce}, the power supply sense leads of source V_c can be connected as shown in Figure 5.

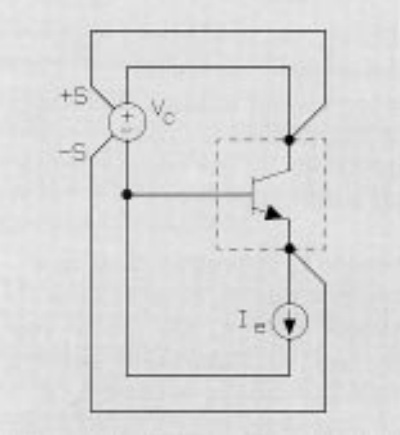

Figure 5. The Self-controlling Biasing Method with Programmed Voltage Offset Correction

Power supply V_c will adjust it's output voltage so that the voltage at the sense leads (V_{ce}) equals the programmed value. The power source will actually be supplying a larger potential, $V_{ce} + V_{be}$. Of course, the power supply must be capable of meeting specifications with this voltage differential between the sense terminals and the power supply output. While in this example, the voltage difference is only about 0.6 volts, if FETs were being tested, then up to 10 volts difference may be required.

Suppose it is required as part of the component testing, that V_{ce} be set at 0.5 volts. It is obvious that V_c would have to be - 0.1 volts, which could not be provided with the power supplies connected as in Figure 5.

The Flexible Biasing Solution for Three-Terminal Device Testing

The problem which occurred in the last configuration can be solved by replacing V_c with either a bipolar source or equivalently, two back-to-back sources as shown in Figure 6. Notice that the source at the emitter terminal was also modified to provide a similar bi-polar capability.

The configuration in Figure 6 allows precise dc bias conditions to be regulated automatically, prevents runaway conditions, and does not consume extra controller time. This configuration can be used to test a wide variety of two and three-terminal devices.

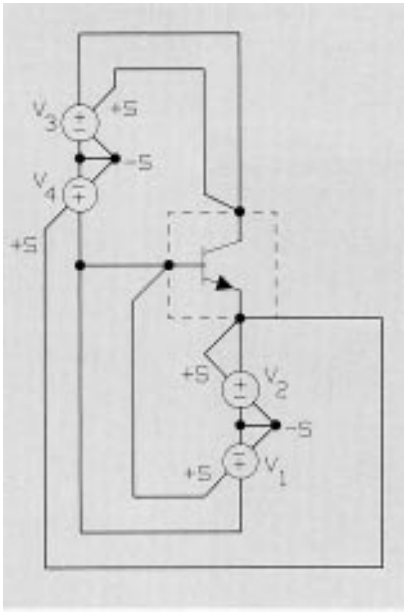

Figure 6. The Flexible Biasing Solution for Three-terminal Device Testing

Notes On The DC Power Sources

To effectively test a variety of devices using the circuit in Figure 6, the power sources must have the following characteristics:

1. adequate programming resolution and accuracy
2. readback of voltage and current
3. adequate readback resolution and accuracy
4. a large allowable voltage differential between output and sense terminals
5. the ability to source and sink current

An example of a power supply solution which will meet all the requirements above for a wide range of components under test is the HP 6626A Multiple Output System Power Supply. It has two 25 watt outputs and two 50 watt outputs. The 25 watt outputs can produce 0.5 amps each and the 50 watt outputs can produce 2.0 amps each.

HP Model 6626A has programming and readback resolution of up to 0.5 mV and 1µA. It allows up to 10 volts difference between the load leads and the sense leads, and it can both source and sink current.

For higher current devices, the HP 6629A Multiple Output System Power Supply might be a better choice. All four outputs provide 2.0 amps at 50 watts.

When testing three-terminal devices with either an HP 6626A or an HP 6629A, the HP 14552A Bias Cable makes power supply connections easy. The cable connects the output and sense terminals of all four power supply outputs to two BNC connectors in the configuration shown in Figure 7. A test fixture can then be simply connected at the two BNCs.

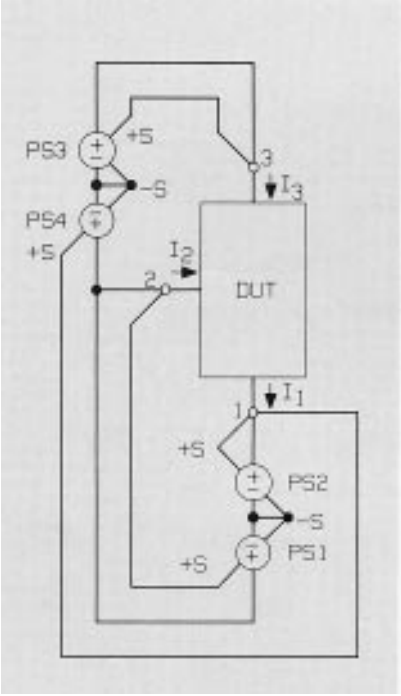

Figure 7. Generalized Configuration for a Flexible Biasing Solution for Three-terminal Device Testing

Programming Example

The following subprograms can be used as drivers for controlling an HP Model 6626A Multiple Output DC Power Supply with an HP Series 200/300 Computer, using the HP BASIC language.

These routines are written with variable names that correspond to the node numbers on the device under test in Figure 7. Device currents are also as defined in Figure 7. V_O1, V_O2, V_O3, and V_O4 refer to the voltage at the sense leads of the four power supply outputs, PS1, PS2, PS3, and PS4. The currents leaving the positive terminals of the four power supply outputs are referred to as 1_O1 1_O2, 1_O3, and 1_O4. When voltage and current levels are read back, they are referred to as $Vr_2$1, Vr_3l, 1_r1 and 1_r3.

The method used in this example to achieve a bipolar mode of operation by connecting two power supply outputs is called series-opposing. The two opposing power sources in a pair are set at equal levels, which subtract with a resultant of zero volts. One of these outputs is then held fixed, and the other is varied to yield a non-zero resultant voltage. For example:

if $V_O3 = V_O4 = 10$ volts
then $V32 = V_O3 + (-V_O4)$
$= 10 - 10 = 0$

if $V_O3 = 15$ volts
then $V32 = V_O3 + (-V_O4)$
$= 15 - 10 = 5$ volts.

Initialization

The initialization procedure, SUB Init, ramps all four power supply outputs to preassigned levels by incrementing the outputs in small voltage steps. The outputs are set in this manner rather than programmed in one large step to avoid putting a significant voltage momentarily on the device under test. Even though one command string can contain instructions for more than one output, power supply outputs are changed one at a time. Because of this, the outputs cannot be changed simultaneously. Initializing with small steps keeps the resultant voltage error no larger than the step size.

When choosing the voltage value to initialize the power supply outputs, you should keep in mind a few guidelines. First, remember the maximum drop that is permitted between a power supply output and it's sense terminals. In the case of the HP 6626A it is ten volts. In addition, the use of the initialized offsets reduces the voltage available for component test by the offset value. Finally, the HP 6626A must be programmed to a minimum of 3.5 volts while in the current sink mode to maintain regulation.

Besides executing the Init procedure during initial setup of your tests, it should also be called before changing the polarity of the voltage across any two device nodes.

Subprograms To Set Voltage and Current

There are four subprograms given for programming outputs: SUB Set__v31, SUB Set__v21, SUB Set__i1, SUB Set__i3. These names refer to node numbers, not power supply outputs.

These subprograms all follow similar procedures. They first determine the polarity of the requested output value. This defines which is the correct power supply output to adjust away from the preset voltage or the current limit. The outputs of the pair are then programmed to the appropriate levels.

Note that when programming current, the non-controlling source of a pair is set at its maximum current. This will keep the controlling source in the CC mode. The maximum current is considered as 0.51 amps for the two amp sources, because all current flows through both the half amp and two amp sources at the same time. Therefore, one half amp is the system maximum current.

Subprograms To Measure Voltage and Current

There are four subprograms given for measuring voltage and current: SUB Meas__v21, SUB Meas__v31, SUB Meas__i1 SUB Meas__i3. These also refer to node numbers.

The two subprograms for voltage measurement read the voltage at the sense terminals of both of the power supplies of the appropriate pair. Then these two values are subtracted to compute the node to node voltage. The two procedures for current measurement simply read the current from one of the outputs of the appropriate power supply series-opposing pair.

```
630 !
640 !
650 !
660   SUB Init(@Ps,C,E)
670   !SUPPLIES INCREMENTED IN .05 VOLT STEPS TO FINAL VALUE "C" FOR P.S. 3&4
680   ! AND VALUE "E" FOR P.S. 1&2
690     OUTPUT @Ps;"ISET 1,.001";";ISET 2,.001";";ISET 3,.001";";ISET 4,.001"
700     OUTPUT @Ps;"VRSET 3";C;";VRSET 4";C;";VRSET 1";E;";VRSET 2";E
710     FOR X=0 TO C STEP .05
720       OUTPUT @Ps;"VSET 3";X;";VSET 4";X
730     NEXT X
740     FOR Y=0 TO E STEP .05
750       OUTPUT @Ps;"VSET 1";Y;";VSET 2";Y
760     NEXT Y
770   SUBEND
780 !
790 !
800 !
810   SUB Set_v31(@Ps,V31,C)
820   ! SUPPLIES 3 & 4 PROGRAMMED TO PRODUCE V31
830     IF V31>0 THEN
840   ! FOR POSITIVE VALUES OF V31
850       OUTPUT @Ps;"VRSET 3";V31+C;";VSET 3";V31+C
860     ELSE
870   !FOR NEGATIVE VALUES OF V31
880       OUTPUT @Ps;"VRSET 4";ABS(V31)+C;";VSET 4";ABS(V31)+C
890     END IF
900   SUBEND
910 !
920 !
930 !
940   SUB Set_v21(@Ps,V21,E)
950   !SUPPLIES 1 & 2 PROGRAMMED TO PRODUCE V21
960     IF V21>0 THEN
970   !FOR POSITIVE VALUES OF V21
980       OUTPUT @Ps;"VRSET 1";(V21+E);";VSET 1";(V21+E)
990     ELSE
1000    !FOR NEGATIVE VALUES OF V21
1010      OUTPUT @Ps;"VRSET 2";ABS(V21)+E;";VSET 2";ABS(V21)+E
1020    END IF
1030  SUBEND
1040!
1050!
```

```
1060!
1070  SUB Set_i1(@Ps,I1)
1080  !SUPPLIES 1 & 2 PROGRAMMED TO PRODUCE I1.
1090    IF I1>=0 THEN
1100  !FOR POSITIVE VALUES OF I1
1110      OUTPUT @Ps;"IRSET 1";I1;";ISET 1";I1;";IRSET 2 .5";";ISET 2,.51"
1120    ELSE
1130    !FOR NEGATIVE VALUES OF I1
1140      OUTPUT @Ps;"IRSET 2";ABS(I1);";ISET 2";ABS(I1);";IRSET 1,.5";";ISET 1,
.51"
1150    END IF
1160  SUBEND
1170!
1180!
1190!
1200  SUB Set_i3(@Ps,I3)
1210  !SUPPLIES 3 & 4 PROGRAMMED TO PRODUCE I3.
1220    IF I3>=0 THEN
1230  !FOR POSITIVE VALUES OF I3
1240      OUTPUT @Ps;"IRSET 3";I3;";ISET 3";I3;";IRSET 4,2;ISET 4,.51"
1250    ELSE
1260    !FOR NEGATIVE VALUES OF I3
1270      OUTPUT @Ps;"IRSET 4";ABS(I3);";ISET 4";ABS(I3);";IRSET 3,2;ISET 3,.51"
1280    END IF
1290  SUBEND
1300!
1310!
1320!
1330  SUB Meas_v21(@Ps,Vr21)
1340  ! OUTPUT OF SUPPLIES 1&2 MEASURED & V21 CALCULATED.
1350    OUTPUT @Ps;"VOUT? 1"
1360    ENTER @Ps;Vo1
1370    OUTPUT @Ps;"VOUT? 2"
1380    ENTER @Ps;Vo2
1390    Vr21=Vo1-Vo2
1400  SUBEND
1410!
1420!
1430!
1440  SUB Meas_v31(@Ps,Vr31)
1450  !OUTPUT OF SUPPLIES 3&4 MEASURED AND V31 CALCULATED.
1460    OUTPUT @Ps;"VOUT? 3"
1470    ENTER @Ps;Vo3
1480    OUTPUT @Ps;"VOUT? 4"
1490    ENTER @Ps;Vo4
1500    Vr31=Vo3-Vo4
1510  SUBEND
1520!
1530!
1540!
1550  SUB Meas_i1(@Ps,Ir1)
1560  !CURRENT THROUGH SUPPLY 1 MEASURED.
1570    OUTPUT @Ps;"IOUT? 1"
1580    ENTER @Ps;Ir1
1590  SUBEND
1600!
1610!
1620!
1630  SUB Meas_i3(@Ps,Ir3)
1640  !CURRENT THROUGH SUPPLY 3 MEASURED.
1650    OUTPUT @Ps;"IOUT? 3"
1660    ENTER @Ps;Ir3
1670  SUBEND
```

HEWLETT® PACKARD

For more information about Hewlett-Packard Test and Measurement products, applications, services, and for a current sales office listing, visit our web site, http://www.hp.com/go/tmdir. You can also contact one of the following centers and ask for a test and measurement sales representative.

United States:
Hewlett-Packard Company
Test and Measurement Call Center
P.O. Box 4026
Englewood, CO 80155-4026
1 800 452 4844

Canada:
Hewlett-Packard Canada Ltd.
5150 Spectrum Way
Mississauga, Ontario
L4W 5G1
(905) 206 4725

Europe:
Hewlett-Packard
European Marketing Centre
P.O. Box 999
1180 AZ Amstelveen
The Netherlands
(31 20) 547 9900

Japan:
Hewlett-Packard Japan Ltd.
Measurement Assistance Center
9-1, Takakura-Cho, Hachioji-Shi,
Tokyo 192, Japan
Tel: (81-426) 56-7832
Fax: (81-426) 56-7840

Latin America:
Hewlett-Packard
Latin American Region Headquarters
5200 Blue Lagoon Drive
9th Floor
Miami, Florida 33126
U.S.A.
(305) 267 4245/4220

Australia/New Zealand:
Hewlett-Packard Australia Ltd.
31-41 Joseph Street
Blackburn, Victoria 3130
Australia
1 800 629 485

Asia Pacific:
Hewlett-Packard Asia Pacific Ltd
17-21/F Shell Tower, Times Square,
1 Matheson Street, Causeway Bay,
Hong Kong
Tel: (852) 2599 7777
Fax: (852) 2506 9285

Data subject to change
Copyright © 1989
Hewlett-Packard Company
Printed in U.S.A. 5/05/89/R
5952-4193