Agilent
Microwave Component Measurements Amplifier Measurements Using the Scalar Network Analyzer

Application Note 345-1

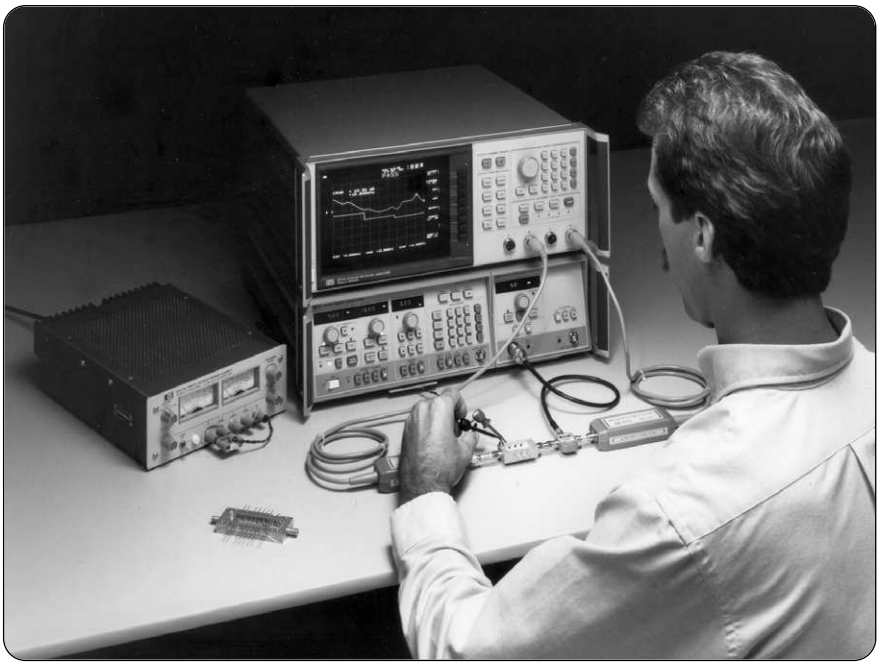

Agilent Technologies

Introduction

A scalar network analyzer provides fast, economical measurements of many amplifier parameters. This note describes gain, gain compression, isolation, and return loss (SWR) measurements using the Agilent 8757A Scalar Network Analyzer and the Agilent 8350B Sweep Oscillator to illustrate the techniques. Definitions and specific step-by-step instructions are included, along with a description of accuracy considerations. The system features, such as alternate sweep, power sweep, trace cursor and pass/fail limit lines are described.

All measurements described in this note are possible without the use of a computer. However, it is possible to automate these measurements using the same measurement sequences. For more information on the Agilent 8757A and amplifier measurements, refer to the references listed on page 15.

This note describes how scalar network analysis can be used to measure several important amplifier parameters as a function of both frequency and input power. It is important to keep in mind that many other factors can affect amplifier performance, such as bias level, temperature, and time. In amplifier measurements, all these variables must be taken into account for complete device characterization.

Equipment required

The following equipment is used in the measurements described in this note.

8757A Scalar Network Analyzer
8350B/83592A Sweep Oscillator*
85027B Directional Bridge
85025B Detectors
11667B Power Splitter
85023B Verification Kit
85022A system cable kit

The Agilent 8757A is a powerful, easy to use scalar analyzer. It provides three detector inputs (a fourth input is optional), and four independent display channels. With the 11664A/E Detectors, the 8757A offers -60 dBm sensitivity at sweep speeds as fast as 50 ms. With the Agilent 85025A/B Detectors and the Agilent 85027A/B/C Directional Bridges, the 8757A offers the choice between two detection modes. In AC mode, the detectors detect the envelope of signals modulated by a 27.778 kHz square wave. This modulation is provided internally by the Agilent 8350B sweep oscillator. Spurious unmodulated signals and broadband noise are undetected. In DC detection mode modulation is not required, and the detector responds to all signals in its frequency range.

*** The 8350B Sweep Oscillator is used in all of the following measurement setups. An 8340B or 8341B Synthesized Sweeper could also be used for applications requiring higher frequency accuracy and stability. When higher source power is required to deliver more power to the device under test, the 8349B amplifier can be used to provide up to +18 dBm from 2-20 GHz.**

Amplifier definitions

This section contains brief descriptions of the amplifier parameters that can be measured using a scalar network analyzer.

Gain

Amplifier gain is defined as the ratio (in milliwatts) of the amplifier output power delivered to a Z_O load to the input power delivered from a Z_O source, where Z_O is the characteristic impedance in which the amplifier is used (50Ω in this note). In logarithmic terms, the gain is the difference in dB, between the output and input power levels, expressed in dBm.

Amplifier gain is most commonly specified as a minimum gain value in the linear operating range. This would guarantee a given output power for a given input power. Since variations in frequency response can cause distortion, "gain flatness" is often specified over the frequency range of the amplifier.

Gain compression

Figure 1–a shows an example plot of amplifier output power versus input power at a single frequency. Gain at any power level is the slope of this curve (Figure 1–b). Notice that the amplifier has a region of constant gain, where gain is independent of input power level.

Reverse isolation

Reverse isolation is the measure of transmission from output to input. The measurement of isolation is similar to the measurement of gain, except that the amplifier is reversed. Reverse isolation is typically 1.5 to 2 times the forward gain.

This is commonly referred to as "small signal gain". As the input power is increased to a level that causes the amplifier to saturate, gain decreases, causing the "large signal" response, showing the limitation in the amplifier's output power.

In this note, gain compression is measured by measuring the output power when gain is decreased by 1 dB (see Figure 1-b). This "1-dB gain compression point" (P_{1dB}) is a common measure of an amplifier's output capability. Both single frequency and swept gain compression tests are described in this note.

Another common measure of amplifier output is P_{sat}, the maximum power an amplifier can deliver. P_{sat} is the output power level for which further increase in input power yields no further increase in output power. P_{sat} measurements are not described in this note.

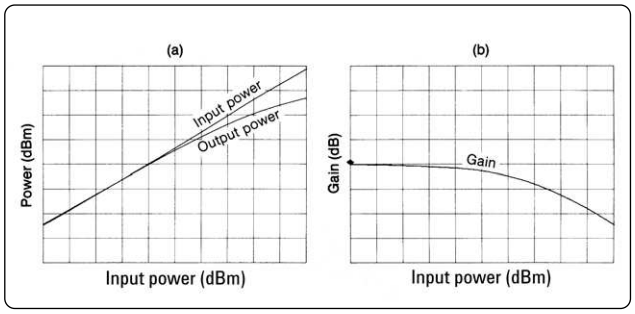

Figure 1. Typical amplifier's characteristics: (a) Output power versus input power and (b) gain versus input power.

Return loss (SWR)

Another amplifier parameter commonly specified is the impedance match at the input and output ports. The most common scalar parameters are defined by the following equations:

$$\rho = V_{reflected} / V_{incident}$$

$$\text{Return loss} = -20 \log_{10}\rho$$

$$\text{SWR} = \frac{1+\rho}{1-\rho}$$

Gain, compression, and isolation measurements

Gain, gain compression, and power can all be measured using the setup shown in Figure 3. Note that ratioing is performed using the power splitter. This ratioing improves the effective source match to remove the effects of re-reflected signals and permits gain measurements to be made at different RF power levels without recalibrating. Since source power level variations are monitored in both the reference and measurement channels, their effect is removed from the ratio.

This same source match improvement can also be accomplished using source leveling, as described in *Ratioing or Leveling* in the section *Accuracy Considerations*. Also note that ratioing or source leveling could be accomplished using a directional coupler such as the 11692D instead of a power splitter. The coupler causes less power loss, but typically is not as broadband as the power splitter.

Attenuation of the amplifier output is recommended as required to keep the power level to the detectors in their square law region of operation, below approximately –15 dBm, especially when gain compression will be measured. Note that the attenuators will be included in the transmission thru normalization, so their frequency response will be removed from the measurement is described more in the section *Accuracy Considerations*.

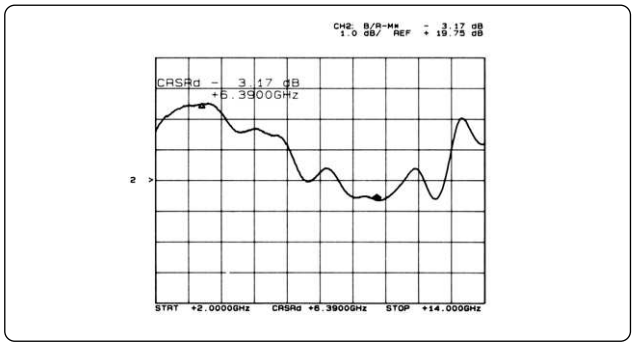

Figure 4. Example 8757A plot of amplifier gain vs. frequency

Small signal gain

Small signal gain is the gain in the amplifier's linear region of operation. Figure 4 shows an example swept frequency gain measurement. Ratioing in this measurement removes frequency response and improves the effective source match. However, normalization is also required, even when ratioing, to remove tracking differences between the two arms of the power splitter and between the two detectors (B and R). This normalization is also described in the small signal gain measurement procedure.

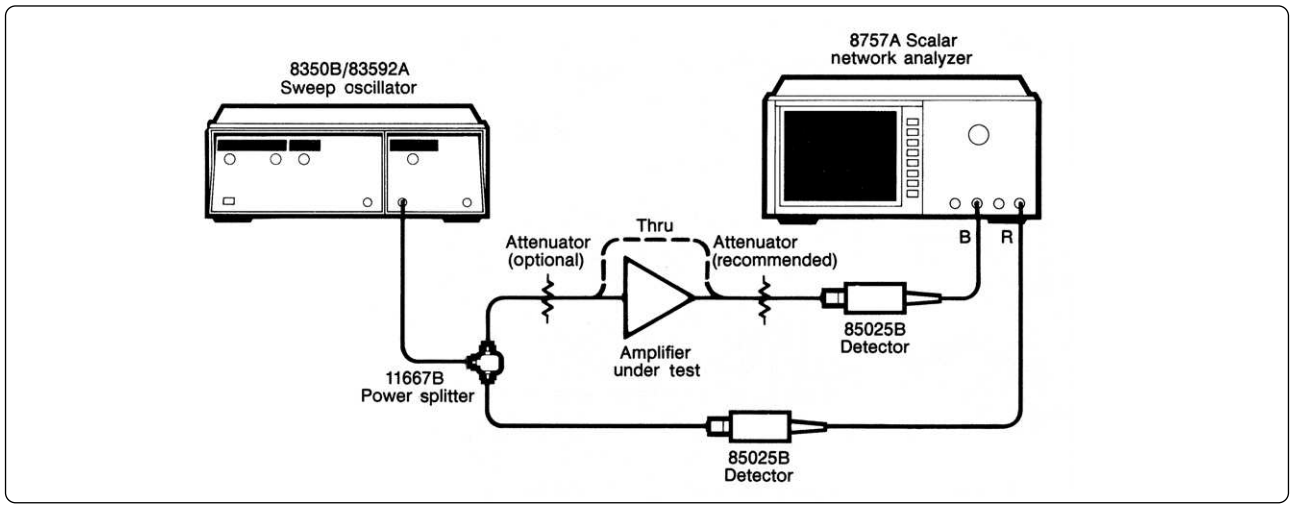

Figure 3. Test setup for measuring amplifier gain and gain compression characteristics.

Measurement sequence

Small signal gain measurement

The following procedure describes the measurement of small signal gain versus frequency.

1. Connect the instruments as shown in Figure 3. Connect the B detector directly to the test port. (Do not connect the device under test yet.)

2. Press **[PRESET]*** on the 8757A. This brings the analyzer and sweeper to a knon state.

3. Press the [CHAN 1 OFF] soft key on the 8757A. This turns channel off, and leaves channel 2 being displayed as the active channel.

4. Press **[MEAS]**, then select [B/R]. This displays the ratio B/R on channel 2.

5. Press **[SYSTEM]**, then select the desired detection mode, AC or DC. DC mode can be only used with the 85025 and 85026 series detectors. For a description of these detection modes, refer to the section AC versus DC Detection in Amplifier Measurements.

If using AC mode, skip step 6 and go to step 7.

6. Zero the DC detectors. To do this, press **[CAL]**, then select [DC DET ZERO]. Press [AUTOZRO]. This detector zeroing should be repeated once every 5–10 minutes when using DC mode. To do this automatically, turn on [REPT AZ] in the DC DET ZERO menu, and set the REPT AZ TIMER to the desired time value.

7. Set the desired START and STOP frequencies on the source. Also set the source power level, keeping in mind that you will have about 6 dB loss through the power splitter. To measure power at the test port, press **[CHANNEL 1]**, then **[MEAS]**, then select [B]. Press **[SCALE]**, then select [AUTOSCALE] to view the data. Press **[CURSOR]** and use the knob for a reading of power and frequency across the trace. Adjust the power level of the source to the desired level. Press **[CHANNEL 1]**, then press [CHAN 1 OFF] to turn channel 1 off again.

8. Calibrate with the THRU connection. Press [CAL], and select [THRU]. Be sure the THRU connection is made, then press [STORE THRU] to place the calibration data into memory. Press **[DISPLAY]**, then select [MEAS-MEM] to view the normalized trace (B/R–M). Sometimes averaging may be required during calibration to remove the effects of noise. This becomes particularly important when the detectors are measuring low level signals (<–40 dBm). To activate averaging during calibration, select [AVG ON] in the thru calibration menu. (The default averaging factor is 8). Wait until the trace stabilizes before selecting [STORE THRU].

9. Insert the amplifier under test and apply the appropriate bias. (If averaging is on, restart averaging by pressing **[AVG]**, then [RESTART AVG].) Press **[SCALE]**, then [AUTOSCALE] to view then small signal gain. Press **[CURSOR]**, and use the knob for a reading of gain at any point along the trace.

10. To measure gain variation or “ripple” in this frequency range, use the cursor delta function. Press **[CURSOR]**, select [MAX], then turn CURSOR D ON. Now select [MIN]. The active entry area now displays the total peak-to-peak variation in gain across the band (see Figure 4)

***In this note, the Agilent 8757A front panel keys such as [PRESET] appear in bold type, as opposed to the “softkeys” labeled on the CRT, which appear in regular type (e.g. [CHAN 1 OFF])**

Gain compression

There are several ways to measure amplifier gain compression using a scalar network analysis system. The methods described here show how to cause 1–dB compression of the amplifier, then how to measure P_{1dB}, the amplifier output power when 1–dB compression occurs. Both swept frequency and single frequency methods are described. The first method is a swept frequency measurement, which uses Alternate Sweep mode to measure small signal gain and large signal gain simultaneously.

Swept gain compression

Swept gain compression measurements can be made using the Alternate Sweep feature of the 8757 and the 8350 to alternate between two instrument states at different power levels (see Figure 6). Both small signal gain and large signal gain can be viewed in real time. The difference between traces is due to compression. The source power can be adjusted so that 1–dB compression occurs at any desired frequency, and then the power out, P_{1dB}, can be measured with a separate channel.

Notice in this measurement that both traces are active, so it is possible to see how device tuning affects both small and large signal gain. This makes device tuning more effective.

Normalized swept gain compression

In the alternate sweep measurement, it is difficult to see exactly at which frequency 1–dB gain compression first occurs. This can be more easily seen using normalization to the small signal gain. Small signal gain is placed into memory, then normalized. As the power level is increased, compression can be observed as the drop from a flat reference line. The worst case frequency can be easily determined (see Figure 7). Notice that in this measurement, the actual values of small and large signal gain are not displayed.

Single frequency gain compression

The normalized compression measurement is a very useful test for finding the worst case compression point. Again, it is a swept frequency measurement of gain compression. Notice, however, that neither of the above methods provides a systematic method of measuring the power at 1 dB compression for a given frequency. This can be accomplished using the power sweep feature of the 8350B. At a single CW frequency, a power ramp is input to the amplifier under test, and gain is measured directly as a function of input power (see Figure 8). Again, output power, P1dB can be displayed on a separate channel.

When using power sweep with the 8350B with RF plug-in and the optional step attenuator, it is important to understand the interaction between the Automatic Leveling Circuit (ALC) and the attenuator. For details on how to sweep over a given range of power, see Appendix 2.

Reverse isolation

Transmission from output to input is defined as the reverse isolation of an amplifier. It can be measured using the setup shown in Figure 8. Note that Figure 5 is very similar to Figure 3 used to measure small signal gain. The differences are that the amplifier is reversed, and that the test port power level should be significantly higher, as close as possible to the amplifier's typical output power level.

To measure isolation with the 8757A, follow the instructions for measuring small signal gain, making adjustments as needed.

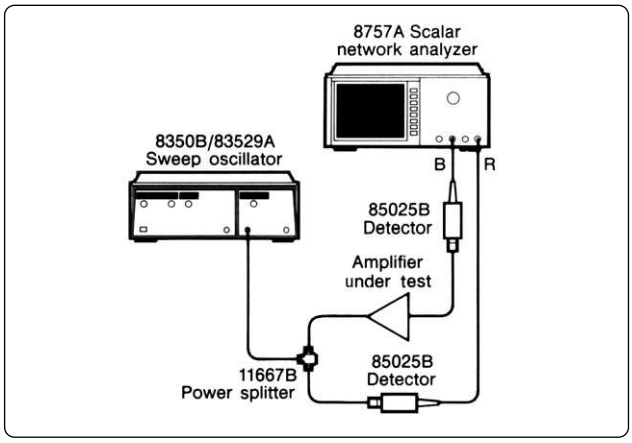

Figure 5. Test setup for measuring amplifier isolation.

Measurement sequence

Gain compression measurements

he following procedure describes how to measure amplifier gain compression. This measurement assumes that you have already measured the small signal gain as described in the previous section. The setup and calibration data remain the same.

Swept gain compression (alternate sweep)

1. Be sure channel 2 is measuring normalized gain (B/R–M). Note the power level indicated by the sweeper.

2. Compression can be seen easily by simply increasing the power level from the source. When the amplifier saturates, the gain trace will fall. Return the power level to the small-signal input level.

3. Display small signal gain (B/R–M) on both channels 1 and 2. Normalize both channels using the **[CAL]**, [THRU] sequence described in step 8 of the section on gain measurements.

4. Connect the amplifier under test. Set the scale and reference level to identical levels on both channels so that the traces overlap. Both traces should show the amplifier's small signal gain.

5. Enable ALTERNATE SWEEP. On the source, press **[SAVE] [1]**, then press **[ALT n] [1]**. The system is now alternating between two identical states, and the traces should still overlap.

6. Press **[CHANNEL 1]**, then increase the source power level on the present state by pressing **[POWER LEVEL]** and turning the knob. As the amplifier satu rates, the channel 1 trace will fall Figure 6 shows an example.

   Channel 1 shows the large signal gain, and channel 2 shows the small signal gain. The system alternates between the two input power levels. Gain compression at any frequency is simply the differ-ence between the two traces.

7. In this configuration, power can be measured on channel 3. Press **[CHANNEL 1]**, then select **[CHANNEL 3]**. Press **[MEAS]** and select [B] to display the amplifier output power in compression or [R] to display the input power to cause compression. Since channels 1 and 3 are alternated with channels 2 and 4, channel 3 in this configuration will display the large signal output power (see Figure 6).

8. Press **[ALT n]** to deactivate alternate sweep. Return the source power level to the small signal input. Turn off channel 2 by pressing **[CHANNEL 2]**, then [CHAN 2 OFF].

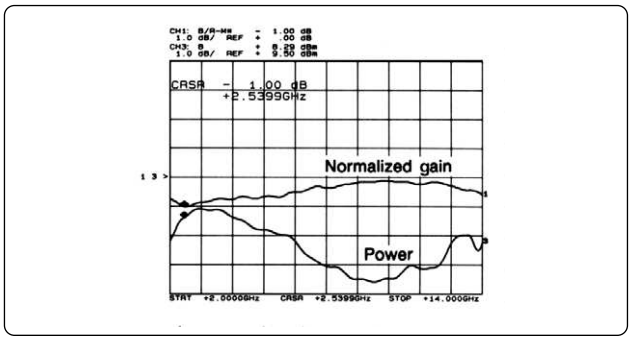

Figure 7. Example normalized swept frequency gain compression measurement. Gain compression is measured relative to small signal gain.

Normalized swept gain compression

1. With channel 1 still measuring normalized small signal gain (B/RM), press **[CHANNEL 1]**, **[DISPLAY]**, then select [MEAS–>MEM].

   The channel 1 display is now normalized to the ampli fier's small signal gain. Press **[SCALE]** and select [AUTOSCALE]. The trace should be a flat line near 0 dB.

2. Increase the source power level until the trace falls by 1–dB at some frequency. An example is shown in Figure 7. This display shows compression from a flat trace, but does not show the actual values of small signal or large signal gain.

   Note again that power out (or in) can be displayed on channel 3. Read power at 1–dB compression.

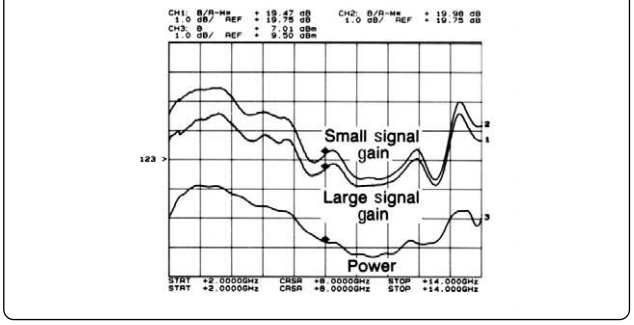

Figure 6. Example swept frequency gain compression measurement using the Alternate Sweep mode. The large signal gain trace shows amplifier gain compression.

Measurement sequence (cont'd)

Single frequency gain compression (power sweep)

Using the power sweep capability of the 8350B, gain and output power can be displayed as a function of input power level. This measure-ment, performed at a single frequency, is described below.

1. Return to the swept small signal gain measurement (B/R–M) on channel 1. You may need to normalize the measurement again using a THRU connection as de scribed in the first section. Display output power (B) on channel 3.

   Activate the adaptive normalization feature of the 8757A. Press [SYSTEM], then select [ADPT NM ON]. With adaptive normalization, as the frequency is changed, the calibration data will be adjusted.

2. Set any desired CW frequency on the source within the range of the original calibration. Press [SHIFT] [CW], then enter the frequency, for example [1] [0] [GHz].

   The left hand LED display should display zeroes. This indicates swept CW mode ([SHIFT CW]), in which the source SWEEP OUT drives the horizontal axis of the 8757A display to make this axis power instead of frequency.

3. Activate power sweep mode on the source. Press [POWER SWEEP], and the power sweep LED should be lit. On the sweeper, enter the sweep range required to saturate the amplifier, e.g. 10 dB per sweep. Most 8350B RF plug-ins can sweep up to 15 dB from the start power. See Appendix 2 for more information on using the

4. The 8757A display should now show the gain as a function of input power level at a single frequency. Figure 8 shows an example. Notice that the gain decreases as the amplifier enters saturation. If the gain does not decrease by the desired amount (usually 1 dB), then increase the dB/sweep value or the start power.

5. Press [CHANNEL 1], then select [CHANNEL 3]. Press [SCALE], then select [AUTOSCALE]. This trace shows the amplifier output power. Notice that this power in creases linearly until saturation occurs.

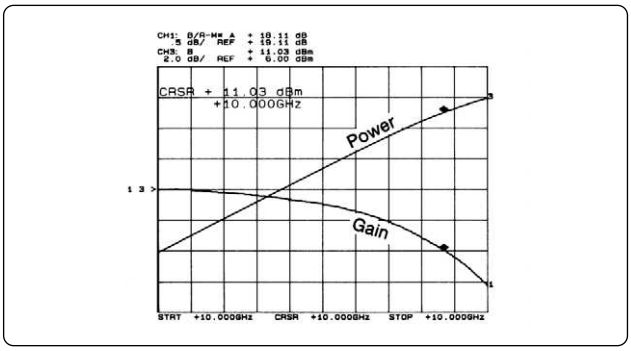

Figure 8. Single frequency gain compression measurement using the Power Sweep feature. Gain (and power) are displayed as a function of input power.

6. Find the power out at 1–dB compression. Use the cursor search function on channel 1, the 1–dB compression point can be found. The power out can then be read off the channel 3 cursor.

   Press [CHANNEL 1], [CURSOR], and select [MAX]. Activate the cursor delta function by selecting [CURSOR D ON]. Press [SEARCH], then select [SEARCH VALUE] and enter the desired search value, in this case –1.0 dB. Select [SEARCH RIGHT] and the cursor symbol will move to the 1–dB compression point. Deactivate the cursor search trace hold by pressing [CURSOR]. The channel 3 cursor should now read the amplifier output power at the 1–dB gain compression point (see Figure 8).

   If the message "Cursor value not found" appears on the analyzer, then the amplifier is not reaching its 1–dB compression point in the specified sweep. Increase the dB/Sweep or the start power.

7. Change the frequency and repeat the measurement. A convenient way to do this is to set a step size in GHz, and increment the frequency using the **[↑]** key on the sweeper. Press **[SHIFT] [CW] [↑]** to increment the frequency. It is not normally necessary to adjust the power sweep parameters once they are set up. The sweeper must, however, stay in swept CW mode.

Return loss/SWR measurements

Return loss and SWR are commonly specified for the amplifier input and output ports. With the 8757A, reflection can be displayed as return loss in dB or in standing wave ratio (SWR).

The reflection measurement setup shown in Figure 9 could be used for simultaneous reflection and transmission measurements. The 8757A can be easily configured to display return loss on channel 1 and gain on channel 2. If the reflection measurement is made with a separate setup, ratioing may not be required, since the measurement is often only made at one power level. If reflection is tested at several power levels, then ratioing is recommended.

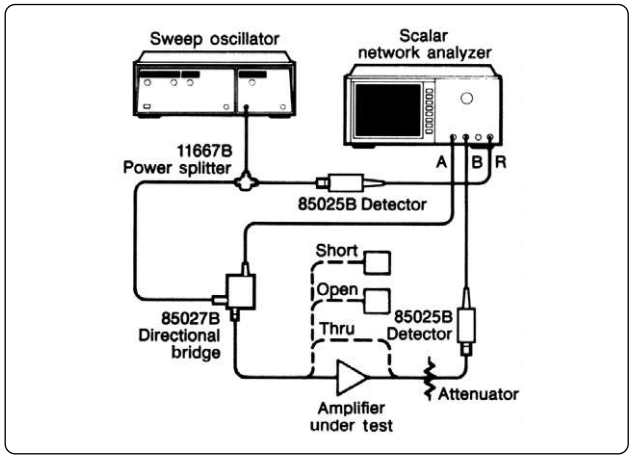

Figure 9. Test setup for simultaneous measurement of amplifier gain and input return loss.

Reflection parameters can be measured with a directional bridge or with a directional coupler and another detector. The setup of Figure 9 describes the measurement with an 85027B Directional Bridge, but also applies to a directional coupler, such as the 11692D.

Calibration for reflection measurements is performed by normalizing to the average response of a short circuit and an open circuit. This removes errors that occur during calibration, due to directivity and source match. This is discussed further in *Accuracy Considerations*.

Measurement Sequence

The following procedure describes basic reflection measurements with the 8757A.

1. Connect the equipment as shown in Figure 9. Ratioing with the power splitter may not be required.

2. Activate channel 1 and turn all other channels off. Press **[MEAS]** and select [A/R]. Channel 1 will then display input A/R.

3. Press **[SYSTEM]**, and select the desired detection mode AC or DC. Either detection can be used with any of the 85027 series directional bridges.

If using AC detection mode, skip step 4 and go to step 5.

4. *Zero the DC accessories. To do this, press* **[CAL]**, then select [DC DET ZERO]. Press [AUTO ZERO].

   This detector zeroing should be repeated once every 5–10 minutes. To do this automatically, turn on [REPT AZ] in the DC DET ZERO menu, and set the REPT AZ TIMER to the desired time value.

5. Set the desired START and STOP frequencies on the source. Also set the source power level. Remember, you will have approximately 6–8 dB loss through the direc tional bridge.

6. Press **[CAL]** and select [SHORT/OPEN]. This initiates the short/open calibration procedure. As prompted, connect the short circuit and press [STORE SHORT]. Again as prompted, connect the shielded open circuit and press [STORE OPEN].

   This procedure places the short/open average into the channel 1 memory. Press **[DISPLAY]**, then select [MEAS-MEM] to normalize the display trace.

7. Connect the device under test. Connect in the forward direction to measure input return loss or in the reverse direction for output return loss.

8. Press **[SCALE]** and select [AUTOSCALE]. Press **[CURSOR]** and use the knob to read the return loss in dB at any point along the trace. Figure 10 shows an example.

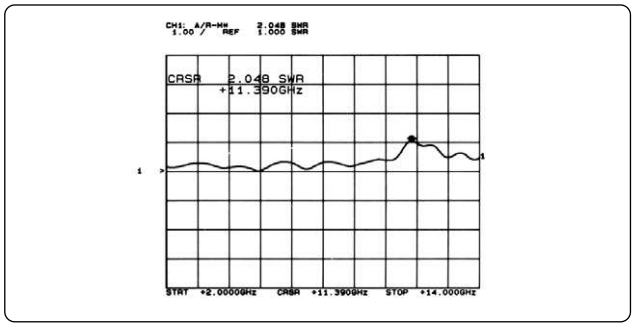

Figure 11. Example input SWR plot in dB.

Measurement Sequence (cont'd)
Measuring SWR

The reflection data can also be displayed as standing wave ratio (SWR).*

9. To view SWR, simply change the trace format. Press [DISPLAY], then select [TRC FMT SWR]. The trace is then displayed in SWR. Press [CURSOR] and use the knob to view the SWR at any point along the trace (see Figure 11).

   The trace format can be changed at any time without affecting the calibration in trace memory. Even if the calibration is performed while in SWR trace mode, the calibration (stored in dB) is still valid.

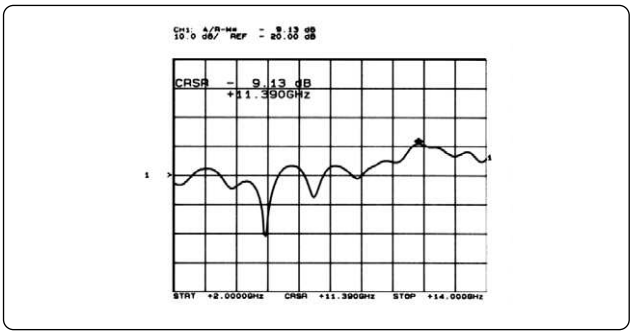

Figure 10. Example input return loss plot in dB.

Using limit lines and SAVE/RECALL

Using the limit line feature of the 8757A, specification limits can be entered on the screen for comparison to the measured data. Up to 12 limit entries can be entered as point limits, sloped lines, or flat lines. The minimum gain specification, for example, can be entered as a lower limit. If the gain falls below this lower limit, then a FAIL condition exists. Upper and lower limits could also be entered for testing of gain ripple or flatness. For reflection measurements, a SWR upper limit could be entered and displayed as the pass/fail criterion.

The following procedure describes how to enter a series of flat limit line entries for testing the minimum gain on channel 2.

1. Press **[CHANNEL 2]** to activate channel 2. Press **[SPCL]**, then press the [ENTER LMT LNS] soft key. Erase any limits that may have already been entered by selecting [DELETE ALL LNS].

2. Select [FLAT LIMIT], and the label "FLAT FREQ #1?" appears on the display. Enter the frequency of the start of the limit line, and terminate the entry using the appropriate soft key.

3. The analyzer will prompt you for the upper and lower limit values. In this case, we only use a lower limit, since we are testing against a minimum gain specification. Just press the [ENT] key when prompted for the upper limit. When prompted for the lower limit, enter the minimum gain specification and terminate the entry with the [dB/dBm] key.

4. Repeat steps 1 through 3 above as necessary until all limits are entered.

5. Turn on limit lines by selecting [DONE], then [LIM LNS ON]. Figure 12 shows an example limit entry with 3 flat segments.

Saving the measurement

Once a measurement is configured, it can be stored for future use in one of the nine SAVE/RECALL registers of the 8757A. The first four of these registers will also save limit lines and calibration data for channels 1 and 2. To store a measurement, press [SAVE], then a number 1 through 9. No terminator is required. This saves your measurement settings of both the analyzer and the source in non-volatile memory. Recall that measurement at any time by pressing [RECALL] and entering the same number.

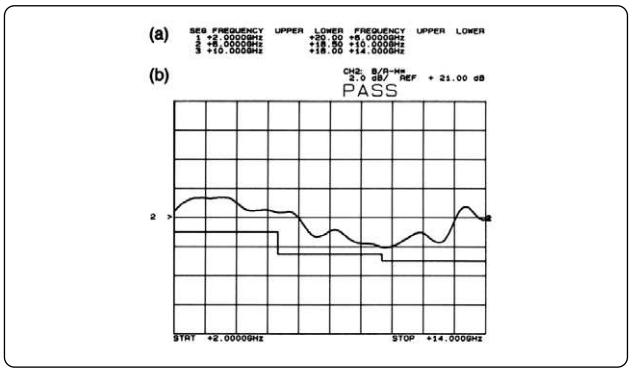

Figure 12. (a) Example limit line entries for minimum gain specification and (b) plot showing limit lines, gain trace and PASS/FAIL status.

*** To display SWR, the 8757A requires firmware revision 2.0 or higher. If your 8757A has revision less than 2.0, order the 11614A Firmware Enhancement to upgrade.**

Accuracy considerations

The accuracy of amplifier measurements with a scalar analyzer is determined by many factors. This section summarizes the key accuracy considerations for gain, gain compression, and return loss measurements, and discusses possible ways of reducing these errors.

Some applications may require better accuracy than the scalar analyzer can provide. A vector network analyzer, such as the 8510A, not only provides phase data, but also provides vector accuracy enhancement and immunity to harmonics and other spurious signals. The result is significantly better measurement accuracy.

Gain

The major sources of error in measuring amplifier gain with a scalar analyzer are the following:

- mismatch during calibration
- mismatch during measurement
- system dynamic accuracy

Mismatched errors are caused by re-reflection signals within the measurement system.

Mismatch during calibration results because the detector reflects a portion of the signal back toward the "effective source" (actually the power splitter). This reflected signal is then re-reflected from the source, causing an uncertainty which could add in phase or out of phase with the original signal. With detector match of 16 dB and effective source match of 20 dB, the worst case mismatch error in calibration is approximately ±0.14 dB (from mismatch calculator).

Mismatch during measurement is caused by two separate mismatches: the mismatch between the amplifier input and the source, and the mismatch between the amplifier output and the detector. For example, with an effective source match of 20 dB and an amplifier input match of 10 dB, the first mismatch error is approximately ±0.3 dB. With an amplifier output match of 10 dB and detector match of 16 dB, the second mismatch error is approximately ±0.4 dB. So the total mismatch error during measurement is ±0.7 dB.

In the worst case, calibration and measurement mismatch uncertainties combine to form a larger window of uncertainty, as shown in Figure 14. It is important to minimize the mismatches to minimize the total measurement uncertainty.

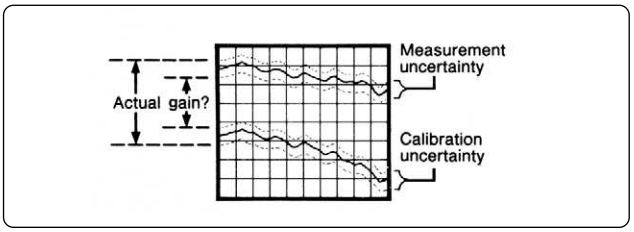

Figure 14. Total mismatch uncertainty includes both calibration and measurement uncertainty as shown.

The uncertainty due to mismatches is a function of three things:

- effective source match
- detector match
- match of the amplifier under test.

The effective source match can be improved using three techniques: ratioing, external source leveling, and isolation. Ratioing was used in the above example. For a comparison of ratioing and leveling, see Ratioing or Leveling. Isolation can be accomplished most easily with an attenuator on the output of the source. This attenuation decreases the magnitude of the re-reflected signal.

Effective detector match can be improved by inserting an attenuator before the detector. This improvement would be significant only if the attenuator has far better match than the detector. As the attenuation is increased, the "effective detector match" approaches the match of the attenuator. Amplifier match is normally a function of the amplifier design and cannot be further im- proved. However, it is important to realize that measurements of a well-matched amplifier will typically contain less uncertainty than those of a poorly matched amplifier.

Dynamic accuracy also influences gain measurement uncertainty. Gain is a relative measurement, that is, the output power relative to the input power measured with the thru normalization. This normalization accounts for the frequency response of the detectors. However, the system's response is also a function of power level. Specifically, if the power level seen by the detector is different between calibration and measurement, then the detector response causes an additional uncertainty in the measurement of gain.

The uncertainty due to the detector is a function of how much the power changes between calibration and measurement. This is specified on systems as "dynamic accuracy." Detector error over a 30 dB range is typically ±0.1 dB.

It is possible to reduce the effects of dynamic accuracy by inserting attenuation during the measurement (after calibration) to keep the calibration power level as close as possible to the measurement power level. For high gain measurements (>30 dB), this "post-attenuation" or RF substitution technique is recommended. However, the frequency response of the external attenuator must be removed from the measurement, since it is not included during the calibration process. The 8757A detector offset function can remove a nominal attenuation value from the measured data.

Gain compression

The measurement of gain compression is subject to the same errors as the measurement of gain, in addition to the following:

- detector power measurement accuracy
- harmonics at the detector

Power measurement accuracy. A gain compression measurement really consists of two measurements, first of gain, then of power when gain compresses by 1 dB (P_{1dB}). Normally, the uncertainty in the gain measurement will not translate directly to the uncertainty of the power measurement. When measuring compression, large signal gain is normally compared to small signal gain at a single frequency. Only the power level is changed. So the uncertainty in the measurement of 1–dB compression is the *uncertainty in the measurement of the difference between small signal gain* and large signal gain. This will be determined by the dynamic accuracy of the detectors and by how much the amplifier's match varies as it saturates.

The ability to measure power (dBm) also determines the accuracy of the measurement of P_{1dB}. Power accuracy is specified for the 85025 series detectors in DC mode (typically ± 0.15 dB), and is enhanced by referencing the detector to a power meter sensor as described in the 85025A/B Operating and Service Manual.

Harmonics. Another important factor in measuring amplifier compression is the presence of harmonics, most commonly second and third harmonics of the test signal. (Harmonics are also present in the measurement of gain, but their magnitude is typically low enough that their effect is negligible.)

When in compression, the amplifier under test tends to generate higher harmonic levels (for example 20 dBc), and this affects the accuracy of the scalar analyzer. Figure 15 shows the worst case uncertainty of a scalar power measurement in the presence of second harmonics, 15, 20, 25, and 30 dB below the fundamental. Notice that the errors are insignificant at the lower power levels, where the detector measures total rms power (square law region). For this reason, attenuation is recommended to keep the power level at the B detector as low as possible (below –15 dBm).

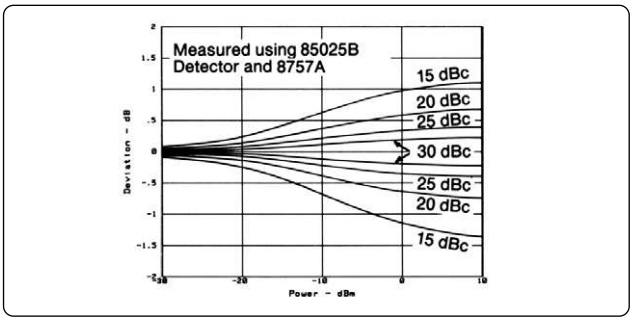

Figure 15. Worst case deviation from ideal square law operation, due to second harmonics when using a scalar network analyzer. Notice that the uncertainty is greater for high harmonic levels and at the higher power levels when the detector is in its linear operating region.

If the power level at the detector must remain high, filtering can be used to reduce the effect of harmonics on amplifier measurements. This can be done using a lowpass filter for measurements covering less than one octave. An example is shown in Figure 16–a. For more broadband measurements, a tracking filter can be connected as shown in Figure 16–b. In either case the effects of the filter (mismatch, frequency response, etc.) must be included in any uncertainty analysis.

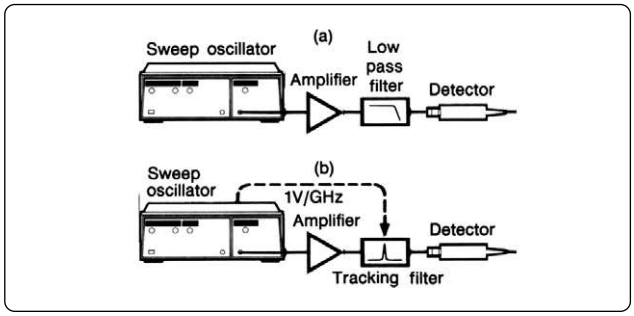

Figure 16. The effects of harmonics can be reduced using (a) a low pass filter when measuring less than one octave or (b) using a tracking filter for broadband measurements.

If filtering is not practical, operate the detectors in their square law region whenever possible to minimize the effects of harmonics.

Return loss

The uncertainty of return loss measurements is described by the following equation:

$$\Delta\rho = A = B\rho_L + C\rho_L^2$$

where $\Delta\rho$ is the uncertainty in the reflection coefficient, ρ_L is the reflection coefficient of the device under test, A is directivity, B is calibration uncertainty, and C is the effective source match.

The A term can be kept to a minimum using a high directivity directional bridge and high quality adapters. The B term can be removed through open/short averaging if a coaxial system is used. In waveguide, calibration can be accomplished with a short only (B=A+C). The C term can be reduced by improving source match using the techniques already discussed for gain measurements.

Ratioing or leveling

In a swept frequency measurement, effective source match can be improved either by ratioing or by leveling the source externally. Both methods provide similar source match improvement. However, there are important distinctions between the two techniques. This section describes the differences.

Ratioing improves effective source match by reducing the effect of source power variations versus frequency. Because the power variations appear in both detectors (B and R, for example), they are not seen in the ratio (B/R). Figure 17 shows a typical plot of B,R, and the ratio B/R. Notice that while B/R is relatively flat, B can vary by approximately ±0.5 dB. Some amplifier measurements can be adversely affected by this type of ripple, particularly with fast sweeps.

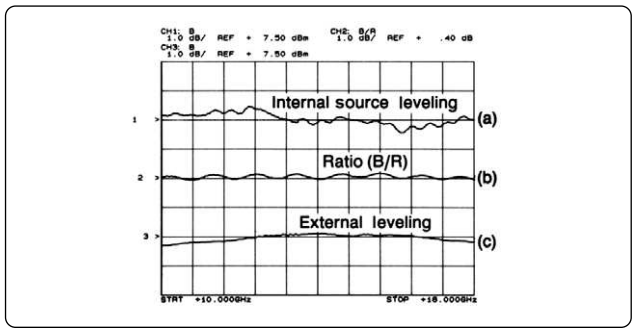

Figure 17. Comparison of leveling and ratioing techniques. Frequency response at the test port, using (a) internal source leveling, (b) the ratio B/R, and (c) external source leveling.

When ratioing, the power variation at the test port occurs because of mismatch between the detector and the source during calibration, and between the amplifier and the source during measurement. In either case, the R detector tracks the variations and they are removed from the ratio B/R.

While ratioing removes the effect of the source power variations, external source leveling actually reduces the variations directly. As shown in Figure 18–a, an external detector provides feedback to an automatic leveling circuit (ALC) which then modulates the source output power to compensate for mismatch at the test port. The result is that the source output power is flatter as a function of frequency (see Figure 17). For further information on external source leveling see Product Note 8350–9. The source power can also be leveled using the recorder output of a power meter, as shown in Figure 18–b.

The major advantage of external or power meter source leveling is that the power at the test port is controlled by a feedback loop, and is not subject to variations due to mismatch at the test port. However, ratioing is often more convenient and easy to use than source leveling.

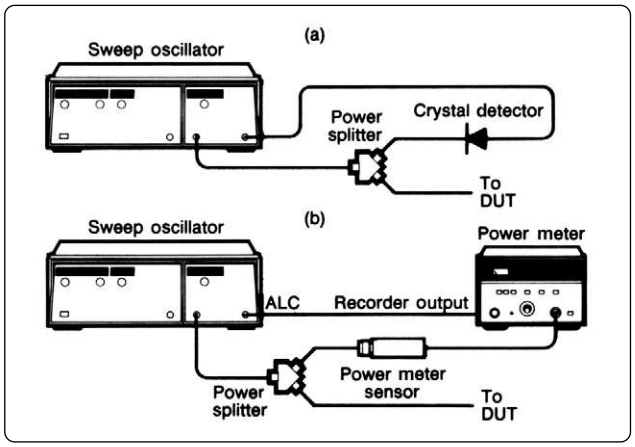

Figure 18. Source leveling techniques (a) using an external crystal detector and (b) using a power meter.

Appendix 1
AC versus DC detection

The 8757A offers a choice of detection modes: AC detection, which uses modulation for immunity to broadband noise and thermal drift, and DC detection, which offers fast accurate power measurements without modulation. This section describes the capabilities and advantages of each mode when measuring amplifiers.

In AC mode, the RF source is modulated by a 27.778 kHz square wave. The detector then processes only the modulated signal (see Figure A–1). (The 8350B sweep oscillator provides this modulation internally). Other signals, such as DC or thermal drift, broadband noise, and spurious signals from other sources are unmodulated and therefore go undetected. AC detection is ideal for most relative measurements, such as gain and return loss, particularly in the presence of undesired, unmodulated signals. AC detection also requires no detector zeroing.

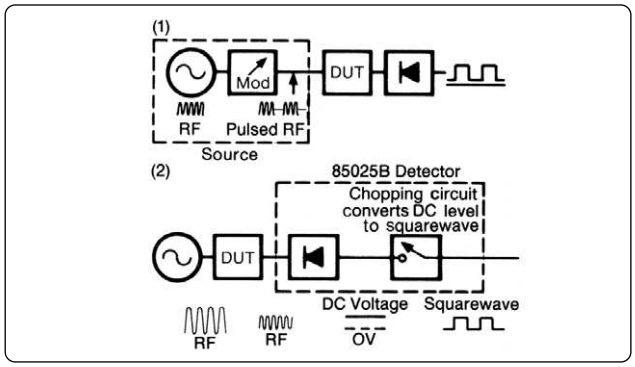

Figure A. Comparison of detection modes. (1) AC detection uses RF modulation, (2) DC detection detects unmodulated RF, then chops the detected signal. The receiver sees the same type square wave signal in either mode.

In DC mode, the detectors respond to all signals present, and 27.778 kHz source modulation is not required. As shown in Figure A–2, when in DC mode, the 85025 series Detectors chop the signal after detection to provide a 27.778 kHz square wave to the receiver. The receiver circuitry used is identical in both modes.
The choice between detection modes depends on the particular application. In many applications, the choice is arbitrary, because the results in either mode would be identical. But some applications are more suited to one mode or the other.

Absolute measurements of power (dBm) are usually more accurate in DC detection mode, because the measurement is not subject to variations in source modulation. DC mode is usually a better choice for measuring power out at 1 dB gain compression, for example. In AC mode, power measurements are subject to changes in and square wave duty cycle. In addition, DC mode is more easily referenced to a power meter. In AC mode since the source is square wave modulated, the power meter reading would be nominally 3 dB lower than the scalar analyzer reading. This is not the case in DC mode.

AC mode is the better choice whenever the low levels signals must be detected in the presence of higher level broadband noise. Figure B shows an output return loss measurement where the signal returned from the amplifier is actually at a lower level than the amplifier's broadband noise floor. AC detection rejects the noise and detects the return signal. With DC detection, the noise masks the return signal.

Some amplifiers can be affected by the 27.778 kHz modulation. Some examples are the following

- Amplifiers with Automatic Gain Control (AGC)
- Amplifiers with high gain at very low frequencies (<l MHz)
- Amplifiers with slow responding self bias

The measurement of an amplifier with AGC is shown in Figure C. Note that the function of an AGC is to provide a desired output power over a whole range of input power levels. Figure C shows the measurement made in both AC and DC detection modes. In DC mode, the amplifier input and output are unmodulated. The detector downconverts to a DC level, then chops the signal to form a 27.778 kHz square wave for the receiver. The same measurement in AC mode (RF modulated) shows that the leveling circuit is adversely affected by the modulation. The AGC tries to adjust its gain to track the modulation, but cannot. The resulting square wave is distorted and the scalar analyzer response is degraded. Note that DC detection is the better choice in this application.

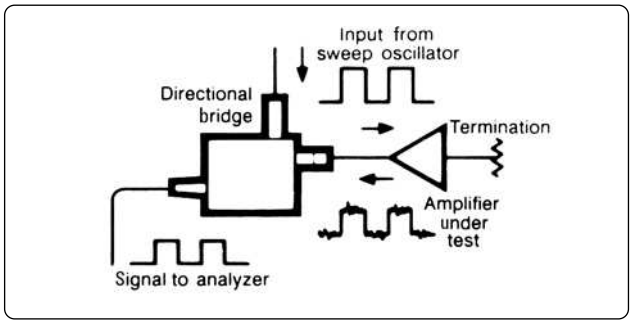

Figure B. AC detection rejects unwanted signals that are unmodulated, such as the RF noise at the amplifier output.

Appendix 1 (cont'd)

AC versus DC detection

If there is any doubt about which detection mode is the better choice in a particular measurement, try both methods and compare the results. The 85025 series detectors can operate in either mode. If there is no significant difference, then the choice may be arbitrary. If there is a difference, evaluate which method is more accurate and make all measurements in that mode.

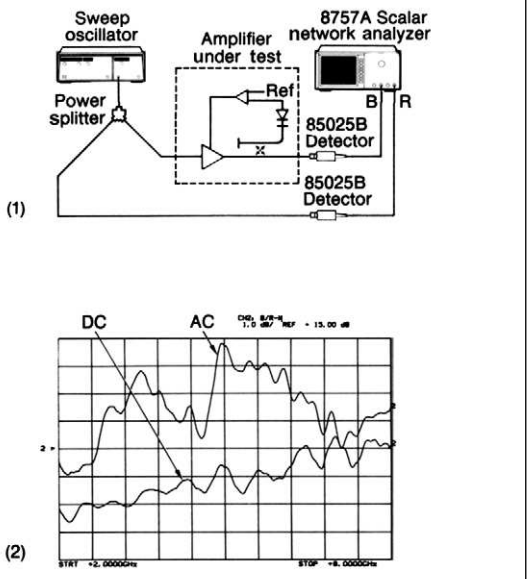

Figure C. Example measurement of amplifier with automatic gain control (AGC) (1) measurement setup and (2) measured gain in AC and DC detection modes. DC detection is better in this application.

Appendix 2

8350B powersweep

All 83500 series RF plug-ins have a power sweep capability that utilizes the internal ALC circuitry of the plug-in to ramp the power out. The ALC dynamic range is determined by the minimum settable power and the maximum leveled output power of the plug-in.

If the plug-in has the optional step attenuator installed (Option 002), then the maximum leveled output power (and therefore, the dynamic range) will decrease due to the insertion loss of the internal attenuator. In addition, this attenuator cannot be switched during a power sweep due to the excessive wear that would be inflicted on the attenuator switches. In normal operation the ALC and attenuator are coupled and the values are automatically set when the power level is entered. However, the two can be decoupled and controlled independently by pressing **[SHIFT][SLOPE]** to set the attenuator value and **[SHIFT][POWER LEVEL]** to set the ALC power level. Decoupling the ALC from the attenuator potentially allows you to use the full range of the ALC circuitry. Changing just the attenuator value (internal and/or external) will not change the ALC level. Changing just the ALC power level will change both the output power level and the ALC range of operation.

Let's look at an example using the 8350B with the 89592A RF plug-in. The ALC dynamic range of this plug-in is –5 dBm to +10 dBm, allowing 15 dB of power sweep range. Assume that we want to sweep power from –21 dBm to –6 dBm. On the 83592A plug-in, press **[POWER LEVEL]** and enter –21 dBm. 20 dB of attenuation is automatically switched in and the low end of the ALC range is set to –1 dBm. Press **[POWER SWEEP]** and enter 15 dB/sweep. The power is now being swept from –21 dBm to –6 dBm, and the ALC is operating from –1 dBm to + 14 dBm. This is not within the allowable –5 dBm to +10 dBm ALC range of the plug-in. To remedy this, decouple the ALC from the attenuator and add a 6 dB external attenuator. Press **[SHIFT] [SLOPE]** and enter 10 dB of attenuation. This, plus the 6 dB of external attenuation, provides 16 dB of attenuation for the system. Press **[SHIFT] [POWER SWEEP]** and enter –5 dBm. The plug-in now operates over the full –5 dBm to + 10 dBm ALC dynamic range.

The same method can be applied to the 8340B or 8341B. The internal step attenuator is standard on both instruments. [SHIFT] [POWER SWEEP] decouples the ALC from the attenuator. "ATTN: -XX dB, ALC: X.XX dBm" appears in the ENTRY DISPLAY. The ALC power level is set with the keypad or knob and the attenuator is set with the step keys. The performance of the synthesized sweeper is optimized when the ALC operates within the range of -20 dBm to +20 dBm. As an example, assume that the 8340B or 8341B has a maximum leveled output power of +10 dBm. This means that the ALC can operate from -20 dBm to +10 dBm (as opposed to –5 dBm to +10 dBm for the 8350B). The synthesized sweeper has 15 dB more dynamic range available as compared to the 8350B. A minimum power sweep range of 20 dB can be achieved in any part of the dynamic range without using any external attenuation.

List of references

Application Note 183, "High Frequency Swept Measurements," literature no. 5952-9200.

Application Note 329, "Performance Characteristics of Microwave Signal Sources," literature no. 5953-8883.

Application Note 326, "Principals of Microwave Connector Care," literature no. 5954-1566.

"Barretter and Diode Comparison For Insertion-Loss Measurements in the Presence of Harmonics," by Fritz K. Weinert, Dr. Bruno 0. Weinschel, and Donald D. Woodruff, Microwave journal, March, 1975, pp. 39-43.
Product Note 8350A-6, "Reduced Harmonic Distortion Using the Integra TMF-1800H Tracking Filter with the 8350 Sweep Oscillator," literature no. 5952-9345. Integra Microwave, Santa Clara, California.

Application Note FT2, "Ferretrac Hands-Off Tracking Filter Reduces Spurious and Harmonic Output Signals from RF Sources." Ferretec, Inc., San Jose, California.

8757A Scalar Network Analyzer Operating Manual, part no. 08757-90034.

8350B Sweep Oscillator Operating and Service Manual, part no. 08350-90034.

Product Note 8350-9, "Improving the output power flatness of the 8350B Sweep Oscillator," literature no. 5954-8344.

Agilent Technologies' Test and Measurement Support, Services, and Assistance

Agilent Technologies aims to maximize the value you receive, while minimizing your risk and problems. We strive to ensure that you get the test and measurement capabilities you paid for and obtain the support you need. Our extensive support resources and services can help you choose the right Agilent products for your applications and apply them successfully. Every instrument and system we sell has a global warranty. Support is available for at least five years beyond the production life of the product. Two concepts underlie Agilent's overall support policy: "Our Promise" and "Your Advantage."

Our Promise

Our Promise means your Agilent test and measurement equipment will meet its advertised performance and functionality. When you are choosing new equipment, we will help you with product information, including realistic performance specifications and practical recommendations from experienced test engineers. When you use Agilent equipment, we can verify that it works properly, help with product operation, and provide basic measurement assistance for the use of specified capabilities, at no extra cost upon request. Many self-help tools are available.

Your Advantage

Your Advantage means that Agilent offers a wide range of additional expert test and measurement services, which you can purchase according to your unique technical and business needs. Solve problems efficiently and gain a competitive edge by contracting with us for calibration, extra-cost upgrades, out-of-warranty repairs, and on-site education and training, as well as design, system integration, project management, and other professional engineering services. Experienced Agilent engineers and technicians worldwide can help you maximize your productivity, optimize the return on investment of your Agilent instruments and systems, and obtain dependable measurement accuracy for the life of those products.

By internet, phone, or fax, get assistance with all your test and measurement needs.

Online assistance:
www.agilent.com/find/assist

Phone or Fax

United States:
(tel) 1 800 452 4844

Canada:
(tel) 1 877 894 4414
(fax) (905) 282-6495

Europe:
(tel) (31 20) 547 2323
(fax) (31 20) 547 2390

Japan:
(tel) (81) 426 56 7832
(fax) (81) 426 56 7840

Latin America:
(tel) (305) 269 7500
(fax) (305) 269 7599

Australia:
(tel) 1 800 629 485
(fax) (61 3) 9210 5947

New Zealand:
(tel) 0 800 738 378
(fax) 64 4 495 8950

Asia Pacific:
(tel) (852) 3197 7777
(fax) (852) 2506 9284

Product specifications and descriptions in this document subject to change without notice.

Copyright © 2001 Agilent Technologies

Printed in USA May 15, 2001
5954-1599

Agilent Technologies