HEWLETT PACKARD

Application Note 339-13

MEASURING THE DIELECTRIC CONSTANT OF SOLID MATERIALS

- HP 4194A Impedance/Gain-Phase Analyzer -

Introduction

Dielectric constant measurements are one of the most popular methods of evaluating solid materials, such as electric insulators and polymers, because dielectric constant measurements can be performed easier than chemical analysis techniques. You can evaluate not only the electrical characteristics, but also the physical characteristics, the structure of elements and their density can be derived from measured dielectric constant information.

This application note gives the theoretical explanation of **Dielectric Constant**, and a method for deriving the dielectric constants of solid materials using the HP 4194A Impedance/Gain-Phase Analyzer.

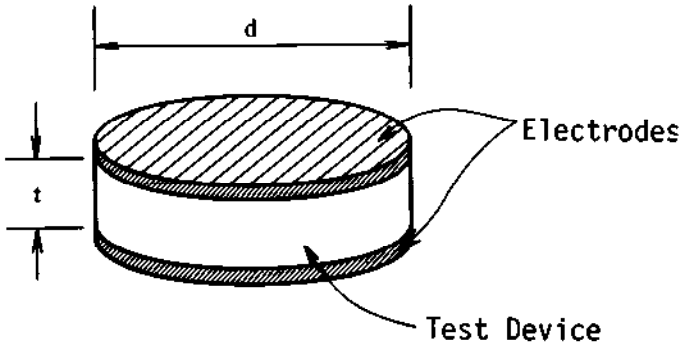

Figure 1. Test Device with Electrodes

Deriving the Dielectric Constant of Solid Materials

Here is theoretical explanation of deriving the dielectric constant of a material based on its measured C-D values. The dielectric constant of solid materials which can be shaped into a disc can be obtained using the following equation (see Figure 1).

$$\epsilon = \epsilon_0 \epsilon_R = \frac{t}{A} C \ [\mathrm{F/m}]$$

$$\epsilon_R = \frac{t \times C}{A \times \epsilon_0} = \frac{t \times C}{\pi \times (d/2)^2 \times \epsilon_0}$$

ϵ : Dielectric constant
ϵ_0 : Dielectric constant of vacuum (= 8.854 $\times 10^{-12}$)
ϵ_R : Relative dielectric constant of test device
t : Thickness of test device [m]
A : Area of face of test device [m^2]
C : Capacitance of test device [F]
d : Diameter of test device [m]

Generally, the relative dielectric constant (ϵ_R) is the main parameter evaluated, and this is what is generally called the " *dielectric constant* ". When the strength of the electric field through a solid material changes, the polarization change lags the electric field change. This phenomenon is called the " *dielectric after effect* ", and can be derived as a function of time as follows:

$$\phi(t) = \frac{1}{\tau} e^{-t/\tau}$$

τ : Dielectric Relaxation Time
t : Time

In this case, the dielectric constant should be modeled in complex form as follows:

$$\epsilon^* = \epsilon' - j\epsilon''$$

$$\epsilon' = \epsilon_R \cos\delta = \frac{t \times C}{A \times \epsilon_0} \times \cos(\tan^{-1} D)$$

$$\epsilon'' = \epsilon_R \sin\delta = \frac{t \times C}{A \times \epsilon_0} \times \sin(\tan^{-1} D)$$

$$\tan\delta = D = \frac{\epsilon_R''}{\epsilon_R'}$$

ϵ^* : Complex dielectric constant
ϵ' : Real part of dielectric constant
ϵ'' : Imaginary part of dielectric constant
$\tan\delta$: Dielectric dissipation factor
D : Dissipation factor of test device

ϵ' and ϵ'' can be obtain using τ:

$$\epsilon' = \epsilon_{R\infty} + (\epsilon_{RO} - \epsilon_{R\infty}) \frac{1}{1 + \omega^2\tau^2}$$

$$\epsilon'' = (\epsilon_{RO} - \epsilon_{R\infty}) \frac{1}{1 + \omega^2\tau^2}$$

(Debye equation)

ϵ_{RO} : Dielectric constant when frequency ≃ 0
$\epsilon_{R\infty}$: Dielectric constant when frequency ≃

This equation shows that ϵ' and ϵ'' are a function of frequency, and this frequency dependent effect is called "*Dielectric Dispersion*". The following equation is derived from the above equation, and the plot of this derived equation is called a Cole-Cole plot (Figure 2):

$$\left(\epsilon' - \frac{\epsilon_{RO} + \epsilon_{R\infty}}{2}\right)^2 + \epsilon''^2 = \left(\frac{\epsilon_{RO} - \epsilon_{R\infty}}{2}\right)^2$$

ϵ_{RO} and ϵ_R are derived from the Cole-Cole plot using the measured value of ϵ' and ϵ''. The Cole-Cole plot is helpful for the physical analysis of organic substances.

The HP 4194A performs accurate measurements of capacitance and **D** (dissipation factor) of test devices by using its compensation function to eliminate errors due to stray admittance and the residual impedances of the test fixture (HP 16034E). By using **ASP** (**A**uto **S**equence **P**rogram), the HP 4194A's internal programming function, the HP 4194A can perform **C-D** measurements, calculation of dielectric constants, and display the frequency characteristics and a Cole-Cole plot simultaneously without using an external computer. You can reduce evaluation time significantly compared to using a bridge.

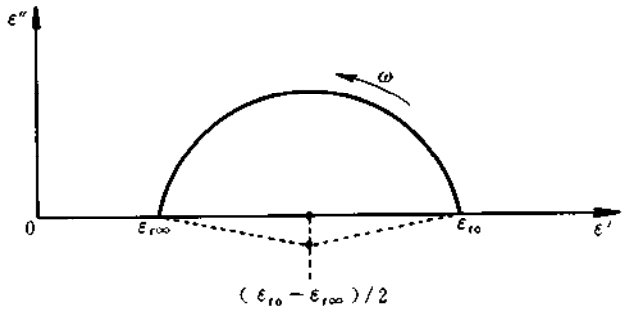

Figure 2. Cole-Cole Plot

Dielectric Constant Measurements using the HP 16034E

The following describes one method of measuring the dielectric constant of solid materials using the HP 4194A with the HP 16034E Test Fixture.

1. Test Device Preparation

The material to be tested should be accurately shaped into a constant thickness disc (as close as possible to a perfect circular shape of constant thickness). The electric field distribution of a disc shaped object is will known and understood, and it is easy to calculate the dielectric constant. The diameter and thickness of the disc must be accurately measured (use a micrometer for these measurements). Take a number of measurements and average them to reduce the dielectric constant measurement error due to the dimensional measurement error.

2. Mount the Test Device on the Fixture

Remove the HP 16034E's Teflon insulator (refer to Figure 3). Connect the HP 16034E test fixture to the HP 4194A's measurement terminals, and carefully perform the Zero OPEN/SHORT compensation. Stable, accurate compensation is required to obtain accurate measurements, especially for tanδ. When performing the SHORT compensation, short the HIGH and LOW contact pins of the HP 16034E completely, and when OPEN compensation is performed, leave a space between the HIGH and LOW contact points equal to the thickness of the material to be tested. Mount the test device between the HIGH and LOW pins of the HP 16034E.

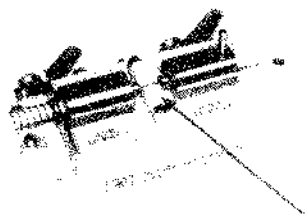

Remove Teflon insulator.

Figure 3. HP 16034E

3. Measurement and Calculations

Measure C_P (parallel capacitance) - D of the test material. This measurement value of C_P includes the edge capacitance which is an additional error factor (Figure 4). The edge capacitance can be calculated as follows: [*1]

$$C_{EDGE} = (0.029 - 0.058 \log t_{CM}) \times \pi \times (d_{CM} + t_{CM})$$

C_{EDGE} : Edge capacitance [pF]

t_{CM} : Thickness of device [cm]

d_{CM} : Diameter of device [cm]

(t >> Thickness of electrode)

The dielectric constant and tanδ are calculated as follows:

$$\epsilon_R = \frac{t \times (C_P - C_{EDGE})}{A \times \epsilon_0}$$

$$\tan\delta = D$$

$$\epsilon_R' = \epsilon_R \times \cos(\mathrm{Tan}^{-1} D)$$

$$\epsilon_R'' = \epsilon_R \times \sin(\mathrm{Tan}^{-1} D)$$

C_P, D = Measured values

Figure 5 shows a sample ASP program listing for dielectric constant measurement, and Figure 6 shows the displayed results (dielectric constant and tanδ of Teflon). This ASP program can also be used to obtain the complex dielectric constant, and produce a Cole-Cole plot for organic substances. Figure 7 and 8 show the frequency characteristics of a complex dielectric constant and a Cole-Cole plot of a polymer.

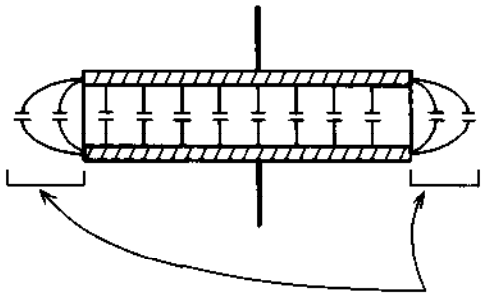

Edge Capacitance

Figure 4. Additional Error Due to Edge Capacitance

```
 10 !DIELECTRIC CONSTANT MEASUREMENT
 20 !          USING HP 16034E
 30 ! ********************************
 40 R0=8.854E-12     ! E0
 50 R3=38E-3         ! DIAMETER OF DEVICE
 60 R1=(R3/2)**2*PI  ! AREA OF DEVICE
 70 R2=3.05E-3       ! THICKNESS OE DEVICE
 80 ! RJ             ! EDGE CAPACITANCE
 90 ! ********************************
100 RST
110 IMP14;SWT2;START=1K;STOP=40M
120 NOP=101;ITM2;NOA=2;CMPN2
130 BEEP
140 Z=0
150 DISP "COMPEN? Y=1 / N=CONT"
160 PAUSE
170 IF Z=1 THEN GOSUB 490
180 OPN1;SHT1
190 BEEP
200 DISP "T(m)? DFT=",R2
210 PAUSE
220 IF Z=0 THEN GOTO 240
230 R2=Z
240 ! ********************************
250 CMT"DIELECTRIC CONSTANT"
260 BEEP
270 DISP "CONNECT DEVICE"
280 PAUSE
290 SWTRG
300 RA=A;RB=B
310 R22=R2*1E-2;R33=R3*1E-2
320 RJ=(.029-.058*LOG(R22))*(PI*(R33+R22))
330 A=(RA-RJ*1E-12)*R2/(R0*R1)
340 UNIT0;AUTO;MKR=1M;6=A
350 DISP "A=D.CONST. / B=TAN.DELTA"
360 BEEP
370 PAUSE
380 ! ********************************
390 CMT"COMPLEX DIELECTRIC CONSTANT"
400 A=6*COS(ATAN(RB));B=6*SIN(ATAN(RB))
410 AUTO;DISP "A=REAL / B=IMAGINALY"
420 BEEP
430 PAUSE
440 ! ********************************
450 CMT"COLE-COLE PLOT"
460 DSP2;AUTO
470 BEEP
480 END
490 ! ********************************
500 ! OPEN/SHORT COMPENSATION
510 ITM3
520 BEEP
530 DISP "OPEN (AT 16034E)"
540 PAUSE
550 ZOPEN
560 BEEP
570 DISP "SHORT (AT 16034E)"
580 PAUSE
590 ZSHRT
600 OPN1;SHT1;ITM2
610 RETURN
```

Figure 5. ASP Program for Dielectric Constant Measurement

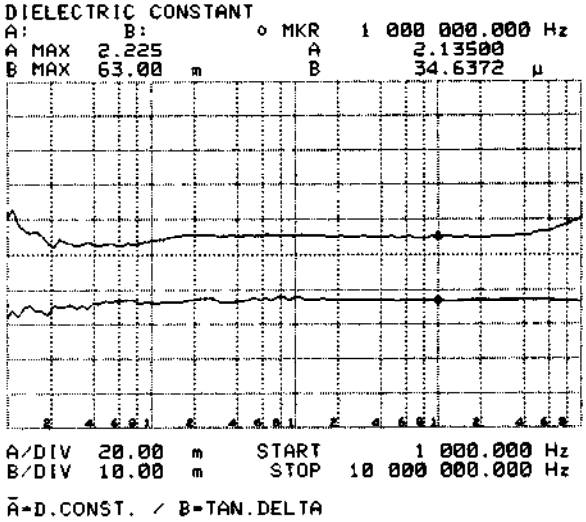

Figure 6. Dielectric Constant and Tanδ of Teflon

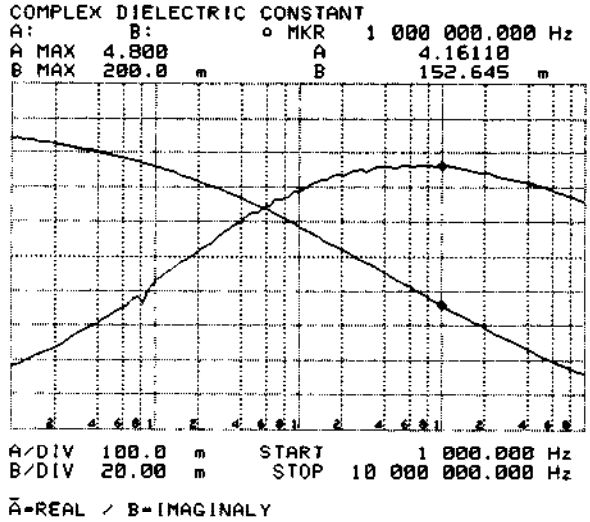

Figure 7. Complex Dielectric Constants of Polymer

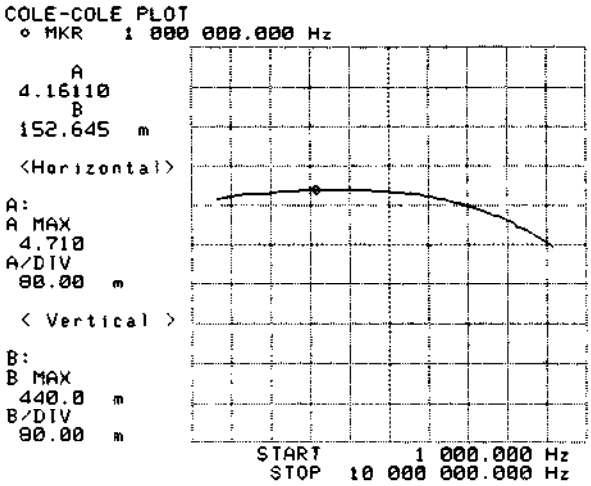

Figure 8. Cole-Cole Plot of Polymer

4. For More Accurate Measurements

- Measurement Frequency Range Using the HP 16034E

The HP 16034E can be used at frequencies up to 40 MHz. However, when measurement frequencies over 1 MHz are used, the incremental error is not negligible, and this is especially true for frequencies over 10 MHz (additional error in capacitance is $\pm 1.5 \times (f\ \text{MHz} \times 10)^2\%$). The practical measurement frequency range when using the HP 16034E for dielectric constant measurement is approximately **10 MHz**.

- **Working Standard for Dielectric Constant Measurements**

It is very difficult to measure dielectric constant and tanδ under the following conditions:

Dielectric constant < 2
Device thickness < 100 μm
tanδ < 0.001

The measurement conditions, including compensation and shielding, can be a source of measurement errors under these conditions. Using a "*Working Standard*" is an effective means of measurement verification under these conditions.

Teflon is a popularly used material for working standards, its dielectric constant is 2, tanδ is less than 0.0002, and its characteristics are not frequency dependent.

- **Size of Test Device**

The maximum test material thickness for measurement using the HP 16034E is 8 mm (refer to Figure 10). The height of the contact points excluding the Teflon insulator is approximately 6 mm, so the appropriate diameter of the test material is approximately 10 mm.

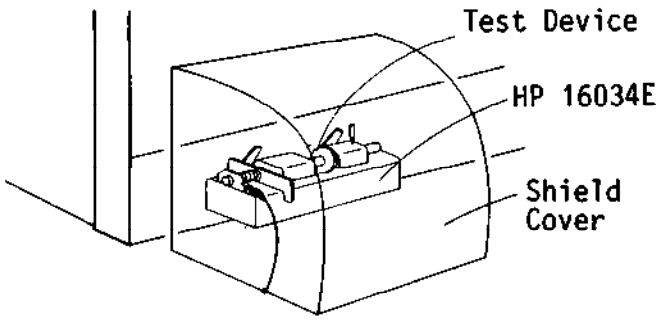

Figure 9. Example Shielding Technique

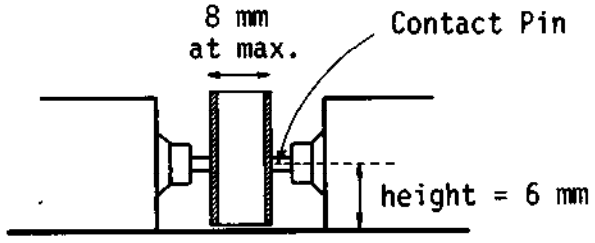

Figure 10. Contact Pins for the HP 16034E

Note: Measuring the dielectric constant of test materials having low dielectric constants and 1 cm in diameter is difficult. Increase the capacitance of the test sample material by decreasing its thickness or by modifying the test fixture to take a larger diameter test sample.

References

* 1 ASTM Standards, D150 Standard Methods for A-C Loss Characteristics and Permittivity (Dielectric Constant) of Solid Electrical Insulating Materials



For more information, call your local HP sales office listed in,the telephone directory white pages. Ask for the Electronic Instrument Department, or write to Hewlett-Packard: **U.S.A.** - P O Box 10301, Palo Alto, CA 94303-0890 **Europe** - Hewlett-Packard S A , P.O. Box 529, 1180 AM Amstelveen, The Netherlands. **Canada** - 6877 Goreway Drive, Mississauga, L4V 1M8. Ontario. **Japan** - Yokogawa-Hewlett-Packard Ltd., 3-29-21, Takaido-Higashi, Suginami-ku, Tokyo 168. **Far East** - Hewlett-Packard Asia Headquarters, 47/F China Resources Building, 26 Harbour Road. Wanchai Hong Kong. **Australasia** - Hewlett-Packard Australia Ltd , 31-41 Joseph Street, Blackburn, Victoria 3130 Australia. **Latin America** - Hewlett-Packard Latin America Headquarters. 3495 Deer Creek Rd., Palo Alto, CA 94304. For all other areas, please write to: Hewlett-Packard Intercontinental Headquarters, 3495 Deer Creek Rd., Palo Alto, CA 94304.

Printed in Japan Dec. 1987 5950-2935