Application Note 283-1

Applications and Measurements of Low Phase Noise Signals Using the 8662A Synthesized Signal Generator

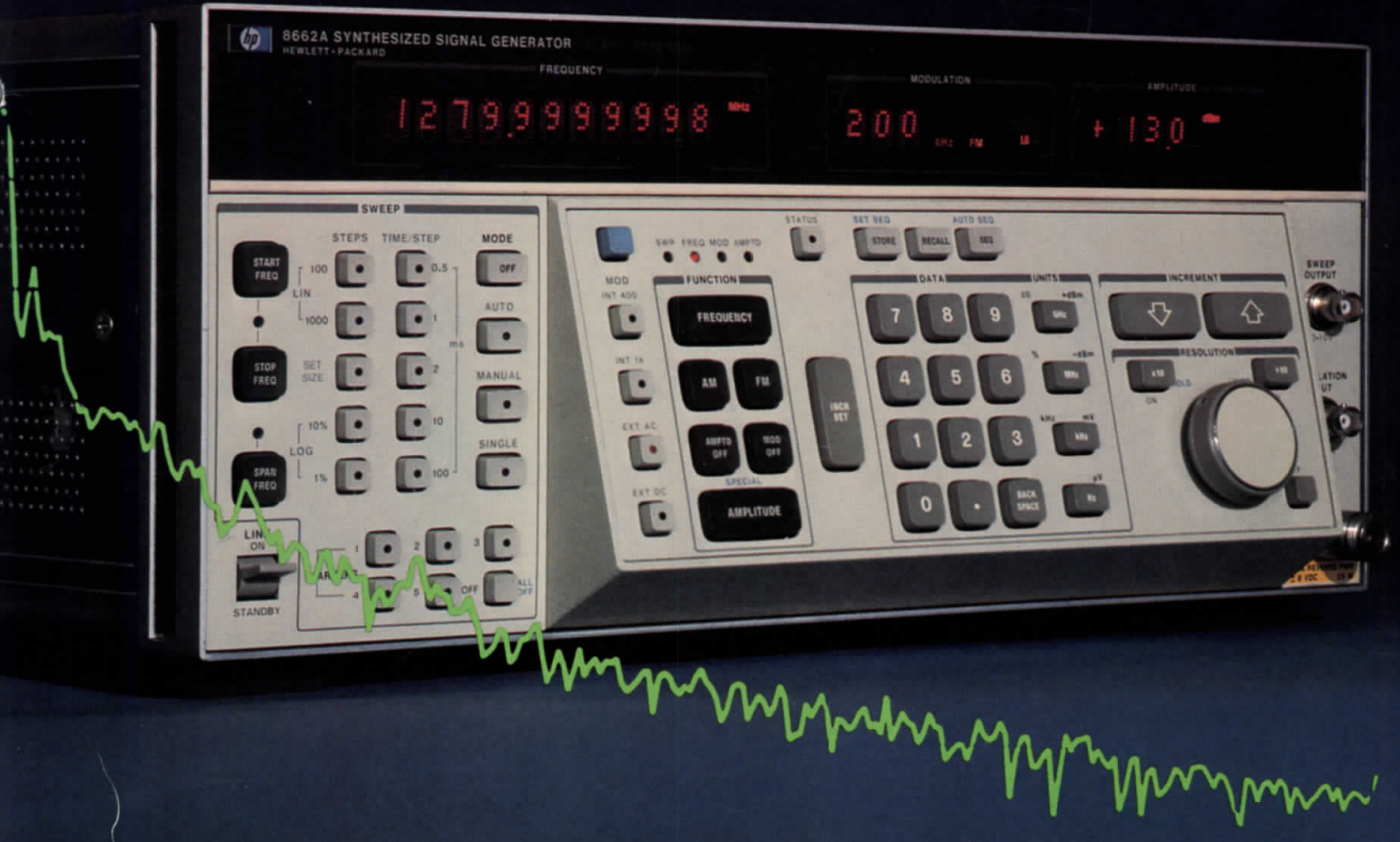

HEWLETT PACKARD

Table of Contents

Chapter 1 **Introduction** 4

Chapter 2 **The Phase Noise Density Spectrum and Its Implications** 5
What is Phase Noise? 5
Residual and absolute phase noise
Why is Phase Noise Important? 6
Local oscillator applications
Doppler radar applications
Out-of-channel receiver testing

Chapter 3 **The 8662A—Designed for Low Phase Noise** 8
Theory of operation
The Reference Section 8
The Phase-Locked Loop Section 9
High frequency loops
Low frequency loops
The Output Section 10

Chapter 4 **Improving Frequency Stability with External References** 11
Why Use an External Reference? 11
Effect of the Reference on Long-Term Stability 11
Effect of the Reference on Short-Term Stability 11
8662A Stability Using a Cesium Beam 12
Effect of an Arbitrary Reference 14

Chapter 5 **SSB Phase Noise Measurement** 15
Common Measurement Methods 15
The Two-Source Technique — Basic Theory 15
The Importance of Quadrature 16
Phase-Locked Measurements 17

Chapter 6 **Measuring SSB Phase Noise with the 8662A** 18
SSB Phase Noise Measurements on Sources Operating from a Common Reference 18
Component Considerations 18
The phase detector
The low-pass filter
The quadrature monitor
The low noise amplifier
The spectrum analyzer
Measurement Procedure 19
Calibration
Setting quadrature
Measurement
Precautions 20
Phase-Locked Measurements Using the 8662A DC FM 20
Phase-Locked Measurement Procedure 21
Calibration
Setting quadrature
Measurement
Comments
Automated SSB Phase Noise Measurements Using the HP-IB 21

Chapter 7 Using the 8662A at Microwave Frequencies 25
Why Use the 8662A at Microwave Frequencies? 25
Effect of Multiplication on the Noise of a Signal 25
8662A Phase Noise Performance at Microwave Frequencies 25
Using the 8662A for Low Noise Microwave Signal Generation 26
Using the 8662A to Make Phase Noise Measurements on Microwave Sources 27
Measurement technique
Measurement procedure
System noise performance
Noise measurements on free-running sources
Measurements on pulsed sources
Automated microwave SSB phase noise measurements using HP-IB
Summary 29

Chapter 8 Voice Grade Receiver Testing with the 8662A 31
Receiver Test Basics: In-Channel and Out-of-Channel Testing 31
Using the 8662A for Adjacent Channel Receiver Tests 32
Using the 8662A for Spurious Attenuation Testing 33

Chapter 9 8662A as an External LO with the HP 8901A Modulation Analyzer 35
Measured Performance 35
Measurement Considerations and Procedure 35

Chapter 10 Using an 8662A with the HP 8505A RF Network Analyzer 37
Measurement Setup 37
Typical Operating Characteristics 37
Frequency characteristics
Range and resolution
Typical system residual FM
Output characteristics
Delay and electrical length characteristics

Chapter 11 Using the 8662A as an Offsettable Source with the HP 5390A Frequency Stablity Analyzer 39

Chapter 12 Using the 8662A as a Substitute LO with the HP 8672A Microwave Synthesized Signal Generator 40
System Operation 40
Hardware Modification 40
System Performance 41
Spectral purity
Resolution
Frequency algorithm
Modulation

Appendix A Calculation of Phase Noise of Three Unknown Sources 44

Appendix B 10 MHz Low Noise Bandpass Amplifier 44

Appendix C Low Noise Amplifier 44

Appendix D References 45

Chapter 1
Introduction

The stringent performance requirements of modern radar and communications systems call for high frequency signals with extremely good spectral purity. In the past the ability to generate such signals and measure their spectral purity has been limited to development laboratories that have elaborate dedicated equipment and abundant time. Today there is a solution to these problems in a single instrument — the Hewlett-Packard 8662A Synthesized Signal Generator. The 8662A combines the low close-in phase noise of a frequency synthesizer with the low spurious and noise floor typically found only in cavity-tuned generators to provide extremely good overall spectral purity.

This application note discusses phase noise in detail in Chapter 2 to provide an understanding of its implications for certain critical applications such as out-of-channel receiver testing, doppler radar, and local oscillator substitution. In Chapter 3, key design aspects of the 8662A and the resulting phase noise performance are presented, followed by a discussion of the effects of external references on that performance in Chapter 4.

Chapters 5 and 6 present techniques of applying the excellent phase noise performance of the 8662A to solve problems that commonly arise in the measurement of low phase noise. Chapter 7 extends these techniques to the microwave frequency range via 8662A-based systems that can generate and measure low phase noise microwave signals.

The effects of signal generator phase noise on receiver testing are discussed in Chapter 8. Finally, the last four chapters present methods of applying the 8662A to enhance the performance of several other Hewlett-Packard instruments.

Chapter 2

The Phase Noise Density Spectrum and Its Implications

What is Phase Noise?

Every RF or microwave signal displays some frequency instability. A complete description of such instability is generally broken into two components, long-term and short-term. Long-term frequency stability, commonly known as frequency drift, describes the amount of variation in signal frequency that occurs over long time periods — hours, days, or even months. Short-term frequency stability refers to the variations that occur over time periods of a few seconds or less. This application note deals primarily with short-term frequency stability.

There are three common methods of specifying short-term frequency stability. The first method, fractional frequency deviation, uses a time domain measurement in which the frequency of the signal is repeatedly measured on a frequency counter, with the time period between each measurement held constant. This allows several calculations of the fractional frequency difference, y, over the time period used. A special variance of these differences, called the Allan variance, can then be calculated. The square root of this variance is called $\sigma(\tau)$, where τ is the time period used in the measurement. The whole process is generally repeated for several different time periods, or τ, and $\sigma(\tau)$ is plotted versus τ as an indication of the signal's short-term frequency stability.

Fractional frequency deviation is especially useful for specifying the level of short-term frequency instabilities occurring over periods of time greater than 10 milliseconds. However, for instabilities occurring at higher rates than this, fractional frequency deviation quickly loses its advantage over other methods of specifying short-term stability.

The second method of specifying short-term frequency stability is called residual FM. This is a frequency domain technique in which the signal of interest is examined using an FM discriminator followed by a filter. The bandwidth of the filter is set at some specified value, usually 300 Hz to 3 kHz, and the rms noise voltage at the filter output is proportional to the frequency deviation in Hz. In this method, only the total amount of short-term frequency instability occurring at rates that fall within the filter bandwidth is indicated. No information regarding the relative weighting of instability rates is conveyed. In addition, the presence of large spurious signals at frequencies near the frequency of the signal under test can greatly exaggerate the measured level of residual FM since such spurious are detected as FM sidebands.

For these reasons, the use of residual FM to specify the short-term stability of a signal generally provides the least amount of information of the three methods in use. An additional disadvantage is that different post-detection bandwidths are specified in different measurement standards. For example, another common choice is 20 Hz to 15 kHz. As a result, quite often comparisons of oscillator performance based on residual FM specifications cannot be made directly.

In the third method of specifying short-term frequency stability — single sideband (SSB) phase noise — the short-term instabilities are measured as low level phase modulation of the signal carrier. Due to the random nature of the instabilities, the phase deviation must be represented by a spectral density distribution plot known as an SSB phase noise plot. Note that the phase modulation of the carrier is actually equivalent to phase modulation by a noise source. Hence the name phase noise.

Of all the methods commonly in use, SSB phase noise has the advantage of providing the most information about the short-term frequency stability of a signal. In addition, both fractional frequency deviation and residual FM may be derived if the phase noise distribution of a signal is known. As a result, SSB phase noise has become the most widely used method of specifying short-term stability. For this reason, the rest of this application note uses only SSB phase noise in specifying short-term frequency stability.

Due to phase noise, in the frequency domain a signal is no longer a discrete spectral line but spreads out over frequencies both above and below the nominal signal frequency in the form of modulation sidebands. Figure 2.1 illustrates the difference between ideal and real signals in the frequency domain. In some cases, phase noise sidebands can actually be viewed and measured directly on a spectrum analyzer. This has led to the common definition of phase noise in which the phase noise level is represented by a function $\mathcal{L}(f)$ called "script L". The U.S. National Bureau of Standards defines $\mathcal{L}(f)$ as the ratio of the power in one sideband, on a per hertz of bandwidth spectral density basis, to the total signal power, at an offset (modulation) frequency f from the carrier. $\mathcal{L}(f)$ is a normalized frequency domain measure of phase fluctuation sidebands expressed as dB relative to the carrier per Hz (dBc/Hz).

$$\mathcal{L}(f) = \frac{\text{Power Density (one phase modulation sideband)}}{\text{Total Signal Power}} \quad \text{dBc/Hz}$$

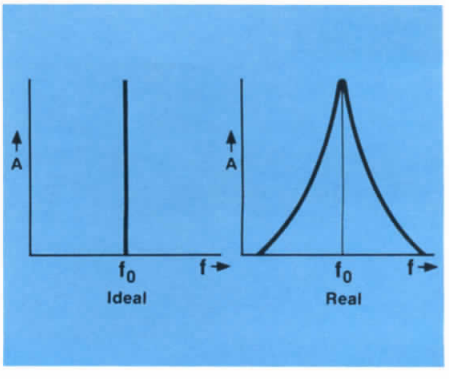

Figure 2.1. CW signal viewed in the frequency domain.

As mentioned, $\mathcal{L}(f)$ can be measured directly on a spectrum analyzer if the following conditions are met:

1. The spectrum analyzer noise floor is lower than the level of phase noise being measured. In most cases this means that the phase noise of the spectrum analyzer's local oscillator must be lower than the level of the noise being measured.
2. The signal's AM noise does not make a significant contribution to the noise measured (determined from the nature of the source under test).

For more information on how to measure phase noise directly on spectrum analyzers, refer to Hewlett-Packard Application Note 270-2, Automated Noise Sideband Measurements Using the HP 8568A Spectrum Analyzer.

Another function frequently encountered in phase noise work is $S\phi(f)$. $S\phi(f)$ is defined as the spectral density distribution of phase deviations in radians squared per Hz. The relationship between $S\phi(f)$ and $\mathcal{L}(f)$ is simply

$$S\phi(f) = 2\,\mathcal{L}(f)$$

This relationship applies when the modulation index of the phase modulation causing the noise is much less than unity. For the levels of phase noise that are typically of concern in modern oscillators, this assumption is generally valid. These two functions, $S\phi(f)$ and $\mathcal{L}(f)$, are discussed further in Chapter 5, where the two-source method of measuring phase noise is described.

Residual and absolute phase noise

There are two kinds of phase noise commonly used in specifying the short-term stability of a device that operates on a signal from a reference oscillator — residual phase noise and absolute phase noise. Residual phase noise refers to that noise inherent in the device, regardless of the noise of the reference oscillator used. Absolute phase noise is the total phase noise present at the device output and is a function of both the reference oscillator noise and the residual phase noise of the device. In general, it is the absolute phase noise that must be considered when applying a device to a given application.

Residual phase noise is commonly used when specifying the noise performance of frequency synthesizers. Although most synthesizers have internal reference oscillators, many synthesizer users prefer to use external references of higher stability to improve the synthesizer performance or to synchronize a system of many instruments. In these cases, the residual noise specification conveys more information than the absolute noise specification, since it allows the user to calculate absolute noise performance from the characteristics of his own reference oscillator. Chapter 4 discusses improvement of the 8662A absolute noise with external references.

Why is Phase Noise Important?

In recent years, advances in radar and communications technology have pushed system performance to levels previously unattainable. Design emphasis on system sensitivity and selectivity has resulted in dramatic improvements in those areas. However, as factors previously limiting system performance have been dealt with, new limitations have emerged upon which attention is being focused. One of these limitations is phase noise. The ability to generate and measure low phase noise RF and microwave signals has become more important than ever before.

Because of its extremely low SSB phase noise, the 8662A allows users to meet these critical phase noise requirements. To illustrate how a low phase noise source such as the 8662A can help achieve better system performance, here are three examples of specific applications.

Local oscillator applications

Phase noise can be a major limiting factor in high performance frequency conversion applications dealing with signals that span a wide dynamic range. The first down-conversion in a high performance superheterodyne receiver serves as a good example for illustration. Suppose that two signals (Figure 2.2a) are present at the input of such a receiver. These signals are to be mixed with a local oscillator signal down to an intermediate frequency (IF) where highly selective IF filters can separate one of the signals for amplification, detection, and baseband processing. If the desired signal is the larger signal, there should be no difficulty in recovering it, if the receiver is correctly designed.

A problem may arise, however, if the desired signal is the smaller of the two, because any phase noise on the local oscillator signal is translated directly to the mixer products. Figures 2.2 b and c show this effect. Notice that the translated noise in the mixer output completely masks the smaller signal. Even though the receiver's IF filtering may be sufficient to remove the larger signal's mixing product, the smaller signal's mixing product is no longer recoverable due to the translated

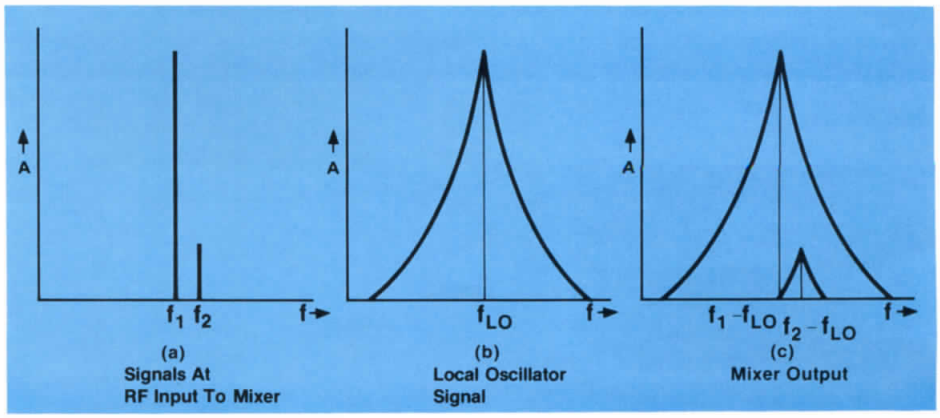

Figure 2.2. Effect of L.O. phase noise in mixer application.

local oscillator noise. This effect is particularly noticeable in receivers of high selectivity and wide dynamic range.

The key point here is that the phase noise level of the local oscillator signal often determines the receiver's performance. A noisy local oscillator signal can degrade a receiver's useful dynamic range as well as its selectivity. To achieve the best performance from a given receiver design, the local oscillator phase noise must be minimized. This is where the 8662A can help. First, the 8662A can provide a low phase noise signal to serve as a reference signal for measuring the phase noise of the local oscillator signal under test. This measurement is described in detail in Chapters 5 and 6. Second, the 8662A can provide the local oscillator signal itself. With +16 dBm typical output power, 0.1 Hz frequency resolution, 420 microsecond frequency switching speed, and full HP-IB programmability, the 8662A can serve in almost any demanding local oscillator application.

Doppler radar applications

Doppler radars determine the velocity of a target by measuring the small doppler shifts in frequency that the return echoes have undergone. Return echoes of targets approaching the radar (closing targets) are shifted higher in frequency than the transmitted carrier, while return echoes of targets moving away from the radar (opening targets) are shifted lower in frequency. Unfortunately, the return signal includes much more than just the target echo. In the case of an airborne radar, the return echo also includes a large "clutter" signal which is basically the unavoidable frequency-shifted echo from the ground. Figure 2.3 shows the typical return frequency spectrum of an airborne pulse doppler radar. In some situations, the ratio of main beam clutter to target signal may be as high as 80 dB. This makes it difficult to separate the target signal from the main beam clutter. The problem is greatly aggravated when the received spectrum has frequency instabilities — high phase noise — caused by either the transmitter oscillator or the receiver LO. Such phase noise on the clutter signal can partially or totally mask the target signal, depending on the relative level of the target signal and its frequency separation from the clutter signal. Recovering the target signal is most difficult when the target is moving slowly and is close to the ground because then the ratio of clutter level to target level is high and the frequency separation between the two is low.

This effect is similar to that in the local oscillator application described in the preceding section. A small signal, the target echo, must be discerned in the presence of the much larger clutter signal that is very close by in frequency. Again, the system performance is limited by phase noise. In this case, it is the phase noise level of either the transmitter oscillator or the receiver local oscillator that is limiting.

The 8662A can improve the radar's performance by serving as a low phase noise source for phase noise measurement or signal substitution. Since most radars operate at microwave frequencies it is usually necessary to multiply the frequency of the 8662A's output to the microwave frequency range. This multiplication is discussed in Chapter 7.

Out-of-channel receiver testing

Modern communications receivers have excellent selectivity and spurious rejection characteristics. These are called the out-of-channel characteristics and require very high quality test signals for verification. Typically, two signal generators are used for testing the out-of-channel characteristics of a receiver. One generator is tuned in-channel, the other is tuned out-of-channel, typically one channel spacing away.

Due to the masking effect described for local oscillator applications, the phase noise of the out-of-channel generator may limit the selectivity that can be measured. As a result, the measured selectivity may be much worse than the actual receiver selectivity. The limiting level of phase noise on the out-of-channel generator is determined by the level of performance of the receiver that is being measured. More selective receivers require lower phase noise on the out-of-channel generator. Out-of-channel receiver testing and the phase noise requirements of the out-of-channel generator are described in more detail in Chapter 8.

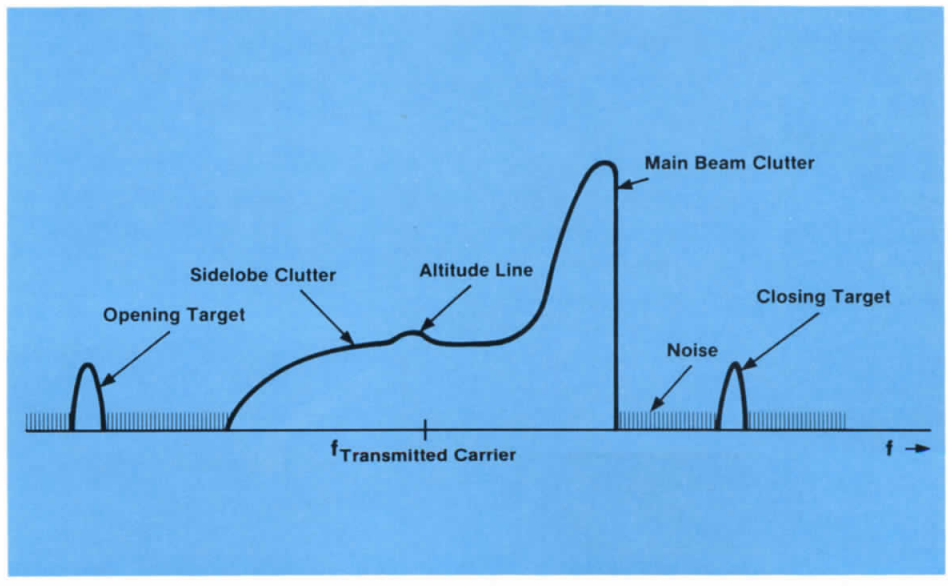

Figure 2.3. Typical return spectrum for airborne doppler radar.

Chapter 3

The 8662A—Designed for Low Phase Noise

The HP 8662A Synthesized Signal Generator offers a superior combination of spectral purity, frequency resolution, and switching speed in a programmable RF signal generator. To understand how the 8662A achieves such performance, it is necessary to examine its basic operation.

Theory of operation

Figure 3.1 shows the basic block diagram of the 8662A. The block diagram can be divided into three main sections: the reference section, the phase-locked loop section, and the output section. The reference section synthesizes many different frequencies from a high-stability 10 MHz quartz oscillator. The phase-locked loop section uses these reference section signals to synthesize output frequencies of 320 to 640 MHz in 0.1 Hz steps. The output section modulates and amplifies the output signal from the phase-locked loop section and translates its frequency to the desired output frequency if it does not lie in the main frequency range of 320 to 640 MHz. This frequency translation is done by doubling, dividing, or mixing.

The Reference Section

The main function of the reference section is to provide a synthesized octave band of frequencies from 320 to 640 MHz in 20 MHz steps. The reference section also generates frequencies of 10, 20, 120, and 520 MHz for use as local oscillator signals in the phase-locked loop and output sections. Both the short-term and long-term frequency stability of the signals from the reference section are critical, since these signals are used as a basis for synthesizing the final output signal.

All of the reference section signals are directly synthesized; i.e., they are derived by multiplying, mixing, and dividing from an internal high-stability 10 MHz reference oscillator (HP Model 10811A). As a result, the long-term frequency stability of the 8662A is derived directly from the 10811A and is specified to be less than 5×10^{-10} per day after a 24-hour warmup. As an example of how stable this is, when the 8662A is set for an output frequency of 500 MHz, the frequency will drift no more than a quarter of a hertz per day after the specified warmup!

The frequency accuracy of the 8662A output is also a function of the 10811A internal reference oscillator. The reference frequency can be adjusted over a range of about 20 Hz to allow close calibration against a standard. For most applications, the accuracy of the internal reference is adequate. If greater accuracy is required, provision has been made in the 8662A to substitute an external 5 or 10 MHz reference for the internal reference. A cesium or rubidium standard used as an external reference can provide frequency accuracies on the order of one part in 10^{11}. Such an atomic standard may also provide improved phase noise at some offsets compared to the internal reference. The use of external references with the 8662A is discussed in Chapter 4.

The short-term frequency stability or phase noise of the 10811A also affects the phase noise on the 8662A output signal. Although the 10811A internal reference has very low inherent phase noise, as its frequency is multiplied up to produce the higher frequency reference section signals the phase noise also increases at a rate of 6 dB/octave. To reduce this effect, monolithic crystal filters in the reference multiplier chain at 40 and 160 MHz filter the noise sidebands at offsets greater than about 4 kHz (6 kHz BW at 40 MHz) and 10 kHz (18 kHz BW at 160 MHz). The resulting phase noise of the reference section output at 500 MHz is typically −110 dBc (dB relative to the carrier) at a 10 Hz offset decreasing to a noise floor of about −148 dBc at offsets greater than 10 kHz.

The mechanical configuration of the crystal filters is very critical, since any small mechanical vibrations in the filter translate directly into microphonic spurious sidebands on the signal. The most common source of instrument vibration is the cooling fan, which causes spurious signals at about 53 Hz offsets. This spurious mechanism is minimized in the 8662A by a special shock mounting arrangement which mechanically isolates the crystal filters from instrument vibration.

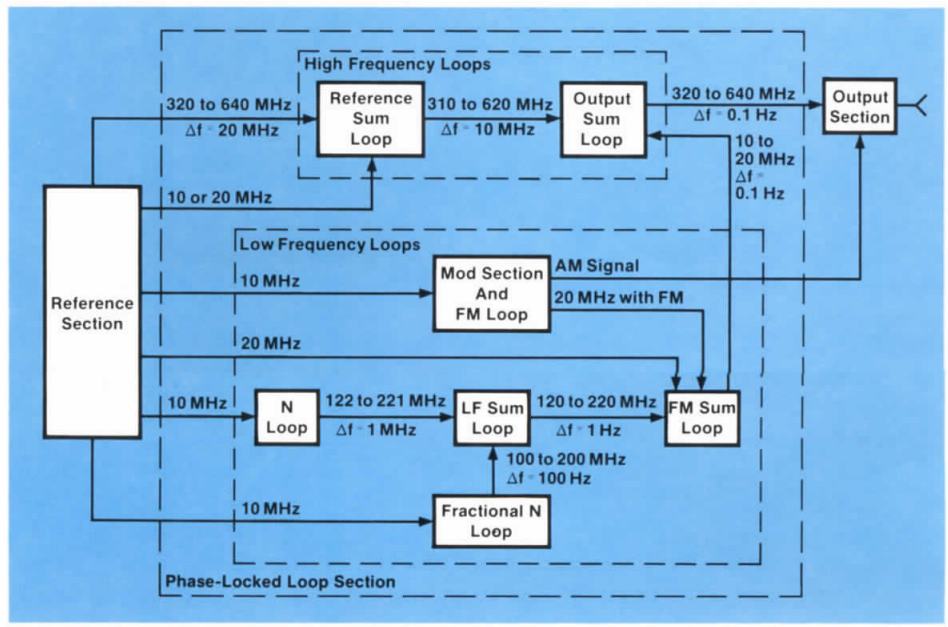

Figure 3.1. 8662A block diagram.

The Phase-Locked Loop Section

The phase-locked loop section consists of seven phase-locked loops that provide the frequency programmability, frequency modulation, and fine frequency resolution of the 8662A without compromising the excellent frequency stability provided by the reference section. Using an indirect synthesis technique (i.e., synthesis using phase-locked loops as contrasted with direct synthesis by mixing, multiplying, or dividing as is done in the reference section), the phase-locked loop section takes the 320 to 640 MHz in 20 MHz steps from the reference section and synthesizes an output of 320 to 640 MHz in 0.1 Hz steps.

The phase-locked loop section is divided into two areas, the high frequency loops and the low frequency loops. The two high frequency loops are nearly identical with specially designed low noise voltage controlled oscillators (VCOs). The low frequency loops consist of five phase-locked loops; three that provide the 8662A's 0.1 Hz frequency resolution and two which generate frequency modulation and sum the resulting FM signal with the final output signal.

High frequency loops

The first of the two high frequency loops, the reference sum loop, tunes over a 310 to 620 MHz frequency range. This loop sums the reference section's main output of 320 to 640 MHz with 10 or 20 MHz also from the reference section. The reference sum loop's primary function is to filter out spurious signals on the reference section output and to improve the resolution from 20 MHz steps to 10 MHz steps. The loop provides 60 dB of spectral filtering, thereby reducing the spurious level from −40 dBc to −100 dBc. Such filtering is an advantage of indirect synthesis, since the bandwidth of the phase-locked loop can be set so that the loop VCO will only track the loop reference signal within the bandwidth of the loop. Reference signal sidebands falling outside the loop bandwidth are therefore filtered by the loop.

The second high frequency loop is the output sum loop. This loop sums the 310 to 620 MHz output of the reference sum loop with a 10 to 20 MHz signal from the low frequency loops. This 10 to 20 MHz signal has a resolution of 0.1 Hz and is frequency modulated when FM is enabled. The resulting output from the output sum loop is 320 to 640 MHz in 0.1 Hz steps. This signal is sent to the output section for translation to the final 8662A output frequency and amplitude modulation.

The reference sum loop and the output sum loop are nearly identical, since they both contain identical, specially-designed low-noise VCOs. These VCOs employ a switched reactance resonator of novel design (Figure 3.2). The resonator consists of an array of five inductors switched in a binary sequence to provide 32 frequency steps. Thus, for continuous frequency coverage of 320 to 640 MHz, the varactor has to tune over only 10 MHz spans. Compared to a conventional VCO with a varactor covering the entire 320 to 640 MHz frequency range, this switched scheme results in greatly reduced oscillator tuning sensitivity. Therefore, any noise on the VCO tuning line causes very little phase noise as compared with a conventional VCO. In addition, the nature of the resonator yields very high signal levels (±10 volts peak), high Q (150-250), fast switching, and precise pretuning.

These properties of the VCOs result in excellent phase noise performance combined with fast frequency switching. The actual phase noise of the VCO is shown in Figure 3.3. The noise at offsets beyond about 100 kHz is particularly important since this noise will not be filtered by the action of the phase-locked loop as much as the noise closer in.

Several important considerations were taken into account in the design of the loops that phase-lock these VCOs. Using the reference sum loop as an example, to get the lowest overall phase noise possible the loop bandwidth was selected to minimize the noise contributions of both the VCO and the reference section. The special efforts made to lower the noise in the reference section allowed a relatively wide bandwidth (250 to 450 kHz) to be used. A direct consequence of wide bandwidth is faster frequency switching. As a result, the reference sum loop can switch frequency in about 50 microseconds. This is particularly sigificant considering the overall phase noise of the reference sum loop shown in Figure 3.4. The loop achieves a noise floor of −143 dBc as close to the carrier as 10 kHz. Within 10 kHz, the reference section noise dominates.

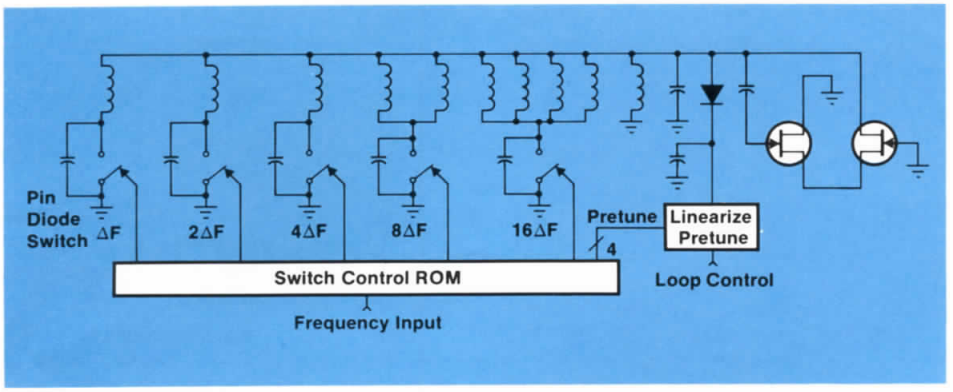

Figure 3.2. 320 to 640 MHz switched reactance oscillator.

Low frequency loops

Careful design in the low frequency loops optimizes the tradeoffs between the resolution, switching speed, and phase noise of the 10 to 20 MHz signal from these loops. Fractional N techniques similar to those used in lower frequency HP Synthesizers (Models 3325A and 3335A) are used in both the "N Loop" and the "Fractional N Loop". In the N Loop, an uncorrected fractional N technique achieves 1 MHz resolution while minimizing the multiplication of phase noise by using a low divide number. The Fractional N Loop uses a corrected fractional

N technique to achieve 0.1 Hz resolution with a relatively low spurious content. This loop is the primary determinant of the overall frequency switching speed of the 8662A. It has a settling time of about 400 microseconds.

The overall phase noise of the 10 to 20 MHz low frequency loop is about −145 dBc at a 10 kHz offset. As a result, when this signal is combined with the output of the reference sum loop in the output sum loop, the phase noise of the resulting signal is about −139 dBc at a 10 kHz offset.

The Output Section

The output section translates the 320 to 640 MHz signal from the phase-locked loop section to the desired 8662A output frequency by doubling, dividing, or mixing. This process produces five distinct frequency bands covering the entire 8662A output frequency range from 10 kHz to 1280 MHz. These are the main band (320 to 640 MHz), the doubled band (640 to 1280 MHz), the divide-by-two band (160 to 320 MHz), the divide-by-four band (120 to 160 MHz), and the heterodyne band (0.01 to 120 MHz). The ways in which these five bands are derived determine the short-term stability characteristics of each band. For example, since frequency doubling results in a 6 dB increase in phase noise, the phase noise of the 8662A output in the doubled band should be about 6 dB higher than that in the main band. Likewise, the phase noise in the divide-by-two and divide-by-four bands should be about 6 and 12 dB lower. The phase noise in the heterodyne band should be about the same as in the main band, except that some noise cancellation may occur close to the carrier due to cancellation of correlated reference section noise in the down-conversion process.

The actual residual phase noise of the 8662A over its entire output frequency range is shown in Table 3.1. Note how closely the actual correlate with the expected values. This close correlation results from careful design in all parts of the output section. Areas of particular concern included designing the AGC loop for minimum AM-to-PM noise conversion and obtaining carefully controlled levels at the inputs to the heterodyne band mixer. The resulting broadband noise floor of the 8662A is less than −148 dBc at offsets greater than 1 MHz.

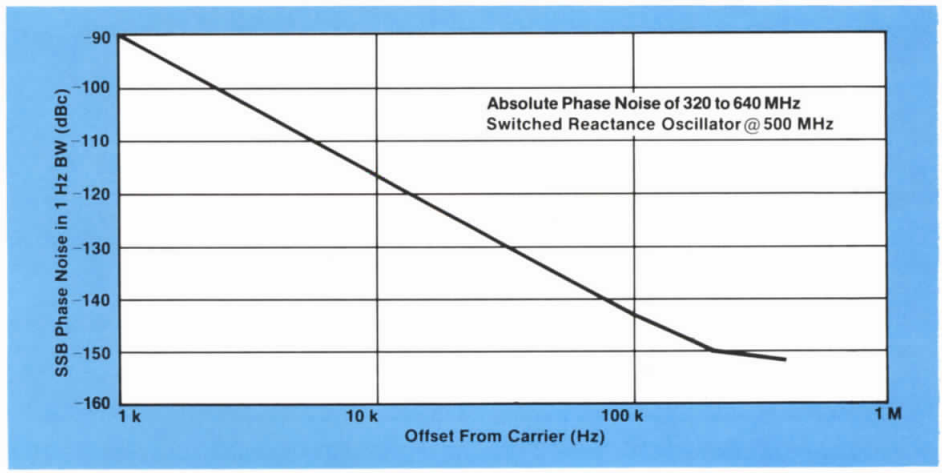

Figure 3.3. Typical phase noise of 8662A switched reactance oscillator.

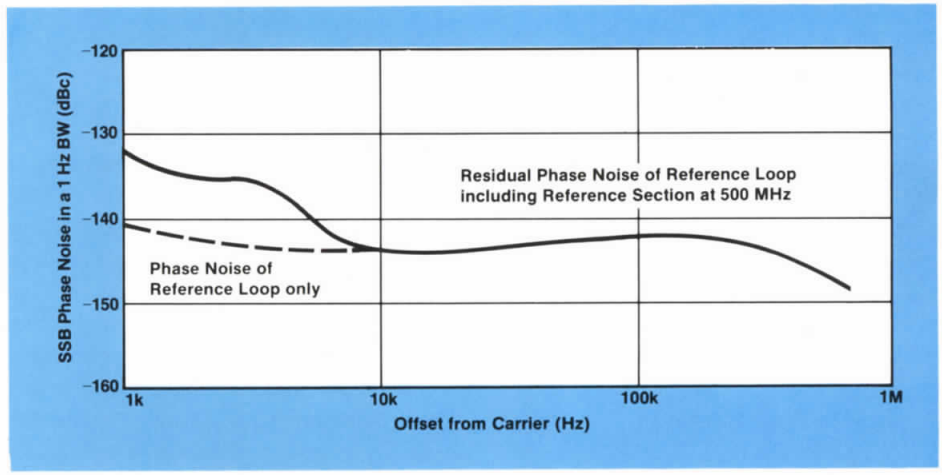

Figure 3.4. Typical phase noise of 8662A reference loop.

Offset from Carrier	Carrier Frequency				
	0.01 to 120 MHz	120 to 160 MHz	160 to 320 MHz	320 to 640 MHz	640 to 1280 MHz
10 Hz	−115	−119	−113	−107	−103
100 Hz	−126	−128	−124	−117	−112
1 kHz	−133	−138	−134	−128	−123
10 kHz	−137	−147	−143	−136	−131
100 kHz	−137	−145	−143	−136	−131

Table 3.1. Typical 8662A residual SSB phase noise.

Chapter 4

Improving Frequency Stability with External References

A synthesizer is defined as a signal source in which all output frequencies are derived from a single fixed-frequency reference oscillator, where the long and short-term stability of the reference is translated to the output. This chapter examines how the stability parameters of the reference oscillator affect the stability of the output frequency of the 8662A. The first part of the chapter shows how the long and short-term stability of the 8662A's own internal reference are translated to the output signal. Then the chapter describes a specific case of using a cesium beam as an external reference to improve both the close-in short-term stability as well as the long-term stability of the 8662A. This specific case is then used to develop the general case of how an arbitrary external reference will alter the 8662A's stability parameters.

Why Use an External Reference?

The internal reference in the 8662A is a Hewlett-Packard Model 10811A 10 MHz Crystal Oscillator. The specified absolute phase noise and long-term frequency stability of the 8662A apply only with this internal reference. Often, however, an external reference is used. (The 8662A accepts any external 5 MHz standard at a level of 1 V_{rms} ±0.1V or any 10 MHz reference at a level of 0.5 to 0.7 V_{rms} into 50 ohms.) For example, in a system it is often desirable to operate all the components of the system from the same reference. If another reference in the system is chosen as the common reference, the long and short-term stability of the 8662A will be altered. Since the use of an external reference does alter these frequency stability parameters, an external reference can be used to improve them.

Effect of the Reference on Long-Term Stability

Frequency stability can be defined as the degree to which the oscillating source produces the same value of frequency throughout a specified period of time. This definition of frequency stability includes the concepts of random noise, residual and incidental modulation, and any other fluctuations of the output frequency.

Long-term stability, often called frequency drift, refers to the change in output frequency over a period of time usually greater than a few seconds. For synthesizers, it is commonly expressed in parts in 10^x per day, week, month, or year. Long-term stability usually results from aging of the components and material used in the oscillating source.

For the 8662A, the relationship between the long-term stability of the reference and the long-term stability of the output frequency is simple. Because of the nature of the synthesis process, the frequency drift and accuracy of the output signal is exactly equal to that of the reference, whether it is internal or external.

The internal reference in the 8662A, the HP 10811A, is an oven-controlled crystal oscillator with specified long-term stability of 5×10^{-10} per day after a 24-hour warmup. The frequency accuracy is a function of time base calibration ± aging rate ± temperature effects ± line voltage effects. These parameters are directly translated to the 8662A output frequency.

If an external reference is used, the 8662A long-term stability can be either degraded or improved. Typical long-term stability for room-temperature crystal oscillators is 1×10^{-6} per month. A secondary standard such as a rubidium has long-term stability on the order of 1×10^{-11} per month. Primary frequency standards such as cesium beams have even less frequency drift — specifying stability on the order of 5 parts in 10^{-12} for the life of the cesium beam tube.

Effect of the Reference on Short-Term Stability

A common measure of short-term frequency stability is single sideband (SSB) phase noise; see Chapter 2 for a discussion of phase noise and its implications. In a synthesizer, usually two types of phase noise are specified —residual and absolute. Residual phase noise is the phase noise inherent in the synthesizer; that is, it is a theoretical limit on the noise performance of the synthesizer. The noise on the output signal can never be better than the residual noise.

Absolute or total noise is the total phase noise present at the device output. Absolute noise includes the noise contribution of the reference used, and changes with different references.

To examine how the noise on the reference oscillator translates to or affects the absolute noise of the 8662A, consider the plot of typical 8662A absolute and residual SSB phase noise (Figure 4.1). Note that the absolute noise with the internal reference is greater than the residual noise only for offsets from the carrier less than about 2 kHz. For offsets greater than 2 kHz, the residual noise is the same as the absolute noise.

The internal reference in the 8662A has specified phase noise as shown in Table 4.1. This phase noise at 10 MHz is translated to the equivalent phase noise at a carrier frequency of 500 MHz and is also plotted on the same graph with the typical phase noise of the 8662A in Figure 4.1.

Table 4.1. Specified phase noise of HP 10811A at 10 MHz.

Offset from Signal f	Phase Noise Ratio $\mathcal{L}(f)$
10 Hz	−90 dBc
100 Hz	−120 dBc
1 kHz	−140 dBc
10 kHz	−157 dBc
100 kHz	−160 dBc

The graph shows that the absolute phase noise of the 8662A closely follows the noise of the reference out to about a 2 kHz offset from the carrier. Beyond a 2 kHz offset, the noise on the 10811A oscillator remains flat, while the absolute noise of the 8662A continues to drop until it reaches the residual noise level. For offsets greater than about 2 kHz, the typical phase noise of the 10811A is actually greater than the typical absolute noise of the 8662A.

The reference section of the 8662A was designed to ensure that this high reference noise at offsets greater than 2 kHz would not contribute to the absolute noise of the output signal; that is, the reference section was designed to improve the broadband noise performance over the noise of the internal reference. In the reference section, the 10 MHz reference signal is directly multiplied up to 640 MHz for use in other parts of the 8662A.

Were nothing else done to this 640 MHz signal, the broadband noise would be translated to the output frequency. However, to improve the broadband noise, monolithic crystal filters were added in the reference multiplier chain at 40 and 160 MHz. The 40 MHz filter has a bandwidth of about 6 kHz; the 160 MHz filter a bandwidth of about 18 kHz. With no filtering, the noise floor on the multiplied-up reference signal (640 MHz) would be about −124 dBc at a 100 kHz offset. The filters, however, effect substantial noise reduction, with about 35 dB of noise attenuation, to reduce the broadband noise floor to about −160 dBc. In addition to the noise reduction effected by the crystal filters, the bandwidths of the phase-lock loops were carefully chosen to minimize broadband noise. However, the major noise reduction is still due to the filtering. For more information on the design of the 8662A and its reference section, see Chapter 3.

In summary, due to the design and filtering of the reference section, the noise of the reference oscillator used primarily affects the close-in rather than the broadband absolute phase noise of the 8662A. The goal is to improve the absolute noise by using lower noise references. Again, by the definition of residual noise, no external reference, no matter how low in noise, could reduce the absolute noise of the 8662A to anything less than the residual noise. If the noise of the external reference is actually lower than the residual noise of the 8662A, the 8662A's residual noise would simply dominate.

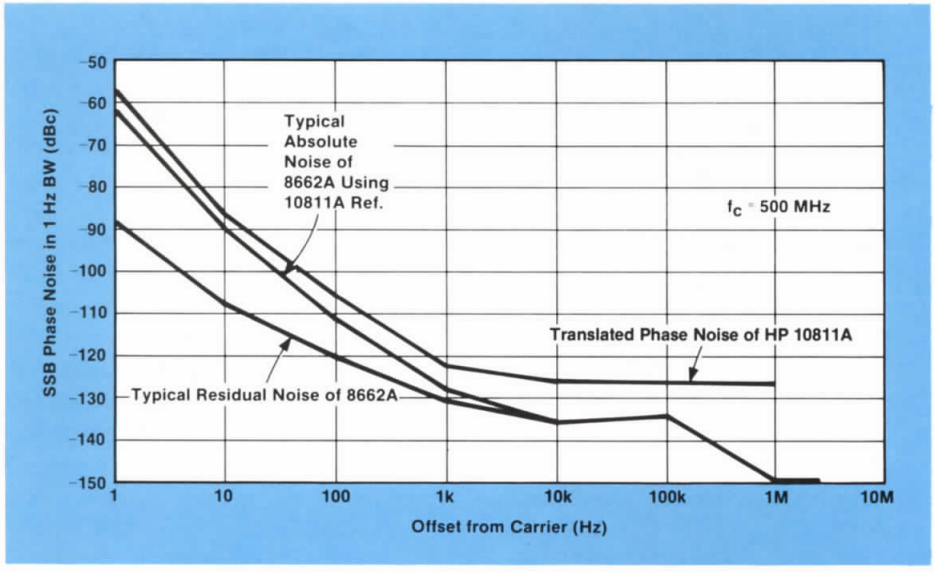

Figure 4.1. Comparison of 8662A noise vs. noise of internal reference.

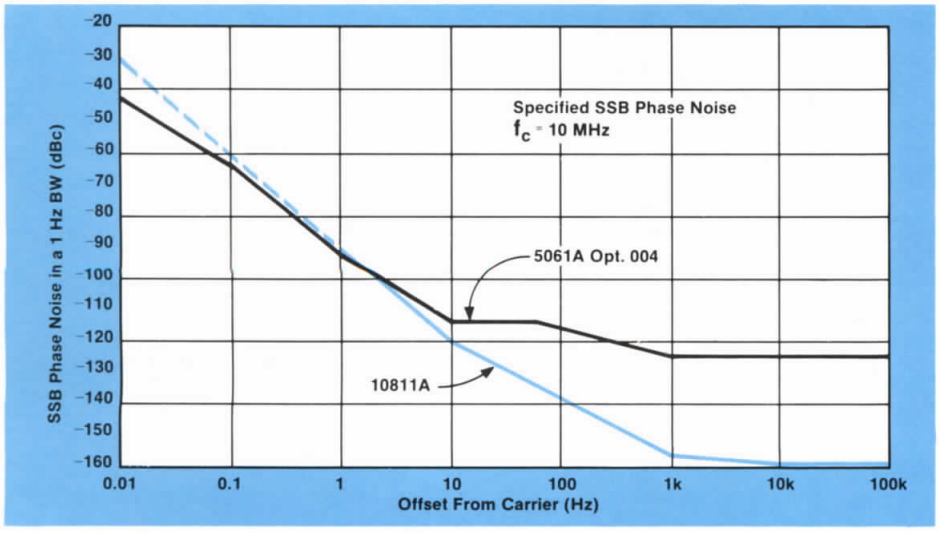

Figure 4.2. Comparison of noise of 10811A crystal vs. 5061A cesium beam.

8662A Stability Using a Cesium Beam

An excellent external reference source for improving the long-term stability of the 8662A is a cesium beam frequency standard. To see how the noise of a cesium standard affects the short-term stability or absolute noise of the 8662A, and to expand that to the general effect of using an external reference, this section will examine the measured absolute noise performance of the 8662A with the Hewlett-Packard Model 5061A Cesium Beam Frequency Standard (with high stability Option 004 for improved phase noise) as an external reference.

A good insight into the expected noise performance of the 8662A with the cesium beam standard as an external reference can be gained by comparing the specified

single sideband phase noise of the 5061A to that of the internal reference, the 10811A. Figure 4.2 plots these noise values, with the noise of the 5 MHz 5061A converted up to the equivalent noise at 10 MHz.

The phase noise of the 10811A Crystal Oscillator is graphed with a dashed line for offsets from the carrier less than 1 Hz because the phase noise of the 10811A is actually specified only into a 1 Hz offset. Phase noise information at offsets greater than 1 Hz is normally sufficient for those applications where a crystal would be used. However, the 10811A does specify time domain stability (fractional frequency deviation) for averaging times from tau equal to 10^{-3} to 10^{2} seconds. These time domain representations of short-term stability were translated to equivalent frequency domain representations for offsets less than 1 Hz by algebraic calculations accepted by the U.S. National Bureau of Standards (NBS). For more information on how to perform these translations, see NBS Technical Note 679, Frequency Domain Stability Measurements: A Tutorial Introduction.

Figure 4.2 shows that the phase noise of the 5061A Cesium Beam is greater than that of the 10811A crystal for offsets from the carrier greater than approximately 2 Hz. Since the bandwidth of the first crystal filter in the 8662A reference section at 40 MHz is approximately 6 kHz, attenuation of this higher noise would not start until about 4 kHz from the carrier. One would therefore expect that the absolute noise of the 8662A with the 5061A as an external reference would be higher than the absolute noise with the internal 10811A at offsets greater than 2 Hz. But because of the filtering and effect of loop bandwidths in the 8662A, this higher reference noise should eventually be attenuated until the residual noise is dominant.

Figure 4.3 shows the absolute phase noise measurement results; the measured absolute phase noise of the 8662A with the 5061A Option 004 Cesium Standard is shown for offsets from 0.1 Hz to 100 kHz. To examine the relationship between the noise of the reference and the resultant absolute noise of the 8662A, the specified phase noise of the cesium standard converted to the equivalent noise at 500 MHz is also plotted. As in the case of the internal reference, close-in to the carrier (here for offsets less than 10 Hz) the absolute phase noise of the 8662A very closely follows the noise spectrum of the reference used. Between 10 Hz and 1 kHz, the absolute phase noise of the 8662A generally follows the noise curve of the cesium reference, except that the noise "plateau" of the cesium is smoothed out by filtering. For offsets greater than 1 kHz, the cesium standard reaches its noise floor. Here the filtering in the 8662A continues to attenuate the reference noise so that the absolute phase noise of the 8662A continues to decrease as offset from the carrier is increased, even though the reference has reached its broadband noise floor.

To show the advantages and disadvantages of using a cesium beam as an external reference, Figure 4.4 compares the

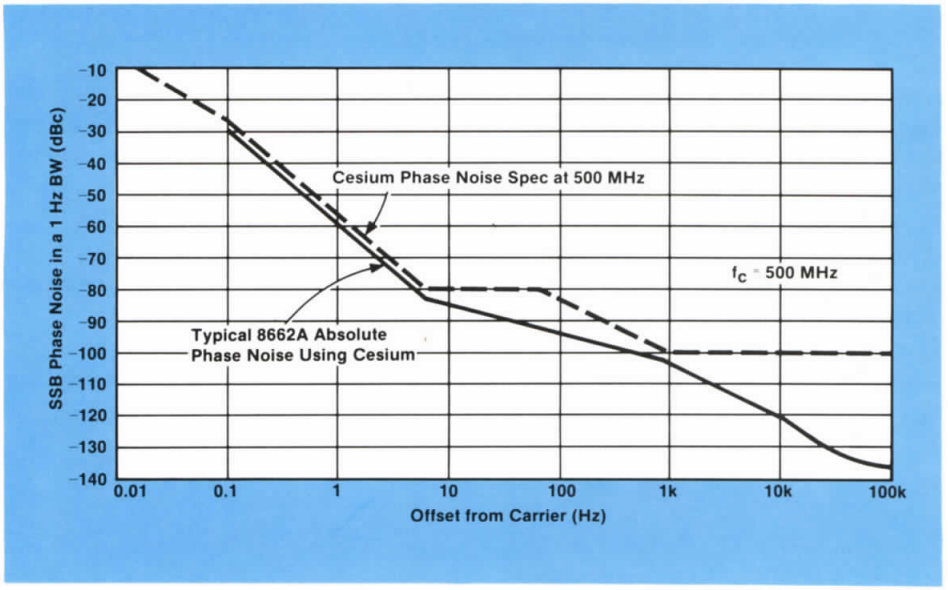

Figure 4.3. Effect of cesium on 8662A absolute noise.

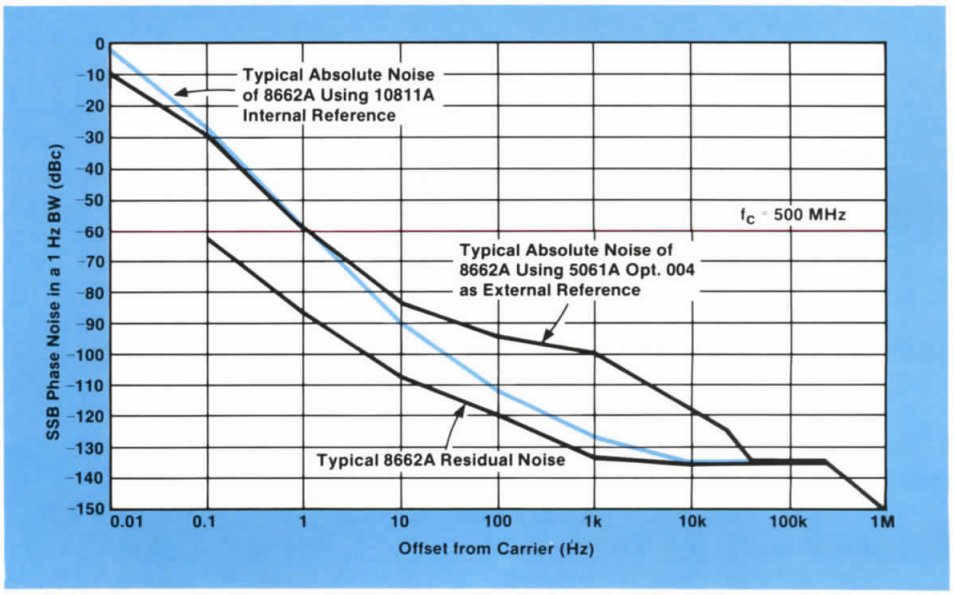

Figure 4.4. 8662A absolute noise comparison.

measured absolute noise of the 8662A with its own internal crystal reference, the absolute noise with the cesium frequency standard, and the typical residual phase noise of the 8662A. Figure 4.2 shows that the noise of the cesium standard is lower than the noise of the internal crystal oscillator for offsets less than about 2 Hz. As expected, this same relationship is translated to the absolute phase noise of the 8662A when these two references are used. The very close-in phase noise (less than 1 Hz offset) of the 8662A is improved with use of the HP 5061A Option 004 Cesium Standard as an external reference, exhibiting greater than 10 dB of improvement at a 0.01 Hz offset, with the amount of improvement increasing as offset from the carrier decreases.

For offsets greater than 2 Hz, the absolute phase noise of the 8662A with the 5061A Option 004 Cesium Standard as a reference is greater than the absolute noise with the internal 10811A Crystal Oscillator, as predicted. The noise with the cesium standard continues to be higher than the noise with the internal crystal until the internal 8662A crystal filters can sufficiently attenuate the cesium's higher reference noise floor to less than the residual noise. Figure 4.4 shows that this reduction occurs at an offset from the carrier of around 25 kHz. This is consistent with the fact that the second crystal filter at 160 MHz has a bandwidth of approximately 18 kHz.

In summary, Figure 4.4 shows that use of an HP 5061A Option 004 Cesium Beam optimizes the very close-in phase noise (less than 1 Hz) of the 8662A. For some applications, this very close-in phase noise is critical. However, if offsets from the carrier from 1 Hz to 100 kHz are of more concern, as in many types of receiver testing, use of the 8662A internal crystal reference provides better performance.

Effect of an Arbitrary Reference

Expanding the results to the general case of any external reference, the close-in phase noise of the reference is translated to the absolute noise of the 8662A output frequency, whether the noise of the external reference is higher or lower than that of the internal crystal oscillator. At greater offsets from the carrier, if the external reference has higher noise than the internal reference, this noise will also be seen as absolute noise, until the 8662A filtering can reduce the reference noise to less than the residual noise. This should normally occur at an offset around 20 to 30 kHz. However, if the reference noise is extremely high, this might occur at a higher offset from the carrier as a function of the frequency response of the second crystal filter.

For the lowest phase noise at all offsets from the carrier, a combination of the absolute noise of the cesium standard at offsets less than 1 Hz and the absolute noise of the internal oscillator, or some other crystal reference, at offsets greater than 1 Hz would be optimal. This optimal solution is technically feasible. One solution is shown in Figure 4.5.

The "lock box" is basically just an external phase-lock loop with the cesium standard acting as the reference oscillator and the crystal oscillator as the voltage-controlled oscillator (VCO). Figure 4.6 shows the lock box in simple block diagram form.

The phase-lock loop locks the crystal VCO to the cesium standard in less than a 1 Hz bandwidth. Within the bandwidth of the loop, the noise at the output of the VCO is equal to the noise on the reference. But outside the bandwidth of the loop, the loop no longer tracks the reference, and the noise of the VCO will be translated to the output.

This "lock box" is commercially available as Hewlett-Packard Model 5061A K34-59991A, with a bandwidth of approximately 0.16 Hz. It can be directly connected to the 10811A external frequency control input.

This arrangement yields the excellent very close-in phase noise of the HP 5061A Option 004 Cesium Beam Frequency Standard, the low phase noise of the HP 10811A Crystal Oscillator at offsets from 1 Hz to 100 kHz, the low broadband noise floor of the 8662A, and the outstanding long-term frequency stability of the cesium beam – $\pm 3 \times 10^{-12}$ for the life of the cesium beam tube.

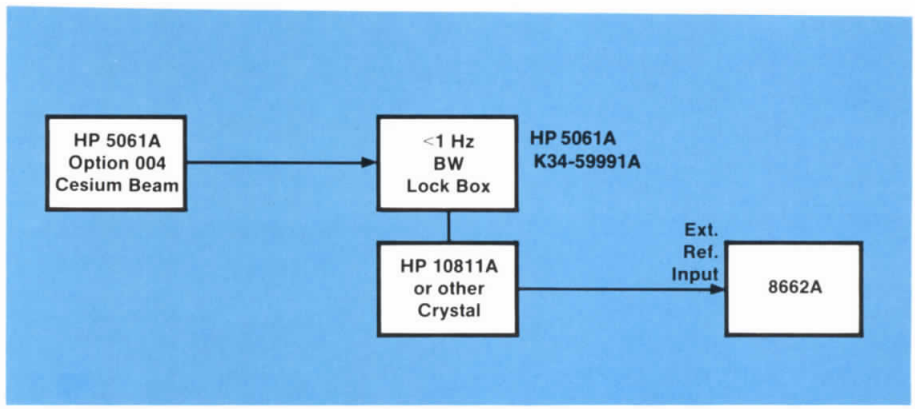

Figure 4.5. Using two references for optimal 8662A phase noise.

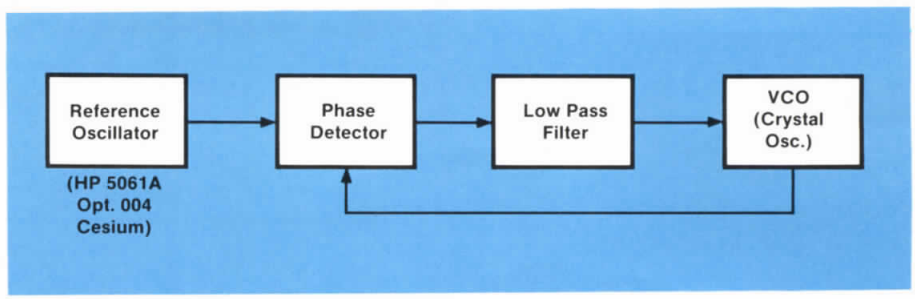

Figure 4.6. Narrowband phase-lock loop for two-reference system.

Chapter 5

SSB Phase Noise Measurement

Common Measurement Methods

There are many methods of measuring SSB phase noise, each of which has its advantages. Here is a summary of the most common methods currently in use:

1. Heterodyne frequency measurement technique. This is a time domain technique in which the signal under test is down-converted to an intermediate frequency and the fractional frequency deviation is measured using a computer-controlled, high-resolution frequency counter. $\sigma(\tau)$ is then calculated (see Chapter 2), and the computer transforms the time domain information to equivalent values of SSB phase noise. This method is particularly useful for phase noise measurements at offsets less than 100 Hz. The Hewlett-Packard Model 5390A Frequency Stability Analyzer is a complete system for making these measurements. For more information, refer to the 5390A Technical Data Sheet or to Hewlett-Packard Application Note 225, Measuring Phase Spectral Density of Synthesized Signal Sources Exhibiting f^0 and f^{-1} Noise Characteristics with the 5390A Frequency Stability Analyzer.

2. Direct measurement with a spectrum analyzer. This is the frequency domain technique discussed briefly in Chapter 2. This method is limited by the spectrum analyzer's dynamic range, resolution, and LO phase noise. For more information, see Hewlett-Packard Application Note 270-2, Automated Noise Sideband Measurements Using the HP 8568A Spectrum Analzyer.

3. Measurement with a frequency discriminator. In this frequency domain method, the signal under test is fed into a frequency discriminator and the output of the discriminator is monitored on a low frequency spectrum analyzer. The best performance is obtained with a delay line/mixer combination as discriminator. Due to the inherent relationship between frequency modulation and $S\phi$ (f), the noise floor of this kind of system rises rapidly as the carrier under test is approached. The resulting higher noise floor limits the usefulness of this method at smaller carrier offsets.

4. The two-source technique. In this frequency domain method, the signal under test is down-converted to 0 Hz and examined on a low frequency spectrum analyzer. A low noise local oscillator or LO is required for the down-conversion. This the most sensitive and direct method of phase noise measurement. For this reason, and because the 8662A is ideally suited as the low noise LO, the two-source method is explored in great detail in this chapter and the following two chapters. Also see HP Application Note 246-2, Measuring Phase Noise with the 3585A Spectrum Analyzer.

The Two-Source Technique — Basic Theory

The basic measurement setup used for measuring phase noise with the two-source technique is shown in Figure 5.1. In this method, the signal of the source under test is down-converted to 0 Hz or dc by mixing with a reference signal of the same frequency in a double-balanced mixer. The reference signal is set in phase quadrature (90 degrees out of phase) with the signal under test. When this condition of phase quadrature is met, the mixer acts as a phase detector, and the output of the mixer is proportional to the fluctuating phase difference between the inputs. Hence the SSB phase noise characteristics may be determined by examining the mixer output signal on a low frequency spectrum analyzer. The frequency of the noise displayed by the analyzer is equal to the offset from the carrier.

The relationship between the noise measured on the analyzer and $\tilde{\mathcal{L}}(f)$ (Chapter 2) is derived from

$$\Delta\phi_{rms} = \frac{V_{rms}}{K_\phi}$$

where $\Delta\phi_{rms}$ = rms phase deviation of phase noise, V_{rms} = noise level measured on spec trum analyzer, and K_ϕ = phase detector constant = $V_{b\ peak}$. The level of the beat note produced in the calibration is described below. This assumes a sinusoidal beat note and a linearly operating mixer.

$$S_\phi(f) = \frac{V_{rms^2}(\text{in 1 Hz bandwidth})}{(V_{b\ peak})^2} = \frac{V_{rms^2}\ (\text{in 1 Hz bandwidth})}{2\ (V_{b\ rms})^2}$$

$$\mathcal{L}(f) = \frac{S_\phi(f)}{2} = \frac{V_{rms}{}^2(1\text{ Hz bandwidth})}{4\ (V_{b\ rms})^2}$$

This relationship reveals how to calibrate the measurement to obtain $\mathcal{L}(f)$.

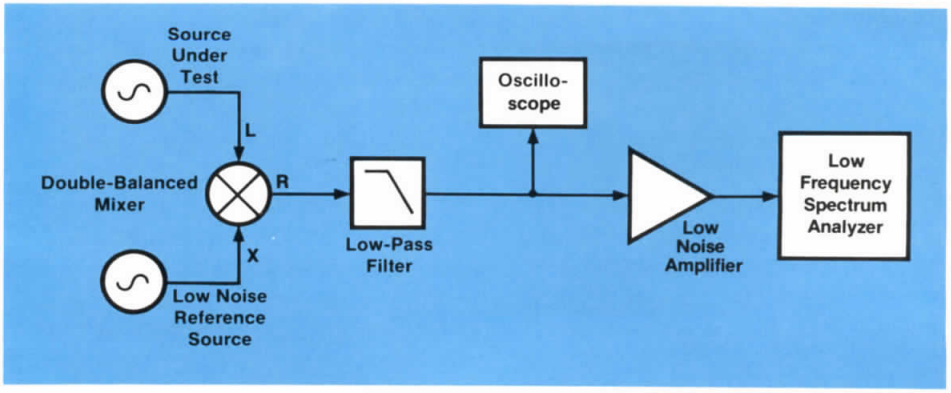

Figure 5.1. Basic two-source phase noise measurement set-up.

First the reference source is offset by a small amount such as 10 kHz to produce a beat note from the mixer that can be measured on the spectrum analyzer ($V_{b\ rms}$). This beat note can be considered as representing the carrier of the signal under test. This carrier reference level is noted, then the reference source is reset to the frequency of the source under test and adjusted for phase quadrature. Quadrature is indicated by zero volts dc as monitored on the oscilloscope. The noise displayed on the spectrum analyzer corresponds to phase noise and the spectrum analyzer's frequency scale corresponds to the carrier offset frequency. To make an SSB phase noise measurement, the level of the noise on the spectrum analyzer is measured referenced to the carrier level noted above ($V_{b\ rms}$). The actual SSB phase noise level is 6 dB below this reading because of the factor of 1/4 in the last equation above.

Another method frequently used to calibrate the two-source measurement is to generate a very low level sideband by either angle modulating one of the two sources at a low level or by summing in a discrete low level signal. If the level of this sideband relative to the carrier is accurately known, the sideband can be used to indicate a certain reference level. The phase noise level can then be measured relative to the sideband reference level. For example, if the sideband is set to −40 dBc and the noise level is 50 dB below the sideband, the SSB phase noise level is −90 dBc. Notice that the 6 dB correction made when using the previous calibration method is not needed with this method because this method does not involve measuring the level of the carrier itself ($V_{b\ rms}$).

The noise measured by the two-source technique described above represents the combined noise of both the source under test and the reference source. Consequently, the phase noise of one of the two sources needs to be known to provide definite data on the other. Usually, the noise performance of the reference source is well characterized for this purpose. The error introduced by the finite noise contribution of the reference source is given by:

$$\text{error (dB)} = 10 \log (1 + P_{ref}/P_{dut})$$

where P_{ref} = actual noise power of the reference source,

P_{dut} = actual noise power of the source under test, and

error is defined as $\mathcal{L}(f)_{measured}$ (in dB) minus $\mathcal{L}(f)_{actual}$ (in dB).

This equation indicates that it is desirable to use as low noise a reference source as possible. For example, if it is known that the reference has about one-tenth as much noise as the source under test, the noise measured using the two-source technique will be within 0.5 dB of the actual noise of the source under test.

Unfortunately, it is usually difficult to obtain reference sources that are much lower in noise than the source under test. Often, the most convenient reference source available is simply another source similar to the source under test. In this case, the assumption can be made that both sources contribute equally to the measured phase noise. Thus the actual phase noise level of the source under test is assumed to be 3 dB lower than (or half of) the measured level. If three unknown sources are available, three measurements with three different source combinations yield sufficient data to calculate accurately the noise of each source. Appendix A gives formulas for this calculation.

Because phase noise is usually specified in a 1 Hz bandwidth, the result obtained from the above measurement must also be corrected for the equivalent noise bandwidth of the spectrum analyzer. This bandwidth normalization process simply requires subtracting 10 log (equivalent noise bandwidth in Hz) from the measured value. For example, if a value of −123 dBc is obtained from a measurement with a spectrum analyzer equivalent noise bandwidth of 1.2 kHz, this value must be corrected by subtracting 10 log (1200), yielding −153.8 dBc/Hz. Most Hewlett-Packard spectrum analyzers have equivalent noise bandwidths of approximately 1.2 times the 3 dB bandwidth of the analyzer. Note that the 3 dB bandwidth of the analyzer is not necessarily equal to the front-panel resolution bandwidth setting, since the front-panel setting is a nominal figure. For best accuracy, the 3 dB bandwidth of the analyzer used should be measured using a synthesized signal generator as a calibrated source.

In addition to the 6 dB, 3 dB, and bandwidth normalization correction factors explained above, other correction factors may be required, depending on the type of spectrum analyzer used. Most analog spectrum analyzers use logarithmic amplifiers and peak detectors. The log amplifier amplifies peaks less than the rest of the noise signal. In addition, even though the spectrum analyzer is calibrated to read rms values, the peak detector tends to produce a reading that is lower than the true rms value when responding to random noise. Due to these effects, the resulting value of noise measured on the spectrum analyzer is about 2.5 dB less than the actual noise level. Thus a correction factor of +2.5 dB must be added to the measured value to compensate for log amplification and peak detection. For further explanation of spectrum analyzer corrections, refer to Hewlett-Packard Application Note 150-4, Spectrum Analysis . . . Noise Measurements.

The Importance of Quadrature

The two-source technique explained above may be applied directly if both sources have sufficient long-term phase stability to stay in phase quadrature for the duration of the phase noise measurement. The importance of quadrature is illustrated by the typical phase detector characteristic curve of a double-balanced mixer shown in Figure 5.2. The curve shows that the point of maximum phase sensitivity and the center of the region of most linear operation occur where the phase difference between the two inputs ($\phi_{LO} - \phi_{RF}$) is equal to 90 degrees (phase quadrature). Any deviation from quadrature results in a measurement error given by:

error (dB) = 20 log [cos (magnitude of phase deviation from quadrature)],

where error is defined as $\mathcal{L}(f)_{measured}$ in dB minus $\mathcal{L}(f)_{actual}$ in dB. Note that the error in dB is always negative.

Since the phase detector constant K_ϕ can be measured ($K_\phi = V_{b\ peak}$), for a given acceptable measurement error the permissible deviation from zero volts dc of the average mixer output voltage can be calculated using the phase detector

characteristic curve. This is given by:

deviation from zero volts dc =

$$K_\phi \sqrt{1 - 10^{\text{error (dB)}/5}}$$

As an example, suppose $K\phi$ has been measured to be 0.15 volts/radian. If it is desired to keep the measurement error due to deviation from quadrature less than −0.5 dB, the oscilloscope should be monitored during the phase noise measurement to ensure that the average mixer output voltage is within the range of +68 millivolts to −68 millivolts.

The quadrature condition represents not only the point of maximum phase noise sensitivity but also the point of minimum AM noise sensitivity. As the two mixer inputs drift out of quadrature and the phase noise sensitivity decreases, the AM noise sensitivity of the mixer increases. Such increased sensitivity to AM noise may cause an additional measurement error if the source under test has high AM noise. For most low phase noise sources under test, this error is negligible compared to the error caused by decreased phase noise sensitivity.

Phase-Locked Measurements

If the two sources cannot stay sufficiently close to quadrature during the phase noise measurement, a "phase-locked" measurement must be made. This involves phase-locking one of the sources to the other by connecting the mixer output to a frequency control line on one of the sources. This causes that source to track the other source in phase. Thus, if the two sources have been set in phase quadrature, they will remain in quadrature. The bandwidth of the phase-locked loop must be set much lower than the lowest offset at which phase noise is to be measured. This is necessary because the tracking of phase-locked loops attenuates phase noise within the loop bandwidth, and this attenuation causes the phase noise to appear lower than it actually is. An example of a phase-locked phase noise measurement is discussed in Chapter 6.

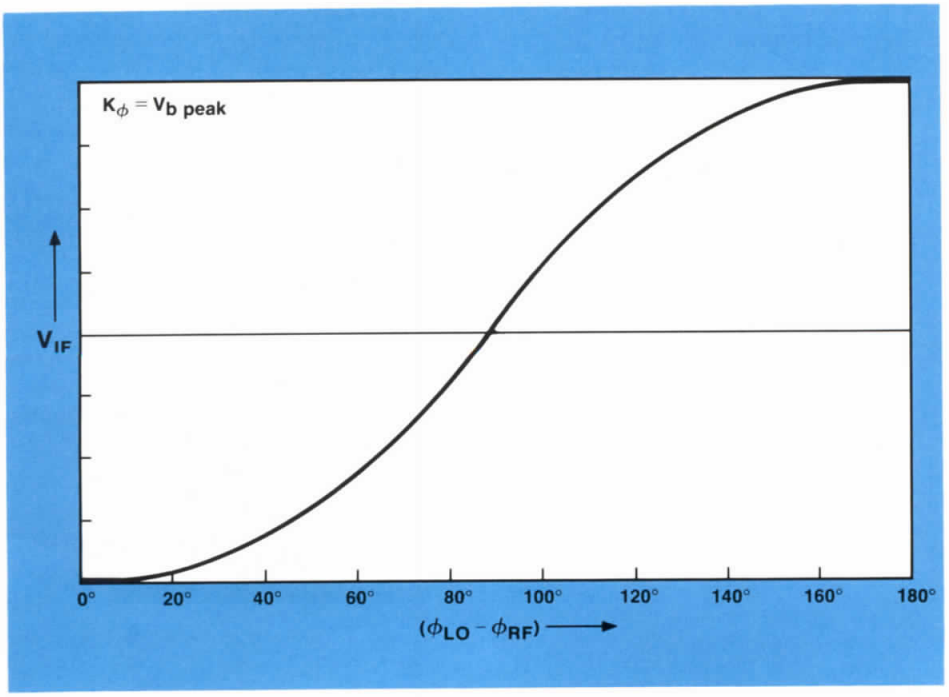

Figure 5.2. Typical double-balanced mixer phase detector characteristic.

Chapter 6

Measuring SSB Phase Noise with the 8662A

The extremely low SSB phase noise and excellent long-term stability of the 8662A allows it to serve in many cases as the low noise reference source required in the two-source technique. The following sections describe the use of the 8662A in measuring SSB phase noise and extend these techniques to include automation via the Hewlett-Packard Instrument Bus (HP-IB). Chapter 7 discusses the use of the 8662A as a low noise reference multiplied up to microwave frequencies for phase noise measurement of microwave sources.

SSB Phase Noise Measurements on Sources Operating from a Common Reference

An 8662A-based system for measuring the SSB phase noise of sources that operate from a 5 or 10 MHz reference oscillator is shown in Figure 6.1. Note that the system uses the basic two-source technique, except that the frequency reference for the device under test, a synthesizer in this example, is the 10 MHz rear-panel reference output of the 8662A. A 5 or 10 MHz external reference oscillator could also be used. Since both sources have the same reference, they remain in phase quadrature once quadrature is set, provided that the source under test has adequate phase stability.

When making a phase noise measurement with this system, it is important to note that any phase noise on the output of the synthesizer under test that is correlated with the noise at the 8662A output will be cancelled in the double-balanced mixer. That portion of the reference oscillator noise that is present at the outputs of both sources correlates if the total signal paths through the two sources introduce the same time delay. Thus, under these conditions, the common reference oscillator noise cancels and the noise measured by the system is equal to the residual noise of the source under test after correction factors for the 8662A residual noise contribution are applied.

Due to the crystal filtering done in the reference section of the 8662A, the absolute 8662A noise is correlated to its reference only at carrier offsets less than about 5 kHz. Thus, this system is limited to residual phase noise measurements at offsets less than 5 kHz and then only if the time delays through the 8662A and the synthesizer under test are equal. Under all other conditions, the noise measured by the system is the absolute noise of the synthesizer under test.

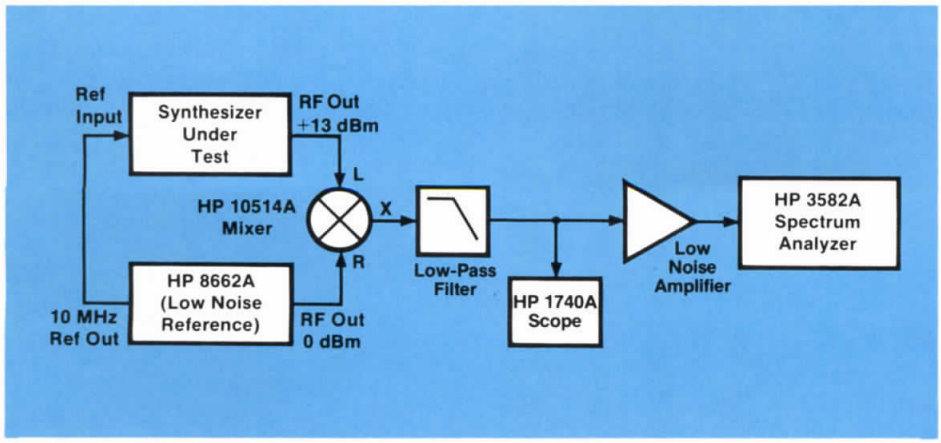

Figure 6.1. Measuring phase noise on sources with a common reference.

The 8662A 10 MHz reference output supplies >0.5 V_{rms} into 50 ohms. If this is insufficient to drive the synthesizer under test, additional amplification may be added provided that care is taken to ensure that the amplifier does not add to the reference oscillator's noise level. A typical 10 MHz amplifier circuit that will give good results is shown in Appendix B. This circuit is similar to that used in the 8662A reference section.

Component Considerations

Because the components in the system of Figure 6.1 are important in determining the system's measurement limits, they are discussed in detail below.

The phase detector

Any linear double-balanced mixer specified for operation at the frequency of the synthesizer under test will serve as a phase detector. Mixers specified for higher levels provide more sensitivity by allowing higher carrier levels and thus increased carrier-to-noise floor ratios. Linear mixer operation is especially important to avoid errors during system calibration. Several excellent mixers for this purpose are available from commercial sources. This system uses a Hewlett-Packard Model 10514A for measurements up to 500 MHz.

The low-pass filter

The low-pass filter prevents LO feedthrough and mixer sum products from overloading the low noise amplifier or the input of the spectrum analyzer. In theory, any general-purpose low-pass network with a cutoff frequency sufficiently above the highest offset frequency of interest may be used. However, many passive types terminate the mixer in a reactive load at RF frequencies. As a result, the mixer sum products are reflected back into the mixer, causing distortion of the phase slope. To avoid this, the low-pass

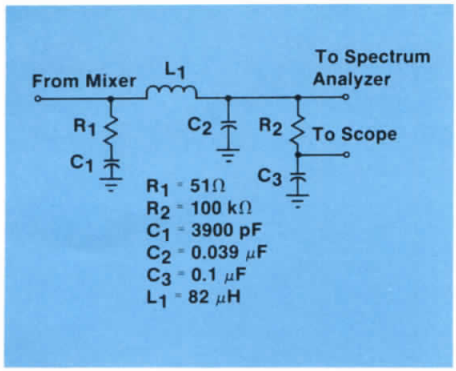

Figure 6.2. Low pass filter for two-source measurement.

filter should be preceded by a simple decoupling network that terminates the mixer in 50 ohms at the sum product frequency (twice the carrier frequency of the signal under test).

Figure 6.2 shows an example of a two-pole, low-pass filter that will correctly terminate the mixer sum frequencies above 10 MHz, yet unload the mixer at the lower frequencies at which the noise voltage fluctuations of interest occur. R1 and C1 terminate the mixer properly. R2 and C3 provide a decoupled means of monitoring quadrature on the oscilloscope without introducing further noise. The values given for L1 and C2 set a 90 kHz cutoff.

The quadrature monitor

Any general-purpose, dc-coupled oscilloscope will do for setting and monitoring quadrature. The Hewlett-Packard 1740A works well for this purpose. Although a dc voltmeter can be used to set and monitor quadrature, an oscilloscope is much more useful for time domain inspection of the phase noise signal. Digital voltmeters have the added disadvantage of introducing noise in very sensitive measurements.

The low noise amplifier

The low noise amplifier (LNA) improves the sensitivity and noise figure of the spectrum analyzer. The requirements of this amplifier are determined by the levels of phase noise to be measured and the dynamic range of the spectrum analyzer. In some instances, the LNA may not be required. However, critically low noise measurements call for this additional amplification. In general, the amplifier should have a low-frequency cutoff well below the lowest offset frequency to be measured. Consideration must also be given to the noise floor and 1/f noise of the amplifier so that additional noise is not introduced into the measurement. The linear input range should extend up to about 30 to 50 dB below the carrier level at the mixer output. The reasons for this constraint are made clear by the system calibration explanation in the following section. A circuit for a typical low noise amplifier that meets these requirements is shown in Appendix C. If the device used (2N6428) is hand selected for low 1/f noise, noise figures as low as 10 dB at 10 Hz may be achieved. This is the LNA used in the system of Figure 6.1.

The spectrum analyzer

The spectrum analyzer should be a high-sensitivity, low-frequency (dc to highest offset measured) analyzer capable of providing narrow resolution bandwidths. Although analog spectrum analyzers are available, the best choice is a digital spectrum analyzer that uses a Fast Fourier Transform technique, allowing measurements very close to the carrier. The Hewlett-Packard Model 3582A shown in Figure 6.1 offers several features that make it useful for phase noise measurements. They are

1) high speed.
2) programmability.
3) rms averaging mode for enhanced noise measurement repeatability.
4) bandwidth normalization allowing noise levels to be read directly in dBV/Hz.
5) relative amplitude values presented directly in dB.
6) digital display with alphanumeric readout of spans, marker frequency, and marker amplitude.

Measurement Procedure

Calibration

The calibration procedure involves measuring the level of the carrier so that the spectrum analyzer can make measurements of phase noise levels relative to that carrier.

1. Set the synthesizer under test to the desired carrier frequency, F_c.

2. Set the 8662A frequency to F_c. Set a frequency increment of 10 kHz. Press INCREMENT UP to generate a 10 kHz beat note for calibration. Set the 8662A amplitude to 0 dBm. Set an amplitude increment of 40 dB. Press INCREMENT DOWN. The attenuation is added to ensure that the low noise amplifier will not be overdriven by the 10 kHz beat note. Here, 40 dB is chosen for illustration. The actual amount of attenuation necessary will vary, depending on the sensitivity required of the measurement, the characteristics of the low noise amplifier, and the output level characteristics of the synthesizer under test.

Note that it makes no difference which source is connected to which mixer input as long as the proper levels are maintained. If the synthesizer under test has sufficient output to drive the LO port of the mixer, it is usually more convenient to connect the 8662A to the RF input, since the 40 dB of attenuation can be added by simply decrementing the 8662A output level by 40 dB. If the 8662A must be used to provide the +13 dBm LO drive level, an external attenuator such as the Hewlett-Packard Model 355D may be used to provide the required attenuation for the test signal at the RF mixer port.

3. Set the 3582A Spectrum Analyzer for a 0 to 25 kHz span, 10 dB/division, Hanning passband shape, averaging off. Enable the marker and set it on the 10 kHz beat note. Set a reference at this carrier level by pressing SET REF. Enter the relative mode by pressing REL. To obtain readings in dBc/Hz, enable the automatic bandwidth normalization by pressing $\div\sqrt{BW}$. Calibration is complete.

Setting quadrature

Quadrature setting consists of offsetting the 8662A frequency by 0.1 Hz until the two sources are in quadrature, then resetting the 8662A frequency to exactly F_c.

4. On the 8662A, press FREQUENCY, INCREMENT DOWN, AMPLITUDE, INCREMENT UP.

5. Set an 8662A frequency increment of 0.1 Hz (0.2 Hz above 640 MHz). Press INCREMENT UP. With the 1740A Oscilloscope set at 0.1 volts/div and dc coupled, monitor the 0.1 Hz beat note on the oscilloscope. As the trace passes through 0 volts dc press INCREMENT DOWN to hold the mixer inputs in quadrature. Note: due to the need for phase-continuous 8662A frequency switching in performing this step, the recommended frequency offset sequence is INCREMENT UP, INCREMENT DOWN rather than the reverse.

Measurement

6. Set the 3582A Spectrum Analyzer to span the desired offset frequency and increase the input sensitivity in 10 dB steps until the "overload" indicator just remains unlit.

7. Place the 3582A in the RMS average mode, select the desired number of averages and press RESTART. As the 3582A takes readings, monitor the 1740A to ensure that the inputs to the mixer remain within the desired limits about quadrature.

8. When the 3582A is finished sweeping, move the marker to the desired offset frequency and note the reading on the screen.

9. Correct the reading taken above by the following correction factors:

minus 40 dB for the attenuation added during calibration

minus 6 dB to convert measured reading to $\mathcal{L}(f)$

minus 3 dB if the equal source assumption is being made.

The resulting number is equal to the SSB phase noise level in dBc/Hz. Notice that the 3582A does not require any of the spectrum analyzer correction factors discussed previously. This is due to its automatic bandwidth normalization feature and digital Fast Fourier Transform operation.

10. If the phase noise at other offsets not currently displayed on the 3582A is required, repeat steps 6 through 9. Generally, recalibration is not necessary, but quadrature may have to be reset from time to time, depending upon the stability of the synthesizer under test.

Precautions

The following potential problems should be considered when making the above measurements.

- Non-linear operation of the mixer can result in calibration error.
- Non-sinusoidal RF signals can cause K_ϕ to deviate from $V_{b\ peak}$, causing calibration error.
- The amplifier or spectrum analyzer input can be saturated during calibration or by high spurious signals such as line frequency multiples.
- Closely spaced spurious may give the appearance of continuous phase noise when spectrum analyzer resolution and averaging is insufficient.
- Impedance interfaces should remain unchanged between calibration and measurement.
- In residual measurement systems, phase noise of the common reference oscillator may be insufficiently cancelled due to delay time differences between the two branches.
- Noise from power supplies can be a dominant contributor to phase noise.
- Peripheral instrumentation such as oscilloscopes, analyzers, counters, and DVMs can inject noise.
- Microphonic noise might excite significant phase noise in devices.

This list of potential problems points out that much care must be exercised when very low SSB phase noise measurements are made. However, if these points are considered carefully, the system of Figure 6.1 will measure SSB phase noise as low as the phase noise level of the 8662A itself (Figure 4.1). Figure 6.3 shows the SSB phase noise of the HP 8660C Synthesized Signal Generator (top) and the 8662A (bottom) as seen on the 3582A Spectrum Analyzer display. Note the flattening effect of displaying phase noise on a linear frequency scale.

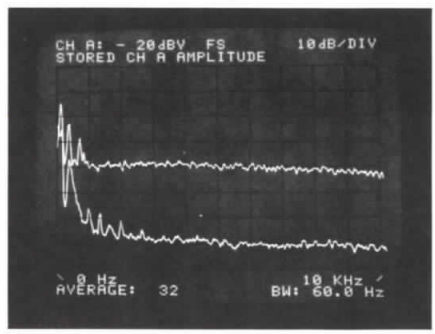

Figure 6-3. Phase-locked two-source phase noise measurement.

Phase-Locked Measurements Using the 8662A DC FM

One of the most common phase noise measurements involves measuring the SSB phase noise of a free-running oscillator using the two-source technique. Since such an oscillator does not operate from a common reference oscillator, phase quadrature must be maintained by phase-locking one of the two sources to the other. To avoid phase noise cancellation by loop tracking, the bandwidth of the phase-locked loop must be much less than the lowest offset frequency of interest. Although it makes no difference which source is phase-locked to which, it is generally most convenient to phase-lock the 8662A used as the low noise reference to the source under test. A system for making phase-locked phase noise measurements using the dc FM capability of the 8662A is shown in Figure 6.4.

The output of the mixer is connected to the dc-coupled FM input of the 8662A. Because the resulting phase-locked loop is essentially first order, the loop bandwidth can be calculated and is given by the formula

$$BW\ f\ (3\ dB) = K_o\ K_\phi$$

where K_o = the 8662A "VCO gain constant", in radian/s/volt, and is just equal to the 8662A front panel FM deviation setting x 2π, and K_ϕ = phase detector constant, in volts/radian ($V_{b\ peak}$) as given in Chapter 5.

When the HP Model 10514A Double-Balanced Mixer is used with input levels of 0 dBm at the RF port and +13 dBm at the LO port, the following rule of thumb applies: phase noise measurements made at carrier offsets greater than or equal to the 8662A front-panel FM peak deviation setting will result in a maximum loop attenuation error of 0.5 dB.

Phase-Locked Measurement Procedure

The procedure for manual phase-locked measurements of absolute phase noise using the system shown in Fgirue 6.4 as follows:

Calibration

The calibration procedure involves measuring the level of the carrier so that the spectrum analyzer can make measurements of phase noise levels relative to that carrier.

1. Set the 8662A frequency to the approximate frequency of the oscillator under test. Press MOD OFF. Set the 8662A amplitude to 0 dBm and set an amplitude increment of 40 dB. Press INCREMENT DOWN. Set a frequency increment of 10 kHz. Press INCREMENT UP.

2. Adjust the 8662A frequency to obtain a beat frequency at the mixer output of approximately 10 kHz.

3. Set the 3582A Spectrum Analyzer for a 0 to 25 kHz span, 10 dB/division, Hanning passband shape, averaging off. Enable the marker and set it on the 10 kHz beat note from the mixer. Set a reference at this carrier level by pressing SET REF. Enter the relative mode by pressing REL. To obtain readings in dBc/Hz, enable the automatic bandwidth normalization by pressing $\div \sqrt{\text{BW}}$. Calibration is complete.

Setting quadrature

The following procedure phase-locks the 8662A to the source under test and adjusts the phase relationship to phase quadrature.

4. On the 8662A press FREQUENCY, INCREMENT DOWN, AMPLITUDE, INCREMENT UP.

5. Set the 8662A FM deviation to 1 kHz. Press EXT DC. Adjust the 8662A frequency slowly until phase-locking is observed on the 1740A. This is indicated by a constant dc level on the scope. Adjust the 8662A frequency until that dc level is equal to 0 volts.

Measurement

6. Set the 3582A Spectrum Analyzer to span the desired offset frequency and increase the input sensitivity in 10 dB steps until the "overload" indicator just remains unlit.

7. Place the 3582A in the RMS average mode, select the desired number of averages, and press RESTART. As the 3582A takes readings, monitor the 1740A to ensure that the inputs to the mixer remain within the desired limits about quadrature.

8. When the 3582A is finished sweeping, move the marker to the desired offset frequency and note the reading on the screen.

9. Correct the reading taken above by applying the following correction factors:

   minus 40 dB for the attenuation during calibration.

   minus 6 dB to convert measured reading to $\mathcal{L}$ (f).

   minus 3 dB if the equal source noise assumption is being made.

The resulting number is equal to the SSB phase noise level in dBc/Hz. Notice that the 3582A does not require any of the spectrum analyzer correction factors discussed in Chapter 5. This is due to its automatic bandwidth normalization feature and digital Fast Fourier Transform operation.

10. If the phase noise at other offsets not currently displayed on the 3582A is required, repeat steps 6 through 9. Generally, recalibration is not necessary, but quadrature may have to be reset from time to time, depending upon the stability of the source under test.

Comments

With very stable sources under test, 8662A FM deviations as small as 0.1 kHz may be used, enabling phase noise measurements to be made as close to the carrier as 100 Hz. In this case, the 3582A Spectrum Analyzer can be placed in the single sweep mode and the trigger can be manually "armed" by the operator as the 8662A frequency is adjusted to maintain quadrature. The averaging feature can still be used, except that the averages must be taken manually.

This system can measure absolute SSB phase noise as low as that of the 8662A in the dc FM mode (Figure 6.5).

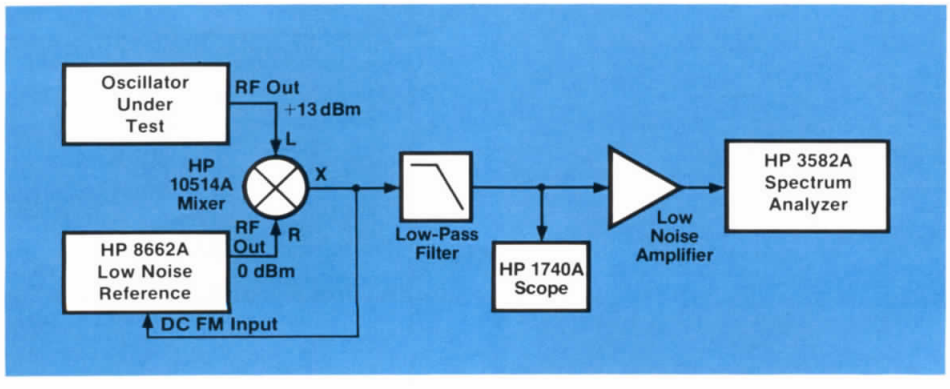

Figure 6.4. Phase-locked two source phase noise measurement.

Automated SSB Phase Noise Measurements Using the HP-IB

Because the 8662A Synthesized Signal Generator and the 3582A Spectrum Analyzer are programmable, the phase noise measurement systems shown in Figures 6.1 and 6.4 can be automated by adding a desktop computer to control the instruments and collect and display data via the Hewlett-Packard Interface Bus (HP-IB). There are many advantages to automating complex measurements such as phase noise measurements, the most obvious being speed. A second advantage lies in the inherent repeatability of automated measurements that results from the elimination of operator error and inconsistency. Still another advantage is apparent in the tremendous data gathering and documentation ability of a desktop computer used in conjunction with a printer, plotter, or CRT display.

An example of an automated system for residual phase noise measurements is shown in Figure 6.6. This system is based on the Hewlett-Packard Model 9825S Desktop Computer. Typical system software written for the 9825S is presented in Figure 6.7. The software flowchart in Figure 6.8 shows that the software structure closely corresponds to the manual measurement procedure described in the preceding section. The routine is entirely automated, except for setting quadrature. To set quadrature, the operator simply presses the computer's CONTINUE key when the scope trace crosses zero volts dc. This step could also be automated with the addition of a fast, programmable digital voltmeter, provided that additional noise is not introduced by the DVM's sampling.

The measurement results are printed out on a Hewlett-Packard Model 9866B printer and plotted as a traditional phase noise curve in dBc versus log frequency on a Hewlett-Packard Model 9872C Plotter. The printing and plotting subroutines may be easily changed to meet individual documentation requirements. In addition, the number of offsets at which phase noise is measured may be changed to provide more information for the graphical output.

As an example of the power of HP-IB automation, refer to the phase noise graph in Figure 6.9. This graph was obtained from the system shown in Figure 6.6 in 2-1/2 minutes including the time to plot and label the graph and represents the residual SSB phase noise of an 8662A Synthesized Signal Generator under test.

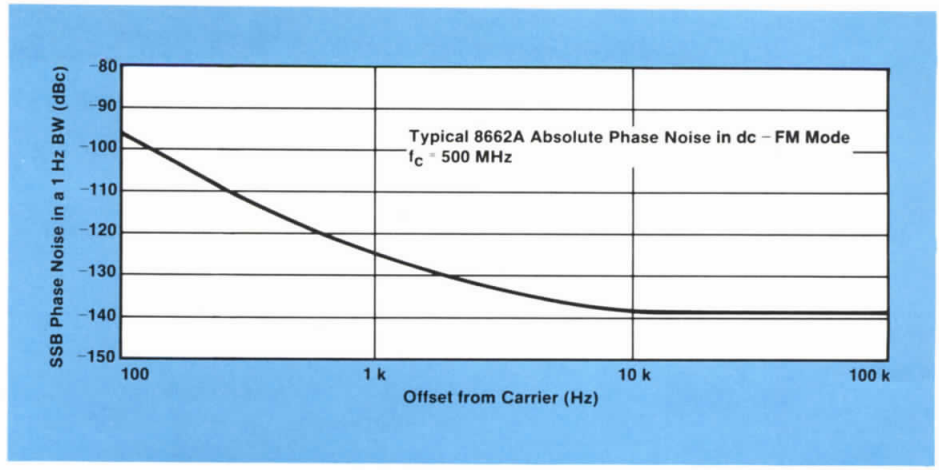

Figure 6.5. Typical 8662A absolute phase noise in dc-FM mode.

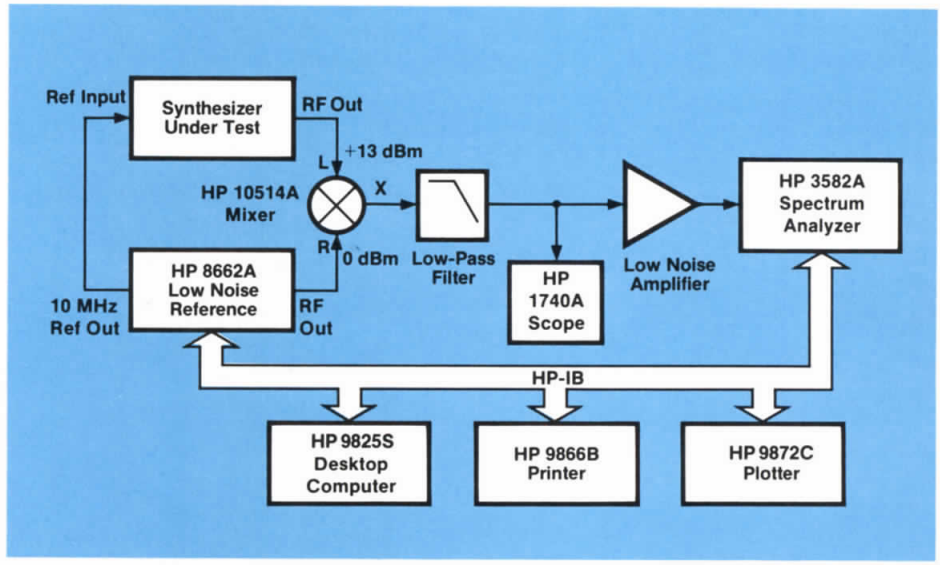

Figure 6.6. Automated system for phase noise measurement.

```
0: "PHASE NOISE    RF":
1: "Device 719 will be referred to as the 8662,etc.":
2: dev "8662",719,"3582",711,"9866",6,"9872",705
3: psc 705;pclr
4: dim A[5];dim A$[1]
5: "Enter frequency of device under test":
6: ent "Center Freq in MHz?",F
7: fmt 1,20x,"Center Frequency=",f12.7,"MHz",/,20x,33("*",/
8: wrt "9866.1",F
9: ent "Do you want graph?",A$
10: if cap(A$)="Y";jmp 1
11: if cap(A$)="N";jmp 2
12: gsb "GRAPH"
13: gsb "CALIBRATE"
14: gsb "QUADRATURE"
15: gsb "MEASURE 1"
16: gsb "MEASURE 2"
17: gsb "MEASURE 3"
18: gsb "MEASURE 4"
19: gsb "MEASURE 5"
20: gsb "PLOT"
21: fmt 2,3/
22: wrt "9866.2"
23: beep;wait 100;beep;dsp "TEST COMPLETE"
24: end
25:
26:
27:
28: "CALIBRATE":
29: "This subroutine is for setting the carrier reference amplitude":
30: "Manually switch in attenuation for calibration":
31: dsp "Add 40 dB attenuation";beep;stp
32: dsp "CALIBRATING"
33: fmt 3,"CLR,FR",f12.7,"MZ,HP16+D"
34: "Offset L.O. from carrier by 10 kHz for calibration":
35: F+.01→C
36: wrt "8662.3",C
37: "Measure carrier level with 3582":
38: wrt "3582","PRS,PS2,AGS,MN1,MP100"
39: wait 500
40: "Set reference and place in relative mode":
41: "Normalize out bandwidth factors":
42: wrt "3582","MS,MR1,MB1"
43: "Manually switch out the attenuation":
44: beep;dsp "Remove Attenuation";stp
45: ret
46:
47:
48:
49: "QUADRATURE":
50: "This subroutine is for setting phase quadrature":
51: "Offset the L.O. from carrier by 0.2 Hz.":
52: F+.0000002→Q
53: wrt "8662.3",Q
54: "Monitor mixer output on scope":
55: "When=0,reset L.O. to carrier frequency":
56: dsp "When zero volts press CONTINUE";beep;stp
57: wrt "8662.3",F
58: "This step provides a second chance in case of overshoot":
59: dsp "Try again,press f0;OK,press CONT";beep;stp
60: ret
61:
62:
63:
64: "MEASURE":
65: dsp "MEASURING PHASE NOISE"
66: "This subroutine takes parameters from MEASURE 1, etc.":
67: "These are used to set up actual 3582 measurements":
68: fmt 4,"MP",f3.0
69: fmt 5,"MD2,SP",f2.0,",AS",f2.0,",PS2,AV2,NU3,RE"
70: wrt "3582.5",S,G
71: "Wait while the 3582 averages 16 readings":
72: wait T;wait T
73: wrt "3582.4",M
74: "Make measurement and calculate phase noise":
75: wrt "3582","LMK";red "3582",L;L-49+J;J→A[N]
76: "PRINT":
77: "Print out results":
78: fmt 6,15x,"SSB Phase Noise at",f6.0,"Hz Offset=",f6.1,"dBc"
79: wrt "9866.6",0,J
80: ret
81:
82:
83:
84: "MEASURE 1":
85: 1→N
86: "These parameters are for the 10 Hz offset":
87: 7→S;8→G;25→M;10→0;22000→T
88: gto 65
89:
90:
91: "MEASURE 2":
92: 2→N
93: "These parameters are for the 100 Hz offset":
94: 250→M;100→0
95: gto 73
96:
97:
98: "MEASURE 3":
99: 3→N
100: "These parameters are for the 1 kHz offset":
101: 5000→T;100→M;11→S;1000→0
102: gto 70
103:
104:
105: "MEASURE 4":
106: 4→N
107: "These parameters are for the 10 kHz offset":
108: 14→S;10000→0
109: gto 70
110:
111:
112: "MEASURE 5":
113: 5→N
114: "These parameters are for the 25 kHz offset":
115: 25000→0;250→M
116: gto 73
117:
118: "PLOT":
119: pen# 3
120: wrt 705,"smo"
121: scl 1,5,-150,-50
122: for N=1 to 4
123: plt N,A[N]
124: next N
125: plt 4.4,A[5]
126: pen
127: gto 21
128:
129:
130:
131: "GRAPH":
132: pen# 1
133: scl 1,5, 150,-50
134: -160→B
135: for N=1 to 11
136: B+10→B
137: xax B,0,1,5
138: next N
139: for N=1 to 5
140: yax N,0,-150,-50
141: next N
142: csiz 2,2,.75
143: plt 1,-155;lbl "10"
144: plt 1.98,-155;lbl "100"
145: plt 2.95,-155;lbl "1k"
146: plt 3.95,-155;lbl "10k"
147: plt 4.35,-155;lbl "25k"
148: plt 4.95,-155;lbl "100k"
149: plt .8,-150,1;lbl "-150"
150: plt .8,-140,1;lbl "-140"
151: plt .8,-130,1;lbl "-130"
152: plt .8,-120,1;lbl "-120"
153: plt .8,-110,1;lbl "-110"
154: plt .8,-100,1;lbl "-100"
155: plt .8,-90,1;lbl "-90"
156: plt .8,-80,1;lbl "-80"
157: plt .8,-70,1;lbl "-70"
158: plt .8,-60,1;lbl "-60"
159: plt .8,-50,1;lbl "-50"
160: pen# 2
161: csiz 3,2,.75
162: plt 2.3,-160
163: lbl "Offset from Carrier (Hz)"
164: csiz 3,2,.75,90
165: plt .6,-145
166: lbl "SSB Phase Noise in 1 Hz BW (dBc)"
167: pen# 4
168: csiz 3,2,.75
169: plt 2.8,-47;lbl "CF=",F,"MHz"
170: ret
*3642
```

Figure 6.7. HP 9825S software for automatic phase noise measurement (cont'd).

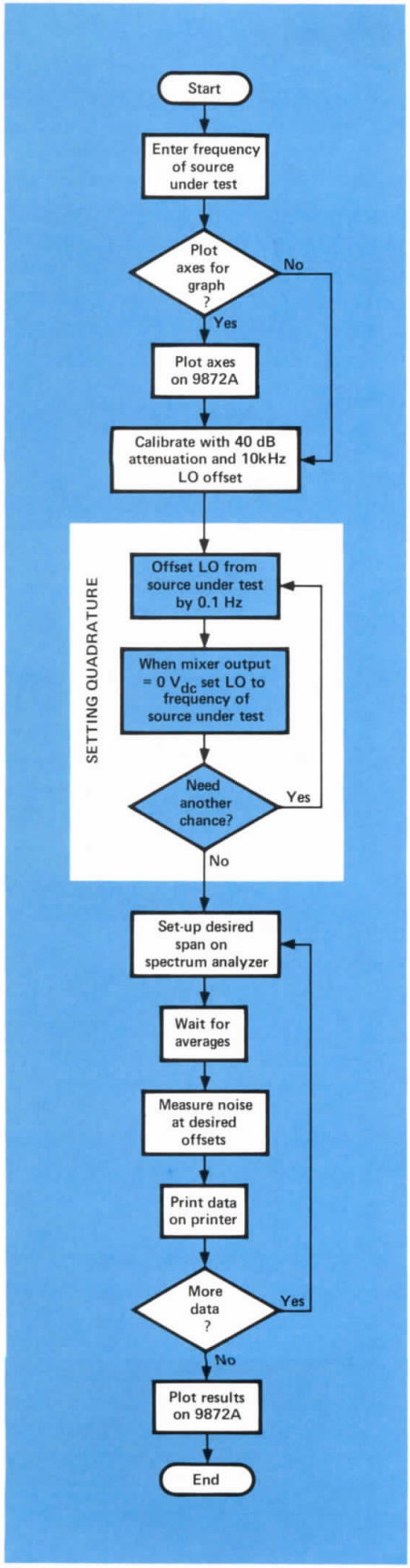

Figure 6.8. Flowchart for phase noise measurement.

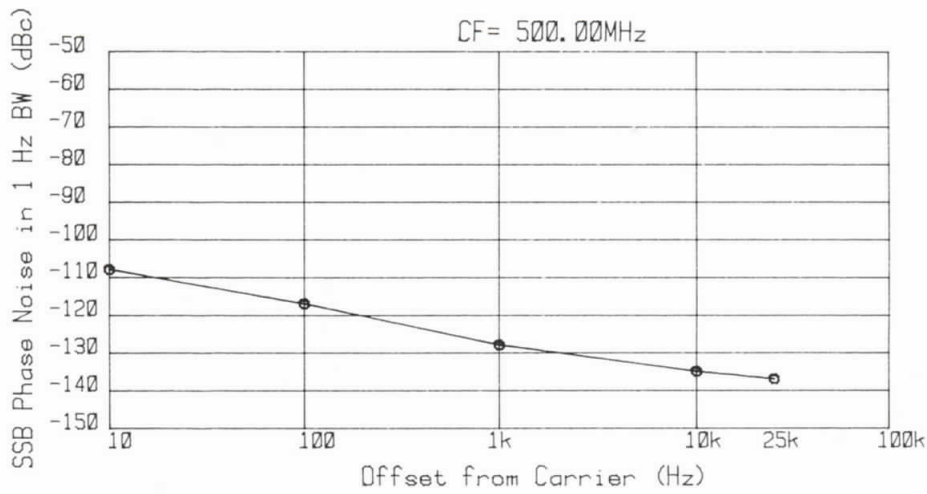

Figure 6.9. Typical hardcopy output from automatic measurement system.

Chapter 7

Using the 8662A at Microwave Frequencies

Why Use the 8662A at Microwave Frequencies?

As discussed in Chapter 2, in recent years the importance of phase noise in radar and communications systems has grown significantly. Modern systems such as two-way voice grade radio, digital communications, and doppler radar have become increasingly dependent on low phase noise signals, both for signal simulation and system testing.

Although two-way radios usually operate over frequencies within the range of the 8662A (see Chapter 8), many other phase noise dependent systems operate at frequencies well above the 1280 MHz frequency range of the 8662A. For example, airborne doppler radar operates at a frequency around 10 GHz. Low phase noise signals are absolutely critical for these systems, both very close-in to the carrier (representing slow-moving objects), and also at larger offsets from the carrier, on the order of 25-50 kHz and further out (echoes from objects moving toward or away from the radar at higher velocities). This chapter will investigate how the 8662A, through an RF signal generator, can be used to provide the required signal performance at microwave frequencies for both signal simulation and signal testing.

Effect of Multiplication on the Noise of a Signal

Basic modulation theory and spectral density relationships can be used to derive the effect that multiplication has on the noise of a signal. In Chapter 2, $\mathcal{L}(f)$ was defined as the ratio of the single sideband power of phase noise in a 1 Hz bandwidth f_m hertz away from the carrier frequency to the total signal power. This definition of $\mathcal{L}(f)$ is primarily applied to random noise. To relate $\mathcal{L}(f)$ to random or sinusoidal phase modulation, a signal with sinusoidal frequency modulation is considered first and converted to phase modulation.

$$f = f_o + \Delta f_{peak} \cos 2\pi f_m t$$

$$\phi = \int 2\pi f(t)dt$$

$$v(t) = V_s \cos [2\pi f_o t + \pi (t)]$$

$$v(t) = V_s \cos \left(2\pi f_o t + \frac{\Delta f_{peak}}{f_m} \sin 2\pi f_m t\right)$$

Now using the small modulation index approximation, for

$$\frac{\Delta f_{peak}}{f_m} \ll 1$$

Bessel algebra yields the single sideband to carrier ratio:

$$\frac{V_{ssb}}{V_s} \approx J_1 \frac{\Delta f_{peak}}{f_m} = \tfrac{1}{2} \frac{\Delta f_{peak}}{f_m} \approx \tfrac{1}{2} \Delta\phi_{peak}$$

Then $\mathcal{L}(f) = \left| \frac{V_{ssb}}{V_s}^2 \right|$

or in logarithmic form

$$\mathcal{L}(f) = -6\,dB + 20 \log \frac{\Delta f_{peak}}{f_m} \qquad \text{Eqn. 7.1.}$$

For a more complete derivation of $\mathcal{L}(f)$, see "Today's Lesson — Learn about Low-Noise Design", Part I and Part II, Microwaves, April and May 1979.

Equation 7.1 is in a convenient form for calculating the increase in phase noise when a signal is multiplied up. Basic modulation theory says that when a signal $f \pm \Delta f$ is doubled, the frequency deviation is doubled, but the rate of modulation remains the same. Considering phase noise as just unwanted angular modulation on a carrier, doubling the carrier frequency will therefore yield twice the frequency deviation at the same rate. Substituting for $\mathcal{L}(f)$ in equation 7.1 yields

$$\mathcal{L}(2f) = -6\,dB + 20 \log \frac{2\Delta f_{peak}}{f_m}$$

$$\text{and } \frac{\mathcal{L}(2f)}{\mathcal{L}(f)} = 6\,dB.$$

Therefore, each doubling of the carrier frequency results in 6 dB higher phase noise.

8662A Phase Noise Performance at Microwave Frequencies

The above calculations show that multiplying a 1000 MHz signal directly from the 8662A front-panel output 10 times to a frequency of 10 GHz increases the phase noise 20 log 10 or 20 dB. Plotting the resultant phase noise of this multiplied signal versus the phase noise of the Hewlett-Packard Model 8672A Microwave Synthesized Signal Generator at the same frequency yields the graph of Figure 7.1.

The graph shows that the signal from the 8662A multiplied up to 10 GHz has noise 20 dB lower at offsets from 100 Hz to 10 kHz than that noise provided by a typical microwave generator! However, generating a low noise signal in this manner has some trade-offs that must be considered. First, the broadband noise of a multiplied-up front-panel 8662A signal is somewhat higher than that of typical microwave synthesizers. Second, whenever a signal is externally multiplied, unwanted spurious resonses are also created, the output level calibration is lost. AM modulation performance is severely limited, and the maximum available output power is significantly reduced. The following section will discuss an alternate system, other than just multiplying the front-panel signal, that will counteract some of these advantages.

Note: If signal generator characteristics are needed at microwave frequencies, but the phase noise of the 8672A is not sufficiently low for the application, there is a simple technique which uses the 8662A as an LO to substitute for the VCO in one of the 8672A's phase lock loops. This method results in improved phase noise performance over the standard 8672A, while maintaining the maximum output power level, output power calibration, amplitude modulation, and spurious performance of the 8672A. At the same time, increased frequency resolution and frequency modulation capability are pro-

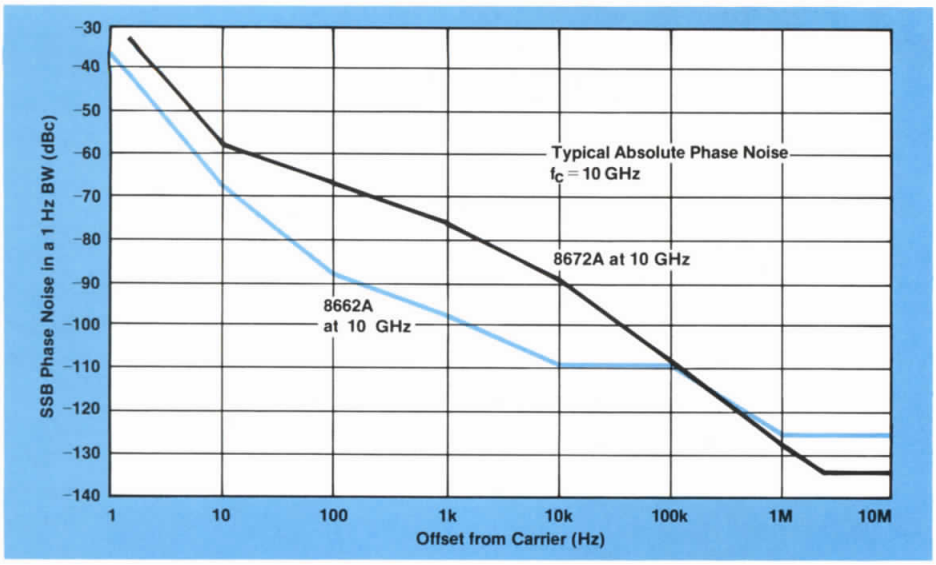

Figure 7.1. Phase noise comparison of 8662A and 8672A.

vided. See Chapter 12 for the block diagram and system performance.

Using the 8662A for Low Noise Microwave Signal Generation

Figure 7.1 shows the level of phase noise performance obtainable by multiplying a signal from the front panel of the 8662A. Though useful for many applications, it does not represent the maximum performance level that can be obtained. Chapter 3 discussed the design of the 8662A reference section, a critical subblock where low noise design was emphasized. The careful attention paid to low-noise design in the reference section can be utilized in a Low Phase Noise Multiplication Scheme for Microwave Signal Generation.

In the reference section of the 8662A, the 10 MHz reference signal is directly multiplied up to a frequency of 640 MHz through the use of six frequency doublers (Figure 7.2). The effect of this frequency multiplication would be to increase the phase noise of the internal reference by 20 log (640/10) or 36 dB, resulting in a noise characteristic as shown in Figure 7.3. However, to reduce sideband noise, monolithic crystal filters were added in the reference multiplier chain at 40 and 160 MHz. These filter the noise sidebands at offsets greater than about 4 kHz (6 kHz bandwidth at 40 MHz) and 10 kHz (18 kHz BW at 160 MHz), to yield a 640 MHz signal out of the reference section with phase noise typically −95 dBc at a 10 Hz offset from the carrier, decreasing to a noise floor of greater than −160 dBc at offsets greater than about 18—20 kHz!

The absolute noise on the directly synthesized 640 MHz signal is significantly lower than the noise on a 640 MHz signal from the front panel of the 8662A. Figure 7.4 shows a technique to utilize the low noise characteristics of this 640 MHz signal to generate low noise microwave signals. The basic multiplying scheme utilizes a step recovery diode multiplier to obtain a comb of frequencies extending up through the X-band microwave region.

Note. A step recovery diode fits into the group of frequency multipliers that operate by harmonic generation by nonlinear capacitance, rather than harmonic generation by nonlinear conductance. Though multipliers with nonlinear capacitance typically yield more efficient, simpler circuits, they also generate significantly more phase noise than multipliers based on nonlinear conductance. For more information on methods of frequency multiplication, see "Generation of Low Phase Noise Microwave Signals", Dieter Scherer, Hewlett-Packard RF and Microwave Measurement Symposium, May 1981, and Hewlett-Packard Application Note 983, Comb Generator Simplifies Multiplier Design.

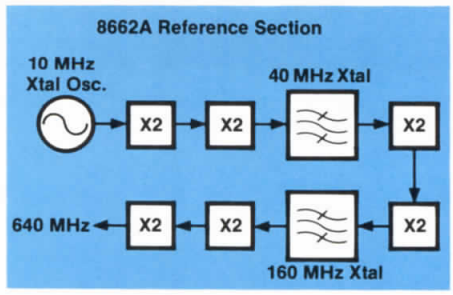

Figure 7.2. Direct synthesized 640 MHz signal.

This Low Noise Multiplication Scheme starts with the 640 MHz Reference Signal, available from the rear panel of 8662A option C-05. This signal is at a level of about +3 dBm, and is first filtered through a 640 MHz bandpass filter to reject any 10 MHz reference or 20 MHz reference harmonic spurious sidebands that are present due to the synthesis process in the reference section. The signal is then amplified to a level of about +27 dBm, sufficient to drive the HP 33004A Step Recovery Diode Multiplier (marketed as the HP 33004A Pulse Generator). The 33004A is specified only for inputs up to 500 MHz, but it will provide a comb of frequencies at slightly reduced conversion performance from the 640 MHz input signal. Note that the phase noise generated by the 33004A can be sensitive to drive level; excessive drive level may increase phase noise.

If the output of the 33004A is examined in the time domain, the output is seen as a series of pulses spaced

$$\frac{1}{640 \times 10^6 \text{ Hz}}$$

or 1.56 nanoseconds apart. In the frequency domain, this is equivalent to a comb of frequencies spaced 640 MHz apart that extends into the microwave region.

To reduce spurious responses and obtain the best conversion efficiency, a suitable bandpass filter selects the desired line element closest to the output frequency. The circulator (or isolator) absorbs unwanted reflections from the bandpass filter. The result is a clean multiple of the 640 MHz signal, which is then mixed with an output signal from the front panel of the 8662A to provide continuous frequency coverage. A final bandpass filter

can then be used to remove any mixing products. This system yields an extremely clean microwave signal at a level of about –6 dBm. Typical noise performance of this low noise microwave signal generation technique is discussed the section titled "System Noise Performance".

Using the 8662A to Make Phase Noise Measurements on Microwave Sources

Chapter 6 describes a measurement system which uses the 8662A as a low-noise reference source to make manual or automatic SSB phase noise measurements at RF frequencies. These phase noise measurements are also often critical at microwave frequencies. This section will describe the use of the low noise microwave frequency generation technique described earlier as the basis of an automatic microwave phase noise measurement system.

Measurement technique

The basic measurement is still the traditional two-source, double balanced mixer technique discussed in Chapters 5 and 6. However, a "double conversion" approach using the low noise 640 MHz reference signal ensures low noise performance at microwave frequencies. A block diagram for this double conversion scheme is shown in Figure 7.5.

The microwave reference signal is generated with the low noise signal generation technique just described. The 640 MHz Auxiliary Output signal from the reference section (provided only with 8662A special option C-05) is filtered and then amplified to drive the step recovery diode multiplier (HP 33004A), generating a comb of output frequencies spaced 640 MHz apart up through X-band. The proper comb line (i.e., the comb line closest in frequency to the microwave source under test) is selected with a bandpass filter, with the isolator used to absorb unwanted reflections from this filter.

This harmonic of the 640 MHz signal is then mixed with the microwave source under test to yield an intermediate frequency (IF) anywhere from 10 kHz (the low end of the 8662A frequency range) to 320 MHz (640 MHz/2). If an IF less than 10 kHz is generated, the next comb line must be selected, resulting in a new IF between 10 kHz and 640 MHz, well within the frequency range of the 8662A.

The second down-conversion stage of the system operates essentially the same as the two-source method discussed in Chapters 5 and 6. The IF signal is amplified and then fed into the LO port of a second mixer (HP 10514A), where it is converted down with a signal of identical frequency from the front panel of the 8662A. This produces a dc signal with a simultaneous ac component that represents the phase noise fluctuations. A final low-pass filter removes any unwanted mixer products before the measurement is made.

This particular block diagram is optimized for narrowband applications, where the source under test is of only one frequency or a small range of frequencies. For more broadband applications, or

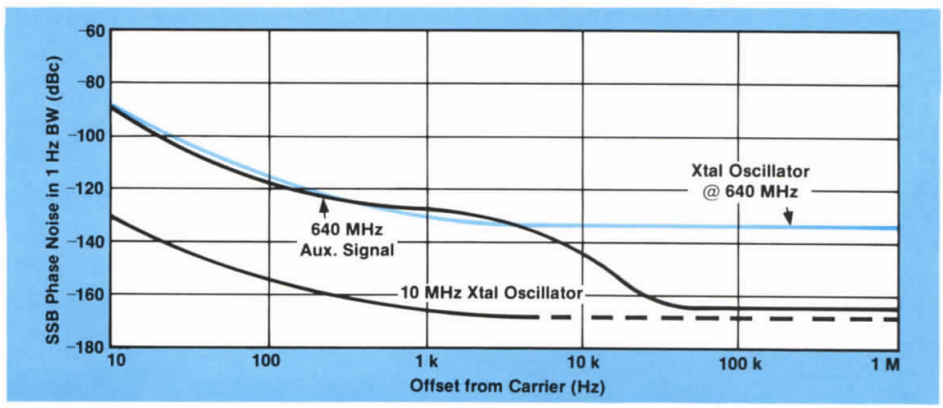

Figure 7.3. Phase noise of 640 MHz reference signal.

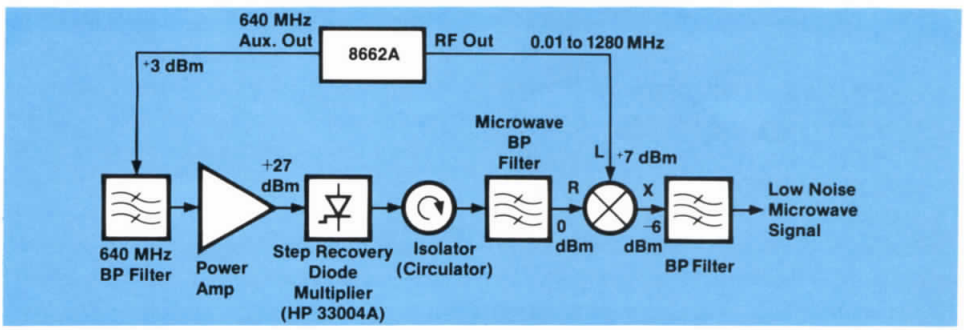

Figure 7.4. Low phase noise multiplication scheme for microwave signal generation.

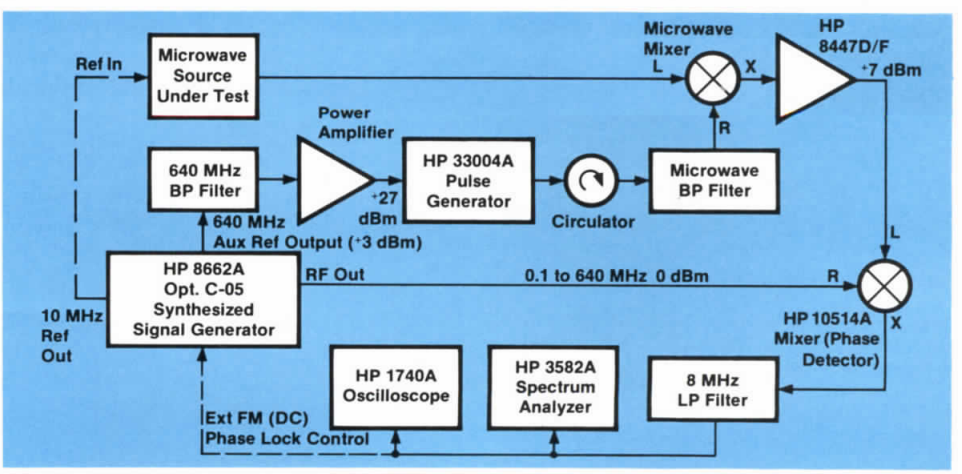

Figure 7.5. Microwave phase noise measurement using HP 8662A.

where a number of frequencies must be tested, the microwave filter and mixer can be replaced with a broadband microwave sampler. The output of the pulse generator would then sample in time the output frequency of the source under test. The action of sampling a constant frequency with a series of pulses in the time domain is equivalent to a harmonic mixing process in the frequency domain. Therefore, the output of the sampler would be a frequency equal to the frequency of the source under test $\pm N \times 640$ MHz, or an IF between 0 and 320 MHz, as above.

Measurement procedure

The measurement procedure is also nearly identical to the two-source method described in Chapters 5 and 6. To calibrate the system, the input signals to the second mixer are offset slightly in frequency by offsetting the front panel output frequency of the 8662A. At the same time the level to the RF port of the second mixer (8662A front panel signal) is reduced by 40 dB, producing a beat note relative to which the noise can be measured.

The two signals are then set into quadrature, and the output of the second mixer, which represents the phase noise of the signals, is observed on the HP 3582A low-frequency spectrum analyzer.

One additional step in the microwave phase noise measurement process is a calculation of the 8662A tuned frequency to produce a 0 Hz or dc IF after the second down-conversion. A simple algorithm relates the frequency of the device under test to the Nth harmonic of the 640 MHz reference signal that the test frequency will mix with and the corresponding 8662A front panel frequency setting. If f_{dut} is the frequency of the microwave source under test, then $f_{dut}/640$ MHz will result in a quotient N.RR, where N is the number of the harmonic of the 640 MHz reference signal. If N were always such that N x 640 MHz was less than f_{dut}, then the IF frequency would lie between 0 Hz and 640 MHz. In actual practice however, the microwave frequency under test will also mix with the closest harmonic, yielding an IF between 0 and 320 MHz. Therefore, if $f_{dut}/640$ MHz yields a quotient N.RR, where the fractional remainder RR is less than 0.5, then the test frequency will mix with the Nth harmonic, and the 8662A should be tuned to f_{dut} — (640 MHz x N). If on the other hand, $f_{dut}/640$ MHz yields N.RR, and the fractional remainder RR is greater than 0.5, then the test frequency will mix with the $(N+1)^{th}$ harmonic, and the 8662A should be tuned to $|\ f_{dut} - [640\ \text{MHz} \times (N+1)]\ |$.

This is best shown by example. If the microwave test frequency is 10.5 GHz, then $f_{dut}/640$ MHz yields 16.41. This signifies that the 16th harmonic (10.24 GHz) of the 640 MHz Reference Signal will mix with the 10.5 GHz test signal, with a resultant IF of 10.5 GHz — (640 MHz x 16), or 260 MHz. Thus setting the 8662A to an output frequency of 260 MHz will produce a dc IF after the second conversion stage. If however, the test frequency is 10.8 GHz, then $f_{dut}/640$ MHz = 16.88. Now the test frequency will actually mix with the $(N+1)^{th}$ harmonic (17), and the 8662A should be set to | 10.8 GHz — [640 MHz x 17] |or 80 MHz.

System noise performance

Because the system noise limit of the microwave phase noise measurement is equal to the noise performance of the low noise microwave signal generation technique, both systems will be discussed here. The actual system noise limit is dependent on the frequency of the device under test, as this determines which harmonic of the 640 MHz reference signal will be used. Figure 7.6 shows the absolute phase noise of the 640 MHz signal, and from this absolute noise at 640 MHz, the noise limitations at the desired microwave frequency can be easily calculated. For a test frequency of 10 GHz, the 16th harmonic of the 640 MHz signal will be used, resulting in a 20 log 16 or 24 dB increase in phase noise. This system noise limit at 10 GHz is also plotted, showing that this system can measure absolute phase noise of −71 dB below the carrier at a 10 Hz offset, and a −137 dBc noise floor!

To provide continuous frequency coverage in the low noise signal generation technique and to down-convert to a 0 Hz second stage IF in the microwave phase noise measurement system, a signal from the front panel of the 8662A is mixed in. For both systems, the maximum frequency of this signal is 640 MHz. For test frequencies less than 6.4 GHz, the noise on this front panel signal is greater than the noise on the multiplied up reference signal for offsets from the carrier greater than 2 kHz. The dashed line in Figure 7.6 shows the potential noise contribution that this front panel signal (320 to 640 MHz) can add to the noise of the system. For IF's less than 320 MHz (the majority of the time), this potential contribution is 6 dB less.

Noise measurements on free-running sources

This dual-conversion microwave phase noise measurement technique also improves measurements on non-synthesized sources. For measurements on a synthesized source, the time bases of the 8662A and the source under test are locked together, ensuring that quadrature can be established and maintained for the duration of the measurement. For measurements on a free-running or non-lockable source, the 8662A can be

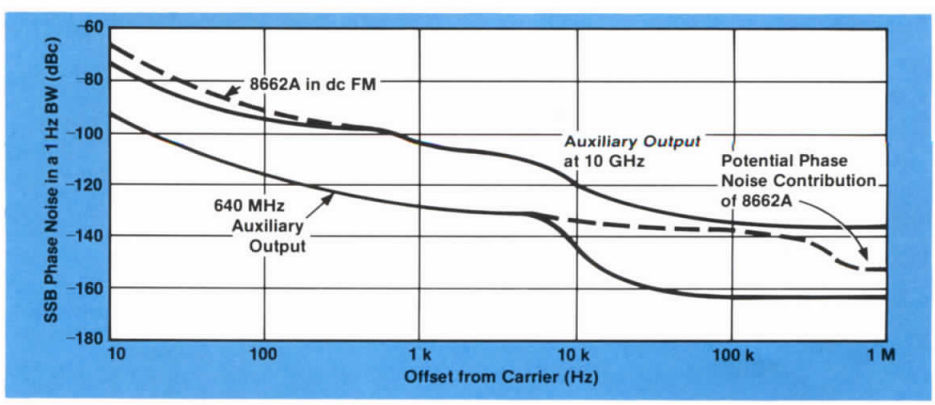

Figure 7.6. System absolute noise performance.

phase-locked in a narrow bandwidth to the microwave source under test via its dc FM port.

The output of the second down-conversion stage, 0 Hz or dc when in phase-quadrature, can be used as an error signal and fed back to the external dc-coupled FM port of the 8662A. This creates a phase-lock loop, forcing the 8662A to track the source under test in phase and thus maintain quadrature. To avoid phase noise cancellations due to loop tracking, the bandwidth of the phase-lock loop must be much less than the lowest offset frequency of interest. The resulting phase-lock loop is essen tially first order, and thus the bandwidth of the loop can be calculated as described in Chapter 6 "Phase-Locked Measurements Using the 8662A dc FM". In practice, it is recommended to establish phase lock by varying the RF frequency of the 8662A, then reducing the loop bandwidth by reducing the 8662A FM deviation to the point shortly before lock is lost.

Due to the free-running nature of the FM oscillator, the absolute phase noise of the 8662A is slightly higher when in the dc FM mode. Therefore, close-in to the carrier, the system noise limit increases slightly when using dc FM in this phase-locked measurement technique (see Figure 7.6).

Measurements on pulsed sources

It is also possible to make this phase noise measurement while the test source is pulsed. In this case, the LPF (low-pass filter) following the second mixer needs to have a cut-off frequency below the pulse repetition rate. All other performance parameters should remain unchanged. However, due to non-perfect pulse shapes, certain inaccuracies may occur. Individual systems should be analyzed for measurement performance and accuracy.

Automated microwave SSB phase noise measurements using HP-IB

As in the RF system of Chapter 6, because both the 8662A Signal Generator and the 3582A Spectrum Analyzer are programmable, the microwave phase noise measurement system can be automated for faster and more repeatable measurements. The automated system is simply the manual system shown in Figure 7.5 with a computer added for instrument control and data collection and a printer for data documentation. A plotter for graphical display of the data is optional.

An example of such an automated system uses the Hewlett-Packard Model 9825S Desktop Computer, the Model 9866B Printer, and the Model 9872C Plotter. Typical system software based on the 9825S is presented in Figure 7.7. The software very closely follows the measurement procedure for the analagous RF phase noise measurement (Chapter 6, "Measuring SSB Phase Noise with the 8662A"), but additional calculations are provided to compute the frequency that the 8662A must be set to in order to yield a 0 Hz IF out of the second mixer. The software subroutines are easily modified if different averaging numbers are required, or to change the offsets at which phase noise is measured, or for convenience in printing and plotting.

Summary

The 8662A's low phase noise properties can be used to provide state-of-the-art phase noise performance at microwave frequencies. The standard 8662A front-panel signal can be multiplied up to microwave, offering close-in phase noise improvements of tens of dBs over other available microwave sources. Alternatively, to produce lower noise performance at microwave frequencies, a very low noise 8662A Reference Signal can be used in a Low Noise Multiplication Scheme for Microwave Signal Generation. This technique can be used to produce signals with absolute noise −71 dBc at a 10 Hz offset, with a noise floor greater than −135 dBc for a carrier frequency of 10 GHz. The same low noise Reference Signal can also be used as the basis for an automated Microwave Phase Noise Measurement System.

```
0: "PHASE NOISE     MICROWAVE":
1: ldk 1
2: "Device 719 will be referred to as the 8662,etc.":
3: dev "8662",720,"3582",711,"9866",6,"9872",705,"8672",719
4: psc 705;pclr
5: dim A[5];dim A$[1]
6: "Enter frequency of device under test":
7: ent "Enter 8672 frequency in GHz",F
8: wrt "8672","03L8"
9: if F<=10;jmp 3
10: fmt 8,"P",f8.0,"JO"
11: F*1000000)K;wrt "8672.8",K;jmp 3
12: fmt 9,"A",f7.0,"JO"
13: F*1000000)K;wrt "8672.9",K
14: F/.64)H
15: if frc(H)<=.5;jmp 2
16: int(H)+1)H
17: F-.64*int(H))L;abs(L))L;L*1000)L
18: if L>.01;jmp 2
19: beep;dsp "ENTRY OUT OF LIMITS";stp ;gto 6
20: fmt 1,20x,"Center Frequency=",f12.9,"GHz",/,20x,33"*",//
21: wrt "9866.1",F
22: ent "Do you want graph?",A$
23: if cap(A$)="Y";jmp 1
24: if cap(A$)="N";jmp 2
25: gsb "GRAPH"
26: gsb "CALIBRATE"
27: gsb "QUADRATURE"
28: gsb "MEASURE 1"
29: gsb "MEASURE 2"
30: gsb "MEASURE 3"
31: gsb "MEASURE 4"
32: gsb "MEASURE 5"
33: gsb "PLOT"
34: fmt 2,3/
35: wrt "9866.2"
36: beep;wait 100;beep;wait 100;beep;dsp "TEST COMPLETE"
37: end
38:
39:
40:
41: "CALIBRATE":
42: "This subroutine is for setting the carrier reference amplitude":
43: dsp "CALIBRATING"
44: fmt 3,"SP00,FR",f12.7,"MZ,AP",f4.1,"-D"
45: "Offset L.O. from carrier by 10 kHz for calibration":
46: L+.01)C
47: 40)D
48: wrt "8662.3",C,D
49: "Measure carrier level with 3582":
50: wrt "3582","PRS,PS1,AS8,MN1,MP100"
51: wait 1000
52: "Set reference and place in relative mode":
53: "Normalize out bandwidth factors":
54: wrt "3582","MS,MR1,MB1"
55: wrt "8662","AP0+D"
56: ret
57:
58:
59:
60: "QUADRATURE":
61: "This subroutine is for setting phase quadrature":
62: "Offset the L.O. from carrier by 0.2 Hz.":
63: L+.0000002)Q
64: 0)D
65: wrt "8662.3",Q,D
66: "Monitor mixer output on scope":
67: "When=0,reset L.O. to carrier frequency":
68: dsp "When zero volts press CONTINUE";beep;stp
69: wrt "8662","FR",L,"MZ"
70: "This step provides a second chance in case of overshoot":
71: dsp "Try again,press f0;OK,press CONT";beep;stp
72: ret
73:
74:
75:
76: "MEASURE":
77: dsp "MEASURING PHASE NOISE"
78: "This subroutine takes parameters from MEASURE 1, etc.":
79: "These are used to set up actual 3582 measurements":
80: fmt 4,"MP",f3.0
81: fmt 5,"MD2,SP",f2.0,",AS",f2.0,",PS2,AV2,NU3,RE"
82: wrt "3582,5",S,G
83: "Wait while the 3582 averages 16 readings":
84: wait T;wait T
85: wrt "3582.4",M
86: "Make measurement and calculate phase noise":
87: wrt "3582","LMK";wait 100;red "3582",L;L-49)J;J)A[N]
88: "PRINT":
89: "Print out results":
90: fmt 6,15x,"SSB Phase Noise at",f6.0,"Hz Offset=",f6.1,"dBc"
91: wrt "9866.6",0,J
92: ret
93:
94:
95:
96: "MEASURE 1":
97: 1)N
98: "These parameters are for the 10 Hz offset":
99: 7)S;8)G;25)M;10)0;22000)T
100: gto 77
101:
102:
103: "MEASURE 2":
104: 2)N
105: "These parameters are for the 100 Hz offset":
106: 250)M;100)0
107: gto 85
108:
109:
110: "MEASURE 3":
111: 3)N
112: "These parameters are for the 1 kHz offset":
113: 5000)T;100)M;11)S;1000)0
114: gto 82
115:
116:
117: "MEASURE 4":
118: 4)N
119: "These parameters are for the 10 kHz offset":
120: 14)S;10000)0
121: gto 82
122:
123:
124: "MEASURE 5":
125: 5)N
126: "These parameters are for the 25 kHz offset":
127: 25000)0;250)M
128: gto 85
129:
130: "PLOT":
131: pen# 3
132: wrt 705,"smo"
133: scl 1,5,-150,-50
134: for N=1 to 4
135: plt N,A[N]
136: next N
137: plt 4.4,A[5]
138: pen
139: gto 34
140:
141:
142:
143: "GRAPH":
144: pen# 1
145: scl 1,5,-150,-50
146: -160)B
147: for N=1 to 11
148: B+10)B
149: xax B,0,1,5
150: next N
151: for N=1 to 5
152: yax N,0, 150,-50
153: next N
154: csiz 2,2,.75
155: plt 1,-155;lbl "10"
156: plt 1.98,-155;lbl "100"
157: plt 2.95,-155;lbl "1k"
158: plt 3.95,-155;lbl "10k"
159: plt 4.35,-155;lbl "25k"
160: plt 4.95,-155;lbl "100k"
161: plt .8,-150,1;lbl "-150"
162: plt .8,-140,1;lbl "-140"
163: plt .8,-130,1;lbl "-130"
164: plt .8,-120,1;lbl "-120"
165: plt .8,-110,1;lbl "-110"
166: plt .8,-100,1;lbl "-100"
167: plt .8,-90,1;lbl "-90"
168: plt .8,-80,1;lbl "-80"
169: plt .8,-70,1;lbl "-70"
170: plt .8,-60,1;lbl "-60"
171: plt .8,-50,1;lbl "-50"
172: pen# 2
173: csiz 3,2,.75
174: plt 2.3,-160
175: lbl "Offset from Carrier (Hz)"
176: csiz 3,2,.75,90
177: plt .6,-145
178: lbl "SSB Phase Noise in 1 Hz BW (dBc)"
179: pen# 4
180: csiz 3,2,.75
181: plt 2.8,-47;lbl "CF=",F," GHz"
182: ret
*25937
```

Figure 7.7. HP 9825 software for microwave phase noise measurement.

Chapter 8

Voice Grade Receiver Testing with the 8662A

Receiver testing has traditionally been a major application of signal generators, initially for manual testing only. Then with the advent of synthesized signal generators, many receiver tests could be automated. But some tests still required a manual signal generator because of stringent phase noise requirements. The design of the 8662A yields a noise spectrum that combines the low phase noise at typical receiver channel spacings previously found only in manually tuned generators with the programmability of a synthesized signal generator. This combination yields increased capability for receiver testing, allowing the full range of receiver tests to be automated.

The spectral purity of the 8662A is most commonly measured in terms of single-sideband phase noise, but it can also be expressed in terms of residual FM and spurious. Residual FM is the total noise measured in some post-detection bandwidth. Spurious signals are those unwanted signals generated as a result of the various nonlinear operations such as mixing that are part of the synthesis process. These measures of spectral purity are also important in defining the performance requirements necessary for a signal generator to make receiver measurements.

There are many receiver tests and many test standards for these measurements used around the world. These include the Institute of Electrical and Electronic Engineers (I.E.E.E.) and the Electronic Industries Association (EIA) standards in the United States and the Conference of European Postal and Telecommunications Administration (CEPT), British Post Office (BPO), and International Electrotechnical Commission (IEC) standards in Europe. Though the details of these tests vary considerably, the receiver parameters that must be tested are basically the same.

This chapter describes the two basic categories of receiver testing, the signal generator performance required by them, and how the 8662A meets these test requirements.

Receiver Test Basics: In-Channel and Out-of-Channel Testing

Receiver tests can be roughly subdivided into two basic types: in-channel and out-of-channel. In-channel testing is exactly what the name implies — evaluating the performance of the receiver when the test signal is applied at the exact frequency to which the receiver is tuned. These tests determine how well the receiver responds to the signal that it is intended to receive. An example of this type of test is useable sensitivity — the smallest level of RF signal applied at the input of the receiver that will give intelligible information at the output. The definition of 'intelligible' information varies with the test standard being used.

Many receiver tests use a calculation called 'SINAD' as a measure of the received signal quality. SINAD is equal to the ratio of (signal plus noise plus distortion) to (noise plus distortion) at the same output level; that is,

$$\text{SINAD (dB)} = 20 \log \frac{S + N + D}{N + D}$$

The measuring instrument at the audio output of the receiver is generally some type of distortion analyzer. For a SINAD measurement, the analyzer first acts as a broadband voltmeter, measuring the total output of the receiver. Then a filter notches out the audio modulation tone, and the resultant noise plus distortion is measured. The ratio of the two measurements is SINAD, and is commonly expressed in dB. The EIA-FM standard defines useable sensitivity as that RF input level which produces 12 dB SINAD at ≥50% of rated audio output power.

Almost all areas of signal generator performance are important for in-channel testing, with the level of performance needed dependent on the receiver being tested. All three primary performance areas — frequency, output level, and modulation — must be considered. The 8662A provides high performance in every specification including frequency resolution, accuracy, and stability; output level resolution and accuracy; and AM and FM with either ac or dc coupled input.

Certain measures of spectral purity can be important for in-channel testing. The low close-in phase noise of the 8662A translates into extremely low residual FM. Typical residual FM in a 300 Hz to 3 kHz post-detection bandwidth is a few tenths of a hertz. Residual FM can be an important specification for in-channel tests such as receiver residual hum and noise, where the residual FM results in a small amount of detected noise, falsely increasing the measured signal noise.

Out-of-channel testing determines how well the receiver rejects those signals that it is not intended to receive. Here the test signal is applied not at the frequency that the receiver is tuned to but rather some other frequency. An example of this kind of test is adjacent channel selectivity, a measure of the ability of the receiver to select the desired in-channel signal while rejecting a signal that is present one channel spacing away.

Out-of-channel testing is generally considered more demanding on the test signal generator than in-channel testing. The primary performance requirements needed from the signal generator to make these tests are low spurious and low phase noise at offsets from the carrier equal to the channel spacings of the receiver. An examination of two of these out-of channel tests shows why.

Using the 8662A for Adjacent Channel Receiver Tests

The adjacent channel selectivity test defined above is one of the most common out-of-channel tests. Two generators are used in this test, one in-channel to simulate the desired signal and the other out-of-channel to simulate an unwanted signal. The following example procedure follows the EIA standard for FM receivers — specification # R5-204-B.

Generator #1 produces the in-channel signal, generator #2 the out-of-channel signal (see Figure 8.1). With generator #2 turned off, generator #1 is set in-channel and modulated with a 1 kHz tone at 60% of the maximum rated deviation of the receiver. The level of generator #1 is set to the useable sensitivity of the receiver (12 dB SINAD for the EIA-FM standard).

Again, the measurement instrument at the audio output of the receiver is generally some type of distortion analyzer. Figure 8.1 shows a Hewlett-Packard Model 8903A Audio Analyzer, which automatically makes the two measurements necessary for a SINAD ratio, then internally calculates and displays SINAD directly in dB. The 8903A is also fully programmable, allowing the entire test to be automated.

With signal generator #1 set to the useable sensitivity of the receiver, generator #2 is tuned to the adjacent channel of the receiver. It too is modulated at 60% of the receiver's maximum deviation, but with a 400 Hz tone.

The level of generator #2 is then increased until the measured SINAD ratio of the receiver drops by the amount defined in the test standard, −6 dB in the case of the EIA standard. This drop in signal-to-noise ratio is a result of any 400 Hz from generator #2 plus noise generated in the receiver caused by the interference of the adjacent channel signal. The difference between the two output settings on the generators is then defined as the receiver's selectivity. The higher the receiver's selectivity, the greater the level of out-of-channel interference it will be able to reject.

Phase noise is probably the most important specification which determines whether the signal generator can make an adjacent channel selectivity measurement. Figure 8.2 shows the transfer characteristic of a receiver's IF filter; the selectivity test is designed to show how well the IF filters in the receiver reject signals outside the normal pass-band. If a generator's phase noise is inadequate, as the level of the out-of-channel generator is increased, the high level of phase noise at the channel spacing would appear within the bandwidth of the selected channel and would contribute to the distortion being measured. As a result, the test would not be measuring the receiver's ability to reject a signal one channel away, but rather how much noise the signal generator itself had at a channel spacing offset from the carrier.

Figure 8.2 shows the noise spectrum of two signals used as the out-of-channel signal. The solid line is an example of a signal generator with inadequate noise performance to make an out-of-channel test; its noise power at a channel offset appears within the bandwidth of the selected channel at a higher level than the desired signal. The dashed line represents a signal with low enough phase noise at a channel spacing to not add significantly to the measured noise within the bandwidth of the selected channel.

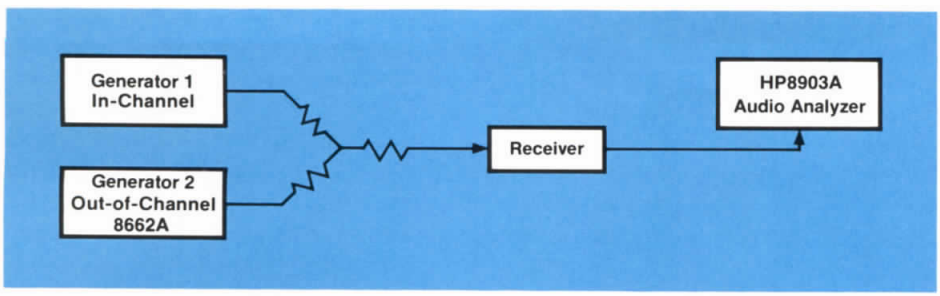

Figure 8.1. *Receiver adjacent channel* selectivity measurement.

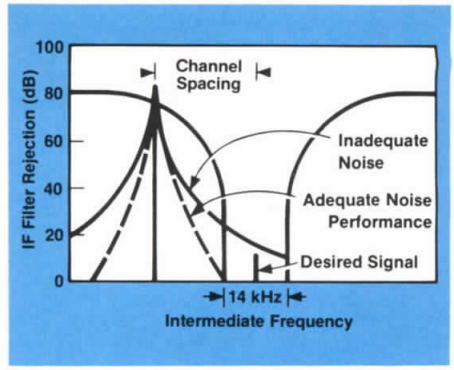

Figure 8.2. Signal generator phase noise in adjacent channel test.

The phase noise performance of generator #2 required to make a valid measurement of the receiver is easily calculated. The conversion from the selectivity specification on the receiver to the needed specification on the signal generator is shown below.

Receiver adjacent channel spec

+

Conversion of the noise in a 1 Hz BW spec'd on the sig gen to the noise BW of the receiver

+

Measurement margin

=

Sig gen absolute noise specification at 1 channel offset from carrier.

The first factor is the receiver's adjacent channel rejection specification. In the EIA Standard, the minimum standard is 70 dB. The second factor is a conversion of the noise of the signal generator, generally specified in a 1 Hz bandwidth, to the equivalent noise in the bandwidth of the receiver under test. For a receiver with a 14 kHz IF bandwidth, this conversion is

$$\text{dB} = 10 \log_{10} \frac{14\ \text{kHz}}{1\ \text{Hz}} = 10\ (4.2) = 42\ \text{dB}$$

The third factor, measurement margin, is the most arbitrary factor. In the adjacent channel test, the analyzer measures the noise contributions from two

sources: any noise generated by the receiver as a result of the interference of the adjacent channel signal (desired measurement), and the phase noise of the signal generator that falls in-channel (undesired). If, for example, these noise levels are equal, the distortion analyzer will measure noise 3 dB higher than the actual noise generated by the receiver. Measurement margin is added to the phase noise requirement on the out-of-channel generator to ensure that its noise contribution is much less than the noise generated by the receiver. Requiring the phase noise of the signal generator to be lower than the selectivity of the receiver by the amount of the measurement margin yields more repeatable measurements. Experience has shown that a 10 dB measurement margin is sufficient.

These three factors add up to the actual phase noise specification required for the signal generator. For the EIA standard, a 14 kHz BW receiver with an adjacent channel selectivity of 70 dB for channel spacings of 20 kHz requires a signal generator with specified phase noise of 70 + 42 + 10 = 122 dB below the carrier at a 20 kHz offset from the carrier. It should be noted that this phase noise requirement is for the total or absolute noise on the generator, not the residual noise. For most synthesizers, the absolute noise will be equal to the residual noise at offsets from the carrier equal to channel spacings (20 kHz, for example), but it should be checked for each synthesizer. The difference between absolute and residual noise becomes more pronounced as channel spacings narrow. For a more thorough discussion of absolute versus residual noise, see Chapter 2.

Many high quality receivers specify a selectivity of greater than the 70 dB example, requiring even lower phase noise for these out-of-channel applications than the −122 dBc computed above. It is for these high quality receiver test applications that the 8662A makes major contributions. With specified SSB phase noise at a 10 kHz offset from a 500 MHz carrier of −132 dBc (typically −136 dBc), the 8662A has low enough phase noise to automatically make most stringent measurements. This means both in-channel and out-of-channel measurements can be made with the 8662A in a programmable system. For more information on a Hewlett-Packard programmable system for making receiver measurements, see HP Technical Data for the Model 8953A Semi-Automatic TransceiverTest Set.

Not only can the 8662A automatically make these out-of-channel measurements on receivers with channel spacings of 20 to 50 kHz, but it is also designed for outstanding performance on receivers with narrower channel spacings. As the frequency spectrum becomes more congested, channel spacings will be narrowed, as exemplified by the 12.5 kHz channel spacings now employed in Europe. For many RF signal generators, the phase noise rises very quickly for offsets from the carrier less than 20 kHz. However, the design of the 8662A yields a phase noise spectrum that remains fairly flat into about a 7 kHz offset from the carrier. Thus, as channel spacings become closer (6.25 kHz channel spacings are already proposed), the phase noise of the 8662A will still allow automatic out-of-channel receiver testing.

Spurious performance is also an important criterion for the adjacent channel selectivity test. If a spurious output from the signal generator occurs at an offset from the carrier equal to the receiver channel spacing, the spurious will fall into the receiver IF passband, as shown in Figure 8.3. This will have the effect of reducing the receiver's measured adjacent channel rejection. To prevent this, non-harmonic spurious generated in the signal generator should be attenuated at least below the receiver's adjacent channel rejection. The 8662A specifies non-harmonically related spurious to be greater than 90 dB below the carrier in the primary band of 320 to 640 MHz.

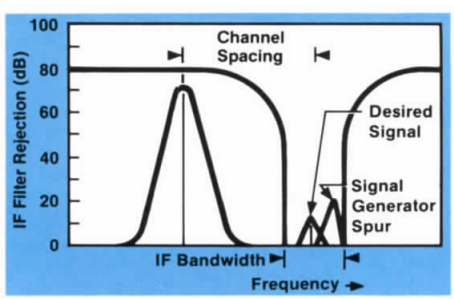

Figure 8.3. Signal generator spurious in adjacent channel test.

Using the 8662A for Spurious Attenuation Testing

A second common out-of-channel test is the spurious attenuation test, a measure of the receiver's ability to discriminate between a desired and an undesired signal. Basically a figure of merit of the input RF filters of the receiver, the test checks if the receiver responds to RF image frequencies, incoming signals at the IF that would feed directly into the audio section, or any other incoming signals that would generate spurious responses within the receiver.

This test, as defined by the EIA (see Figure 8.4), uses one signal generator. With full attenuation switched in (output signal level at least as low as −127 dBm), an unmodulated RF signal is applied at the receiver's channel frequency, and the receiver volume is adjusted for 25% of rated audio output power. The RF level of the signal generator is then increased until the noise output of the receiver is reduced by 20 dB. (This is known as 20 dB quieting.)

The output level of the generator is then increased to its maximum level, and the generator is tuned over the entire frequency range of the receiver, including IF and image frequencies. If the receiver quiets , the level of the signal generator is reduced until the noise output is reduced 20 dB below that with no signal at the input. The ratio of the level of the generator for 20 dB of noise reduction at f_0, the frequency that the receiver is tuned to, and the level of the generator for 20 dB of quieting at the spurious frequency is defined as the "spurious attenuation."

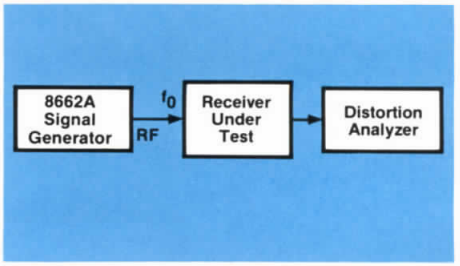

Figure 8.4. Receiver spurious attenuation measurement.

The spurious output of the signal generator is critical for this test because the analyzer cannot distinguish spurious responses of the receiver from spurious outputs of the generator. As shown in Figure 8.5, if a spurious output from the signal generator falls into the receiver IF passband, it will have the same effect as a spurious response in the receiver itself. Therefore, spurs generated in the signal generator should be attenuated at least below the level of the receiver's own spurious attenuation. The low spurious output of the 8662A minimizes the possibility of causing what would appear to be spurious responses of the receiver.

Broadband noise floor is a second aspect of spectral purity that is important for this test. Figure 8.6 shows a large out-of-channel signal "punching through" the IF filter (that is, at a level high enough to exceed the IF rejection), thereby introducing a spurious response in the receiver seen in the IF passband. It is this spurious response that the spurious attenuation test is designed to measure. However, if the signal generator has a high broadband noise floor, the spurious response of the receiver will be masked by the noise of the generator. The phase noise of a signal generator is generally specified in a 1 Hz bandwidth. With a 14 kHz receiver bandwidth, the noise seen by the receiver is 10 log (14 kHz/1 Hz) or 42 dB higher. If the receiver has very good spurious attenuation, the generator must have a very low broadband noise floor. If not, as the RF level of the generator is increased, that part of the generator's noise floor that falls within the tuned bandwidth of the receiver will actually be seen before spurious generated in the receiver, causing the output to always be noisy (Figure 8.6).

The 8662A specifies a broadband noise floor of −146 dBc per Hz (−148 dBc typical) for f_c between 120 and 640 MHz. This noise in a 14 kHz receiver bandwidth will be 42 dB higher, or −108 dB below the carrier, which is sufficient performance for most high-quality receivers specifying 90 or 100 dB spurious attenuation.

Combining outstanding RF specifications, excellent spectral purity, and ease of programming, the 8662A provides all the performance necessary to automate the whole range of receiver tests, both in-channel and out-of-channel.

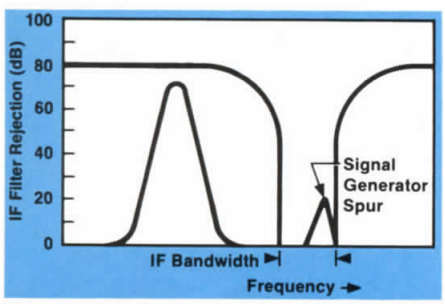

Figure 8.5. Signal generator spurious in spurious attenuation test.

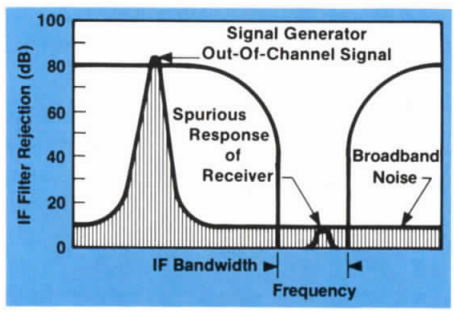

Figure 8.6. Broadband noise floor in spurious attenuation test.

Chapter 9

8662A as an External LO with the HP 8901A Modulation Analyzer

The 8662A can be used as a low-noise substitute local oscillator (LO). In this application, it can significantly improve the stability and performance of other instruments and measurement systems. In particular, the 8662A can be used with the Hewlett-Packard Model 8901A Modulation Analyzer to improve the residual FM of the 8901A.

The 8901A is a calibrated receiver that measures modulation (AM, FM, ϕM), frequency, and power automatically for input frequencies from 150 kHz to 1300 MHz. The 8901A features a low noise local oscillator; therefore, low residual FM is one of its key contributions. However, for some applications — measuring hum and noise on FM mobile transmitters, for example — even lower noise performance may be desired. The 8901A Option 003 allows the 8901A to accept an external local oscillator signal for improved stability and noise performance.

Measured Performance

Figure 9.1 shows how to connect the 8662A as this external LO. Figures 9.2 and 9.3 show typical 8901A residual FM performance using first the 8901A internal LO, then the 8662A as the external LO. The noise when the 8662A is used is as much as an order of magnitude lower than when the internal 8901A local oscillator is used.

Figure 9.2 shows the typical 8901A residual FM performance without any internal filtering. Notice that above 650 MHz the 8662A improves the noise by greater than a factor of 4, reducing the residual FM to ≤40 Hz. Using the 8901A's internal 15 kHz low-pass filter (Figure 9.3) with the 8662A as an external LO holds the residual noise to less than 2 Hz across the entire frequency range, as compared to ≤30 Hz with the 8901A's internal LO.

Notice the effect of frequency on the residual FM of the 8901A. The 8901A's internal LO operates from 320 to 650 MHz. All other frequency ranges are obtained by dividing or multiplying this base band. Therefore the residual noise for $f_c > 650$ MHz is approximately twice that for 320 MHz $< f_c <$ 650 MHz. (For a discussion of the effect of multiplication or division on the noise of a signal, see Chapter 7, "Using the 8662A at Microwave Frequencies.")

The same effect occurs when the 8662A is used as the external LO for analogous reasons. The 8662A's main band is 320 to 640 MHz. Frequencies from 640 to 1280 MHz are obtained by doubling; as a result, the noise in this doubled band is approximately twice that of the base band. Frequencies from 160 to 320 MHz are in the divide-by-2 band; 120 to 160 MHz is the divide-by-4 band. The noise in these bands is therefore one-half and one-fourth that of the main band. Frequencies from 0.01 to 120 MHz are obtained by heterodyning the fundamental band, yielding noise performance similar to the noise of the 320 to 640 MHz range.

Measurement Considerations and Procedure

When the 8662A is used as an external LO for the 8901A, there are several considerations to take into account. Using an external LO requires that the 8901A internal LO be essentially disabled, so that it does not wander and introduce spurious signals into the measurement. This can be accomplished by manually tuning the 8901A LO to a known frequency. Tuning it to the high end is acceptable except when the application is at the upper frequency limit of the 8901A.

To fix the 8901A internal LO at the high end, key in

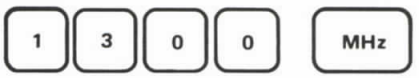

In frequency mode, the 8901A measures input frequency automatically by first counting the internal local oscillator and then the intermediate frequency (IF). The input frequency F_{in} is then calculated from $F_{in} = F_{LO(8901A)} - F_{IF}$. When the 8662A is used as an external LO, the 8901A's internal LO is manually fixed at 1300 MHz; consequently, the standard frequency measurement is invalid. The 8901A can still, however, indirectly count the incoming frequency. Keying

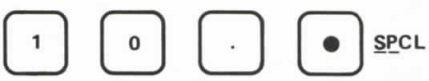

into the 8901A keyboard sets up the 8901A to measure the signal frequency being amplified in the IF (F_{IF}). Then the input frequency can be externally calculated from

$$F_{in} = F_{8662A} - F_{IF}$$

The 8901A operates with two IF frequencies — 1.5 MHz and 455 kHz. The 8662A must be manually set to the proper offset frequency to produce one of these intermediate frequencies in the

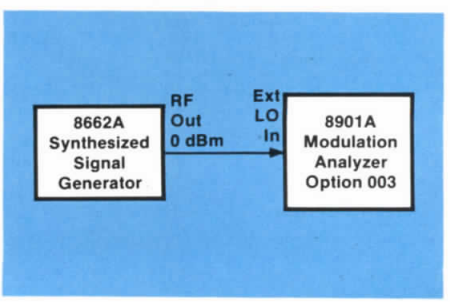

Figure 9.1. 8662A as external local oscillator for HP 8901A.

8901A. In normal operation, it is recommended that the 8662A always be set such that $F_{8662A} > F_{in}$. Set the 8662A to F_{in} +455 kHz for input frequencies from 2 to 10 MHz. For frequencies >10 MHz, the 8662A should be set to F_{in} +1.5 MHz. For increased sensitivity, the 455 kHz IF may also be selected for input frequencies above 10 MHz, but modulation rates and FM deviations are restricted.

Since the 8901A cannot count the input signal unless the IF is in the proper range, the input frequency must be known to within the IF bandwidth in order to set the 8662A to the proper LO frequency. For most transmitter measurements, this is not a problem, since the BW is approximately ±1 MHz for the 1.5 MHz IF, and ±100 kHz for the 455 kHz IF. Once the difference between the input signal and the 8662A LO frequency is within the IF bandwidth, the 8901A can be used to count the incoming frequency with increased resolution. Then the 8662A can be offset by exactly the IF center frequency for optimal performance.

A convenient way to offset the 8662A by the proper 8901A IF frequency is to use the 8662A Special Function 11, "+ Frequency Offset". Special Function 11 makes the actual 8662A output frequency equal to the sum of the frequency shown on the display and the entered offset. Then only the desired signal frequency need be entered into the 8662A, and the necessary frequency offset will be obtained transparent to the operator. For example, if the 1.5 MHz IF is desired, key into the 8662A.

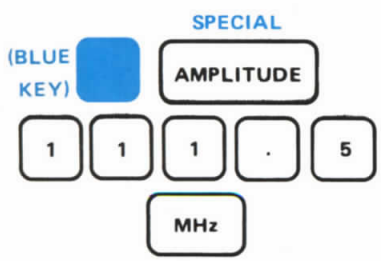

Now, for any measurements on the 8901A, simply key in the input frequency that will be applied to the 8901A input into the 8662A keyboard. The IF offset will be set without any external calculations on the part of the user.

The 8662A can be used as an external LO to improve the noise performance of the 8901A. For more information on the 8901A, see HP 8901A Technical Data and HP Application Note 286-1, Applications and Operation of the 8901A Modulation Analyzer.

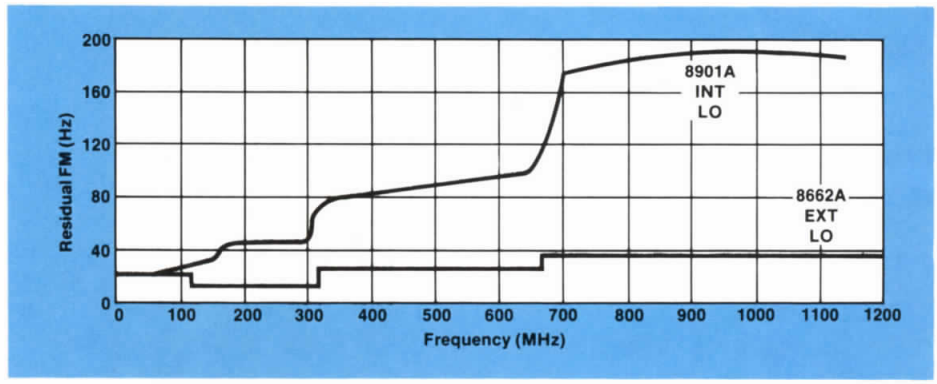

Figure 9.2. 8901A typical residual FM with no filtering.

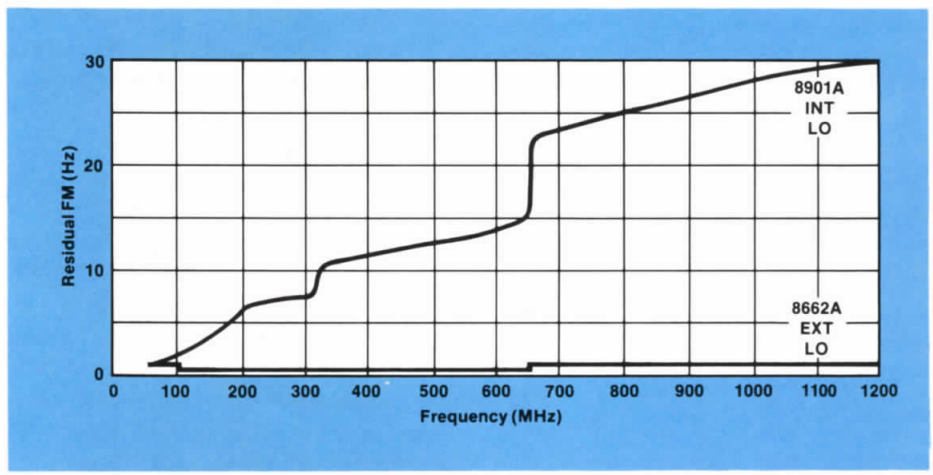

Figure 9.3. 8901A typical residual FM with 15 kHz LPF.

Chapter 10

Using an 8662A with the HP 8505A RF Network Analyzer

Network analyzers are used to measure device transmission and reflection characteristics in terms of magnitude and phase. One of the key components of a network analyzer is the signal source. When devices must be characterized as a function of frequency, particularly over a broad frequency range, sweep oscillators are the usual signal source. For measurements on narrowband devices, or devices whose magnitude and/or phase characteristics change rapidly with frequency, signal generators or synthesizers are preferred because of the improved source residual FM spectrum width and better frequency resolution that they offer.

The Hewlett-Packard Model 8505A RF Network Analyzer Option 005 allows the 8505A to be phase-locked to a synthesizer for increased frequency accuracy and stability when characterizing narrowband devices. The high performance of the 8662A makes it an excellent choice for use as the source with the 8505A. When used with an 8662A in the phase-lock mode, the 8505A will provide crisp CRT displays and high resolution digital readouts of transmission magnitude and delay over swept frequency widths ranging from only a few hertz up to 1 megahertz. In addition to transmission and delay, the 8505A can provide calibrated displays of return loss, reflection coefficient, phase, and deviation from linear phase over its entire 500 kHz to 1.3 GHz frequency range. The 8662A also provides 0.1 or 0.2 hertz center frequency resolution, and can be used with the 8505A Option 005 with no modifications to the 8662A.

Measurement Setup

The 8662A can be configured with the 8505A Option 005 in one of two ways, depending on the desired measurement. Figure 10.1 shows how to set up the 8662A with the 8505A Option 005 for making transmission magnitude and delay measurements. The system can also be configured for making return loss and reflection coefficient measurements. For more detailed instructions on both of these setups and the corresponding operating instructions, refer to the Operating and Service Manual for the 8505A Network Analyzer Option 005 Phase-Lock, Option Supplement Chapter F, Supplement Part Number 08505-90070.

In either test setup, the 8505A generates a maximum of a ±1.3V ramp voltage (the ±ΔF output of the 8505A) that is used to externally frequency modulate the 8662A, yielding a real-time, stable, calibrated swept display on the 8505A. Whenever an external source is used with the 8505A Option 005, it is necessary to calibrate the modulation index of the phase-locked system in order to obtain an accurate measurement of group delay and to allow easy and exact settings of different sweep widths. This is essentially a calibration of the frequency deviation of the external source used.

The external frequency modulation capability of the 8662A greatly simplifies this calibration of the ±Δ F setting. The external modulation input of the 8662A requires a 1V peak signal for specified accuracy, and the ±Δ F output of the 8505A is easily adjusted to this level. However, the ease of calibration of the system is due to the fact that the 8662A has two front panel annunciators which indicate application of a 1V peak signal ±2%. Thus, simply key in the desired frequency deviation on the 8662A (which is the desired sweep width on the 8505A) and adjust the ±Δ F output of the 8505A until the "HI"/"LO" annunciators on the front panel of the 8662A remain extinguished. The deviation and thus the display is then calibrated and accurate to the specifications of the 8662A. In standard operation of the 8505A, these deviations will be ±1.3 kHz (13 MHz range), ±13 kHz (130 MHz range) and ±130 kHz (1300 MHz range). For additional flexibility in trading range and resolution, the 8662A can be set to produce other peak deviations, where the maximum range and resolution are computed by the formulas below. The frequency deviation will retain its specified accuracy as long as the required 1V peak signal is applied.

The 8662A provides for both ac and dc coupling on the external FM input. For very narrowband devices, the dc FM mode will normally be selected, as slow sweep speeds on the 8505A are required. Center frequency stability of the 8662A is somewhat degraded in the dc FM mode (see 8662A Technical Data Sheet for specifications). Therefore, for some applications the ac mode, which allows rates down to 20 Hz might be acceptable, yielding higher frequency stability (±5 x 10^{-10}/day stability.)

$$\text{Maximum Range} = \frac{1.04 \times 10^5}{(\pm\Delta F)}\ \mu s$$

$$\text{Maximum Resolution} = \frac{130}{(\pm\Delta F)}\ \mu s/\text{DIV}$$

Typical Operating Characteristics

The performance of the 8662A yields higher performance network measurements in terms of frequency and output characteristics. The following sections will describe typical performance of a phase-locked system using the 8662A with the 8505A Option 005.

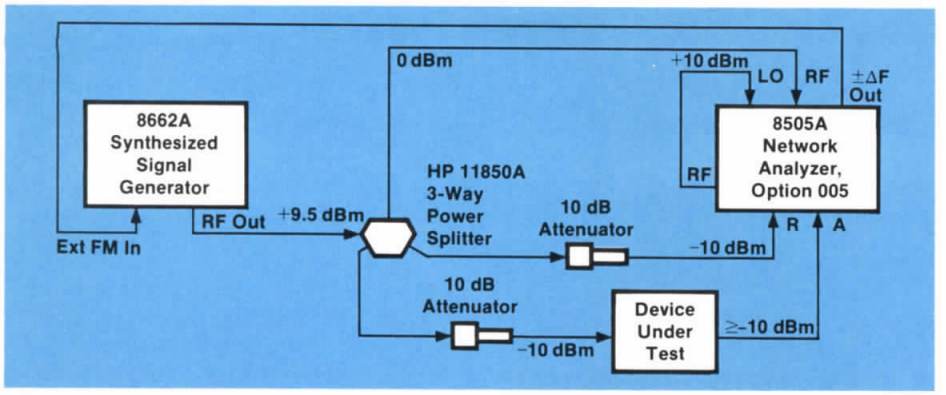

Figure 10.1. 8505A phase-lock test set-up with 8662A.

Frequency characteristics
Range and resolution

Table 10.1. 8505A frequency characteristics when locked to 8662A.

8505A Frequency Range	0.5 to 13 MHz	0.5 to 130 MHz	0.5 to 1300 MHz
CW Resolution (set on 8662A)	0.1 Hz	0.1 Hz	0.2 Hz
±ΔF Resolution (set on 8505A)	1 Hz	10 Hz	100 Hz

NOTE: The maximum ±ΔF is limited by the maximum FM peak deviation allowed on the 8662A at the frequency of interest. For example, for frequencies $0.5 < f < 13$ MHz, the 8662A has specified FM deviations to 100 kHz. Therefore, a ±ΔF of 100 kHz can be used on the 13 MHz range of the 8505A, provided the group delay and electrical length readings are rescaled. Maximum FM peak deviations of the 8662A are listed in Table 10.2 below.

Table 10.2. Specified 8662A FM deviation.

Center Frequency (MHz)	Maximum Peak Deviation	
	ac mode (kHz)	dc mode (kHz)
0.01—120	the smaller of 100 or f_{mod} x 500	100
120—160	25 or f_{mod} x 125	25
160—320	50 or f_{mod} x 250	50
320—640	100 or f_{mod} x 500	100
640—1280	200 or f_{mod} x 1000	200

Typical system residual FM

The total phase noise of the signal source used with the 8505A translates into residual FM. Residual FM limits the rate at which the phase or frequency of the device under test can change and still maintain a stable display. The residual FM of a phase-locked 8505A approaches that of the 8662A, which is less than 0.1 Hz, allowing very sharp filter skirts to be measured.

Output characteristics

Power output, harmonics, spurious outputs, and phase noise of the system are determined by the 8662A. The phase noise of the source used with the 8505A Option 005 can affect the measurement capability. In the measurement of a narrow bandwidth notch filter, the filter may attenuate the carrier but pass noise several kilohertz from the carrier with practically no attenuation. If the noise 200 kHz from the carrier mixes with the 8505A Local Oscillator (LO frequency = RF frequency ±100 kHz) to produce a 100 kHz IF response < −110 dBm, the response will "fill in" the notch, making the attenuation of the notch appear less than its true value. This can effectively limit the dynamic range of the 8505A. The low SSB phase noise of the 8662A minimizes this effect. The SSB phase noise at a 200 kHz offset from the carrier is typically <−136 dBc (f_c = 500 MHz), reducing the possibility of mixing with the LO of the 8505A.

Delay and electrical length characteristics

The delay and electrical length characteristics are primarily a function of the 8505A, and thus are not improved or degraded by use of the 8662A. Refer to the 8505A Option 005 Technical Data Sheet or the Operating and Service Manual for more information on these characteristics.

Chapter 11

Using the 8662A as an Offsettable Source with the HP 5390A Frequency Stability Analyzer

The Hewlett-Packard 5390A Frequency Stability Analyzer automatically measures phase spectral density of signal sources at offsets from the carrier from 0.1 Hz to 10 kHz, with the primary emphasis on offsets less than 100 Hz. The 5390A measures in the time domain using a frequency counter to periodically sample the frequency and relate the variance of a series of measurements to the phase spectral density. This time domain measurement results in a digital filter transfer function with very narrow bandwidth characteristics, which allows measurements to be made very close to the carrier.

The basic 5390A system employs a heterodyne technique to down-convert to a difference frequency the outputs of two oscillators that are offset in frequency. For sources that are not offsettable, a third difference oscillator must be used to produce the difference or "beat" frequency, v_b. In this "Dual Mixer Time Difference" configuration (5390A Option 010), the difference oscillator has specific stability requirements. Most noise constituents of the difference oscillator are common to the two channels and cancel out in the measurement. The one exception where the characteristics of the difference oscillator do limit the measurement sensitivity is white phase noise (the f^0 component of phase spectral density, typically visible at offsets from the carrier of 1 kHz or greater). Therefore, for white noise measurements the difference oscillator must have a lower white noise floor than the unit under test.

The 8662A is an ideal source to use with the 5390A system in the "Dual Mixer Time Difference" configuration. The basic block diagram is as shown in Figure 11.1.

For a standard 5390A system, the maximum sensitivity of the frequency stability analyzer (the smallest level of phase noise that can be measured at a given offset frequency) is a function of beat frequency. When used with the 8662A in the dual mixer time difference configuration, the sensitivity is a function of beat frequency (v_b) only for offsets less than 1 kHz, where the noise of the 8662A is common to both channels. However, for offsets >1 kHz, the sensitivity of the 5390A system is limited by the phase noise of the 8662A. The 8662A's primary contribution when used as the difference oscillator is its low phase noise at offsets > 1 kHz from the carrier in a programmable generator (typically −136 dBc at a 10 kHz offset for a center frequency of 500 MHz), allowing automatic phase noise measurements on devices that cannot be offset. The frequency settability, stability and accuracy also allow ease of operation and more repeatable measurements. For more information on the 5390A, see HP 5390A Technical Data and HP Application Note 225-1, Measurement Considerations When Using the 5390A Option 010.

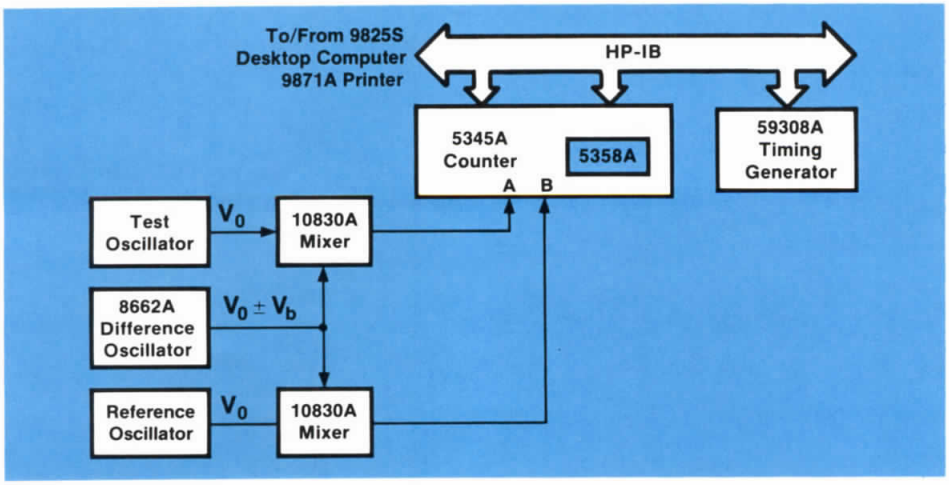

Figure 11.1. Dual mixer time difference set-up (HP 5390A Opt. 010).

Chapter 12

Using the 8662A as a Substitute LO with the HP 8672A Microwave Synthesized Signal Generator

The low phase noise of the 8662A makes it an ideal substitute local oscillator. And because it is tunable over a wide range of frequencies, the 8662A is also an excellent substitute for a variable oscillator such as a voltage-controlled oscillator (VCO). The 8662A can therefore be used as a substitute VCO inside the Hewlett-Packard Model 8672A Microwave Synthesized Signal Generator to improve the 8672A phase noise performance and give higher frequency resolution over the entire output frequency range of 2 to 18 GHz.

System Operation

The 8672A is a microwave synthesized signal generator that derives its output frequency from four phase-lock loops (Figure 12.1). The LFS (Low Frequency Section) loop determines the four least significant digits of the output frequency, while the M/N loop generates the higher-order digits. The outputs from these two loops are inputs to the YTO (YIG-tuned oscillator) loop, a sum loop that translates these inputs directly up to microwave frequencies.

Within the bandwidth of a phase-lock loop, the noise on the output VCO tracks the noise of the reference used. In a sum loop, such as the YTO loop in the 8672A, where two frequencies are used as references, the noise of the output VCO tracks the sum of the noise of the two references.

In the 8672A, the noise on the output of the M/N loop is the primary contributor to the phase noise of the final output signal. As indicated in the block diagram of the YTO loop (Figure 12.2), the output frequency of the M/N loop (177.5 to 197.4 MHz) is multiplied up to microwave (2 to 6.2 GHz) by a harmonic mixing process. The sampler generates harmonics of the output of the M/N loop and mixes them with the microwave output of the YTO to generate a 20 to 30 MHz difference signal. The 20 to 30 MHz output of the sampler thus has the phase noise of the microwave signal generated by multiplying the 177.5 to 197.4 MHz signal. The phase noise on the 20 to 30 MHz output from the LFS loop is added to the noise on this microwave signal, but the noise on the 20 to 30 MHz signal is at a much lower level, as it is generated by effectively multiplying the 10 MHz reference signal by a factor of only 2 to 3. Compared to the noise on the signal at microwave frequency, this noise contribution is negligible. For more information on the block diagram of the 8672A, see Hewlett-Packard Application Note 218-1, Applications and Performance of the 8671A and 8672A Microwave Synthesizers.

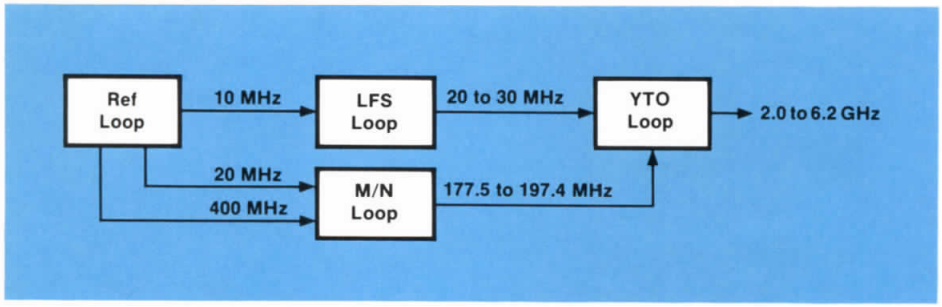

Figure 12.1. HP 8672A phase-lock loops.

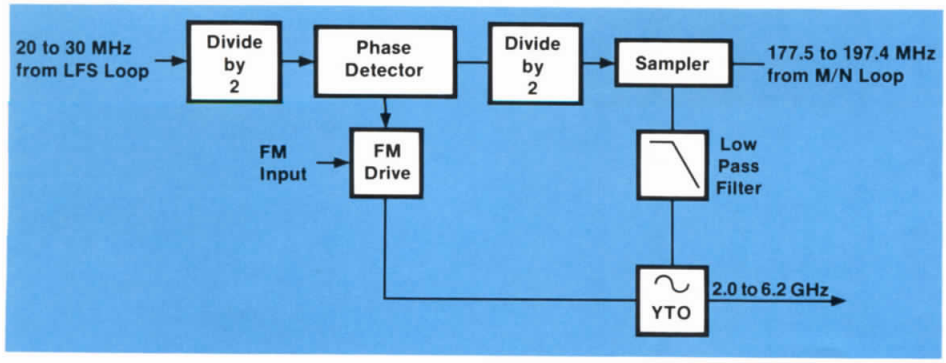

Figure 12.2. 8672A YTO loop.

Within the bandwidth of the YTO loop, the noise of the YTO tracks the phase noise of the multiplied-up signal from the M/N loop. If a very low phase noise signal is substituted for the output of the M/N loop, the improvement in phase noise is translated to the output. Substitution of the 8662A for the M/N loop frequency yields the excellent close-in phase noise performance of the 8662A within the YTO bandwidth of approximately 10 kHz while still providing the good broadband noise performance of the 2 to 6.2 GHz YTO at greater offsets from the carrier.

Hardware Modifications

The necessary modifications to the 8672A are easy to do. They involve sim-

ple cable re-routing to substitute a signal from the 8662A for the M/N loop frequency in the 8672A. Refer to the interior layout photo of the 8672A (Figure 12.3) for location of the necessary cabling.

1. Disconnect green cable from J1 of A2A3.
2. Disconnect cable from "20 MHz OUT" of Reference Loop.
3. Reconnect the green cable that previously went to J1 of A2A3 to the "20 MHz OUT" of Reference Loop.
4. Disconnect the orange/white cable from "M/N OUT" and reconnect it to the 8662A RF output jack.
5. Set the 8662A output level to +4 dBm.
6. Connect the 10 MHz Reference Output from the rear panel of the 8662A to the 8672A External Reference Input.
7. Select EXT REF on the rear panel of the 8672A.

System Performance

Spectral purity

Figure 12.4 shows the measured absolute SSB phase noise of the 8672A at 6 GHz using its internal M/N loop and the phase noise with the 8662A substituted for this loop. Note that the close-in phase noise is improved as much as 20 dB by substitution of the 8662A. The data also clearly shows the relationship between the bandwidth of the YTO phase-lock loop and the resultant phase noise. For offsets from the carrier greater than the bandwidth of the YTO loop (about 10 kHz), the measured phase noise follows the typical phase noise of the 8672A.

Figure 12.5 shows the analogous results for higher frequencies. Note first that the phase noise of the 8672A using its internal M/N loop increases by 6 dB for the 6.2 to 12.4 GHz band, and by 10 dB for the 12.4 to 18 GHz band, over the noise in the 2 to 6.2 GHz band. This increase in noise is the result of YIG-tuned multiplication of the YTO fundamental output frequency. In the same way, the phase noise with the 8662A substituted for the M/N loop frequency increases for the higher output frequency bands of the 8672A.

Also plotted in Figure 12.4 is the typical phase noise of the 8662A multiplied directly up to 6 GHz. Note that a microwave signal generated in this manner has even better close-in phase noise performance, but the broadband noise is degraded. (For more information on how to multiply up and use the 8662A at microwave frequencies, see Chapter 7.) For some applications where the lowest possible phase noise is desired, a multiplied-up 8662A is the best solution. However, this method of obtaining a microwave signal sacrifices some of the benefits of using a signal generator — calibrated and variable output level, for example. Multiplication also severely limits AM performance; only very low depths of modulation can be multiplied without prohibitive distortion. Harmonic and spurious levels also greatly increase when the 8662A is multiplied up in frequency. When these performance parameters cannot be sacrificed, the substitution of the 8662A for the M/N loop in the 8672A provides a better solution. This yields a broad range of 2 to 18 GHz signals with low noise and full modulation and output level capability.

Resolution

The standard frequency resolution of the 8672A is 1 to 3 kHz, dependent on output frequency band. Though this is sufficient for most applications, substitution of the 8662A for the M/N loop output also results in increased resolution. The frequency resolution obtainable varies with output frequency, and is a function of two factors: 1) which harmonic of the 8662A must be mixed with the 2 to 6.2 GHz output of the YTO to yield a 20 to 30 MHz difference signal, and 2) which band the 8672A is operating in. To determine the resolution obtainable it is necessary to examine the frequency algorithm.

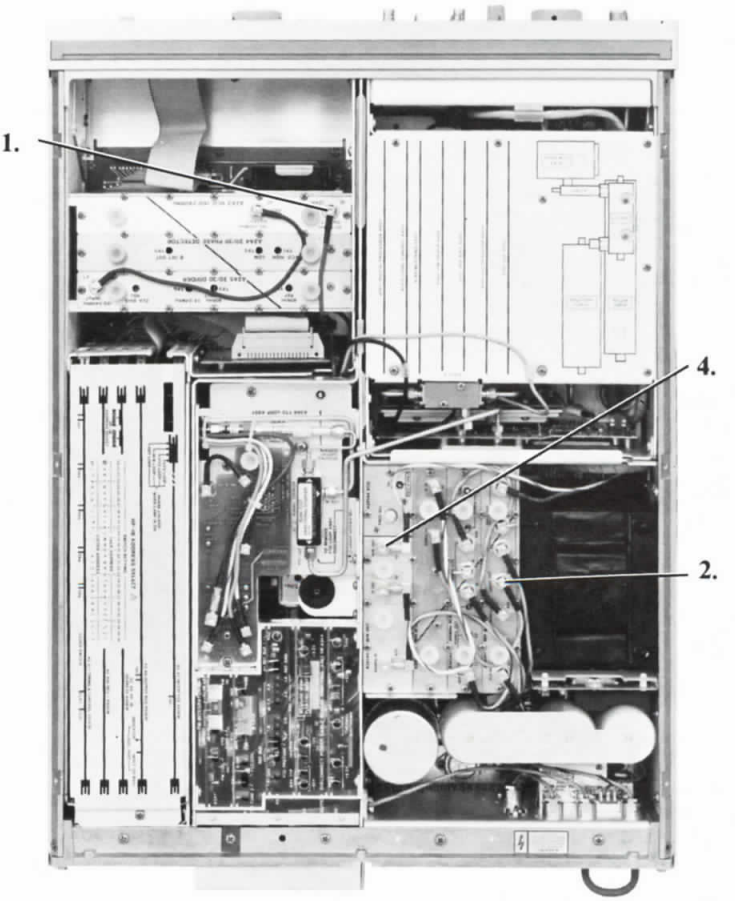

Figure 12.3. 8672A A2A3 board.

Frequency algorithm

For any desired frequency at the output port of the 8672A, the necessary 177.5 to 197.4 MHz signal from the 8662A and the needed 8672A setting can be readily calculated. First, the output band of the desired 8672A signal must be determined. The fundamental frequency band of the 8672A is 2.0 to 6.2 GHz, the range of the YTO in the block diagram of Figure 12.1. The other frequency bands are obtained with a YIG-tuned multiplier, selecting either the second or third harmonic of the fundamental band. Let F be the desired frequency in MHz and B, the output frequency band of the 8672A, where

$$B = \begin{cases} 1, & 2 < F < 6.2 \text{ GHz} \\ 2, & 6.2 < F < 12.4 \text{ GHz} \\ 3, & 12.4 < F < 18.6 \text{ GHz.} \end{cases}$$

Then the frequency that the YTO must tune to is

$$F_{YTO} = \frac{F}{B.}$$

This YTO frequency requires an N in the M/N loop of

$$N = INT\left[\frac{F_{YTO} + 300}{200}\right]$$

where INT(X) is the integer value ≤ the value of X.

The necessary 8662A frequency is then

$$F_{8662A} = \frac{F_{YTO} + 20}{N}$$

and the 8672A should be set to

$$F_{8672A} = INT\left[\frac{F}{10}\right] \times 10.$$

Note: all above frequencies have units of MHz.

The output resolution will then be equal to

(resolution of 8662A) x N x B.

As an example, if the desired 8672A output frequency is 10.5 GHz, B = 2, F_{YTO} = 10.5/2 = 5.25 GHz. Then N = INT [(5250 +300)/200] = INT (27.75) = 27. The 8662A should therefore be set to

$$F_{8662A}\,(MHz) = \frac{5250 + 20}{27} = 195.1851852 \text{ MHz,}$$

and the 8672A tuned to

$$F_{8672A}\,(MHz) = INT\left[\frac{10500}{10}\right] \times 10 = 10500 \text{ MHz.}$$

The resolution on this output signal is 0.1 Hz x 27 x 2 = 5.4 Hz.

Note: When the 8672A is operated in this mode, the "not phase-locked" annunciator on the 8672A remains on. This is because the M/N loop is unlocked, but

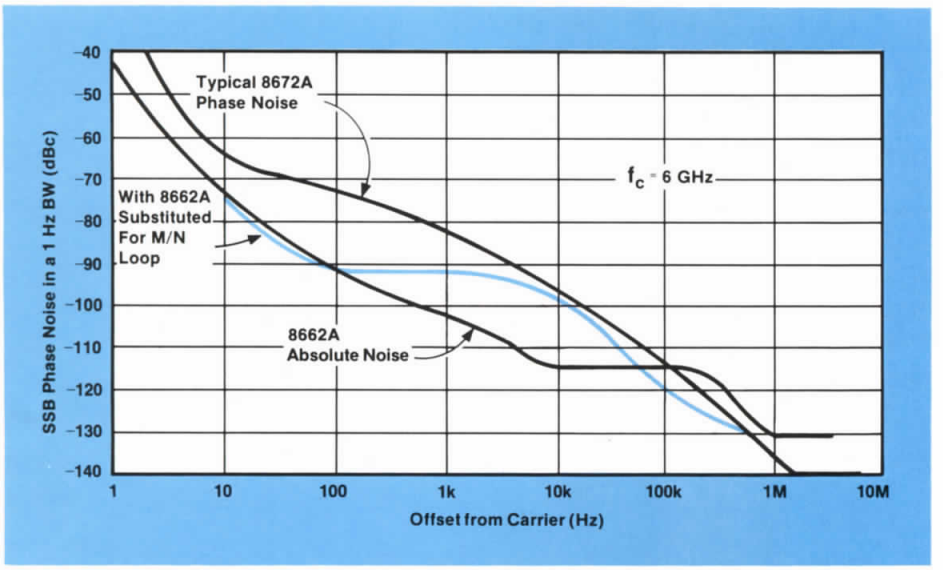

Figure 12.4. Effect of 8662A substitution on 8672A phase noise at 6 GHz.

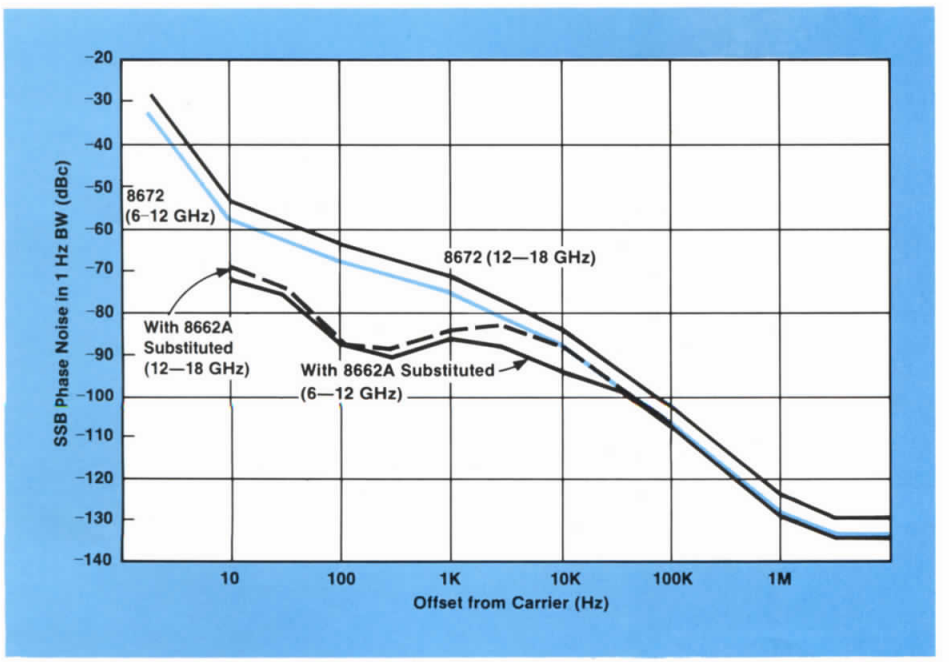

Figure 12.5. Effect of 8662A substitution on 8672A phase noise at 18 GHz.

this loop is not being used to derive the 8672A output frequency. The signal at the 8672A output port is phase-locked if the "REF LOOP", "YTO LOOP", and "LFS LOOP" LED's are glowing on the 8672A A2A7 Interface Assembly Board and if the 8662A does not display a hardware status message.

Modulation

This configuration also allows the 8672A to have increased modulation capability. The standard modulation capability of the 8672A remains unchanged, but the modulation performance of the whole system can be expanded by modulating the 177.5 to 197.4 MHz signal. A standard 8672's FM is limited by modulation index: m must be less than 5 for carrier frequencies from 2 to 6.2 GHz, less than 10 from 6.2 to 12.4 GHz, and less than 15 from 12.4 to 18 GHz. However, because any frequency modulation on the 177.5 to 197.4 MHz signal is translated with the signal up to microwave frequency by the YTO loop, it is possible to frequency modulate the carrier with a very high modulation index.

It is possible to FM at rates up to the YTO loop bandwidth, approximately 10 kHz. Frequency modulation is limited by the ability of the YTO loop to respond, and at low rates peak deviations in excess of 1 MHz are possible (Figure 12.6). Switching the 8672A to the FM mode (with no modulation input to the 8672A) allows the FM OVERMOD indicator on the front panel to be used to determine if the frequency deviation applied to the 177.5 to 197.4 MHz signal is so large the YTO loop cannot respond properly. For modulation applied to the substituted M/N loop frequency, there is no FM meter indication on the 8672A.

The 8662A for output frequencies between 177.5 and 197.4 MHz allows peak deviations up to the smaller of 50 kHz or up f_{mod} x 250. However, the frequency deviation set on the 8662A gets translated up in the YTO loop. The deviation on the 8672A output signal is then equal to the deviation set on the 8662A x N x B. For low rates, this yields frequency modulation with a very high modulation index.

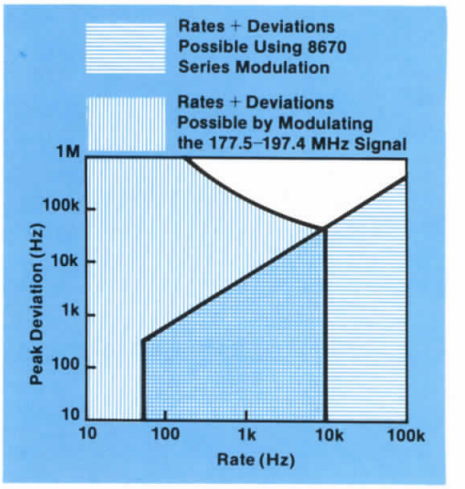

Figure 12.6. Increased FM performance with 8662A substitution.

Appendix A

Calculation of Phase Noise of Three Unknown Sources

Given three unknown sources: 1, 2, and 3.

Using the two source technique, measure each source against each other source in three measurements, yielding

P_{12} = $\mathcal{L}$ measured of sources 1 and 2 in dBc

P_{23} = $\mathcal{L}$ measured of sources 2 and 3 in dBc

P_{13} = $\mathcal{L}$ measured of sources 1 and 3 in dBc.

The phase noise performance of each source may be calculated from the following formulas:

$$\mathcal{L}_1 \text{ in dBc} = 10 \log \left[\frac{10^{\frac{P_{12}}{10}} + 10^{\frac{P_{13}}{10}} - 10^{\frac{P_{23}}{10}}}{2} \right]$$

$$\mathcal{L}_2 \text{ in dBc} = 10 \log \left[\frac{10^{\frac{P_{12}}{10}} + 10^{\frac{P_{23}}{10}} - 10^{\frac{P_{13}}{10}}}{2} \right]$$

$$\mathcal{L}_3 \text{ in dBc} = 10 \log \left[\frac{10^{\frac{P_{13}}{10}} + 10^{\frac{P_{23}}{10}} - 10^{\frac{P_{12}}{10}}}{2} \right]$$

Appendix B

10 MHz Low Noise Bandpass Amplifier

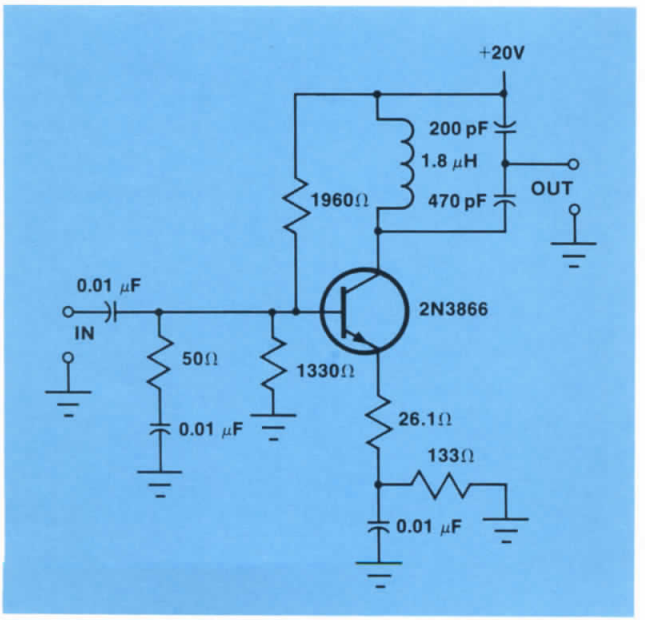

Hewlett-Packard assumes no responsibility for the use of any circuits described herein and makes no representations or warranties, express or implied, that such circuits are free from patent infringement.

Appendix C

Low Noise Amplifier

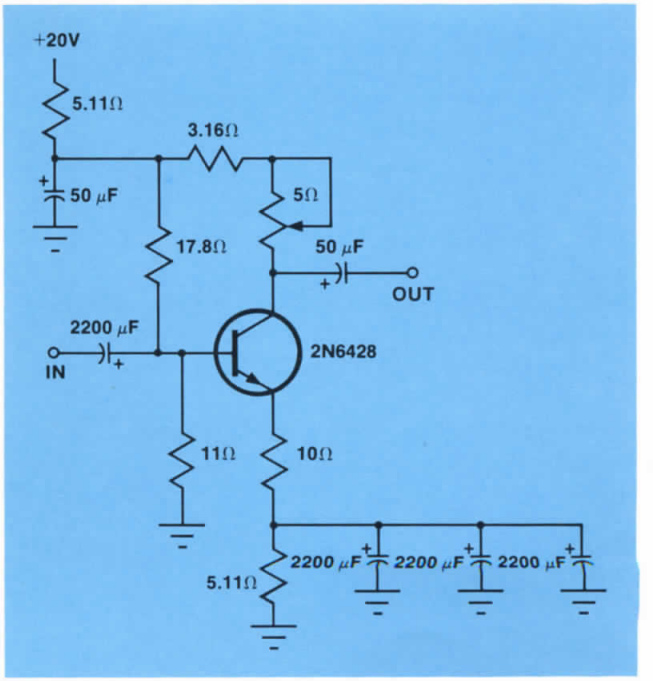

Appendix D

References

Hewlett-Packard Application Notes

AN 207 Understanding and Measuring Phase Noise in the Frequency Domain

AN 150-4 Spectrum Analysis . . . Noise Measurements

AN 270-2 Automated Noise Sideband Measurements Using the HP 8568A Spectrum Analyzer

AN 225 Measuring Phase Spectral Density of Synthesized Signal Sources Exhibiting f^0 and f^{-1} Noise Characteristics with the 5390A Frequency Stability Analyzer

AN 286-1 Applications and Operation of the 8901A Modulation Analyzer

AN 218-1 Applications and Performance of the 8671A and 8672A Microwave Synthesizers

AN 246-2 Measuring Phase Noise with the HP 3585A Spectrum Analyzer

AN 983 Comb Generator Simplifies Multiplier Design

AN 225-1 Measurement Considerations when Using the 5390A Option 010

Other References

1. D. Scherer (H-P), "Design Principles and Test Methods of Low Phase Noise RF and Microwave Sources", Hewlett-Packard RF and Microwave Symposium, October 1978. (Also edited version in *Microwaves,* "Today's Lesson — Learn about Low-Noise Part I, pp. 116-122, April 1979, Part II, pp. 72-77, May 1979.)

2. *Hewlett-Packard Journal,* February 1981, Volume 32, No. 2.

3. Fischer, M. (H-P), "Frequency Stability Measurement Procedures", presented at the 8th Annual Precision Time and Time Interval Meeting, December 1976.

4. A.L. Lance, W.D. Seal, F.G. Mendoza, and N.W. Hudson (TRW), "Automated Phase Noise Measurements", *Microwave Journal,* June 1977.

5. "Frequency Domain Stability Measurements: A Tutorial Introduction", David A. Howe, N.B.S. Technical Note 679, National Bureau of Standards, Boulder Colorado, 80302, 1976.

6. McNamee, M. (H-P), "Automate for Improved Phase Noise Measurement", *Microwaves,* May 1979.

7. Giacoletto, L., "*Electronics Designer's Handbook*", Second Edition, McGraw-Hill, 1977, pp. 26-32.

8. D. Scherer (H-P), "Generation of Low Phase Noise Microwave Signals", HP RF and Microwave Measurement Symposium, May 1981.

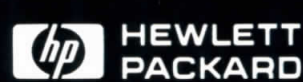

5952-8203 November, 1981 Printed in U.S.A.