5345 ELECTRONIC COUNTER

HEWLETT hp PACKARD

MEASURING FM PEAK-TO-PEAK DEVIATION

This application note describes a calculator based HP Interface Bus system which accurately measures the peak-to-peak frequency deviation of a frequency modulated signal. The system uses the plug-in capability and high resolution of the 5345 Electronic Counter and the computational power of the calculator to measure deviations in the 100 MHz to 500 MHz range. For example, at a carrier frequency of 120.8 MHz, the system can measure 50 kHz deviations to better than one percent for sinusoidal modulation frequencies as high as 100 kHz. The system is almost completely automatic, thereby enhancing accuracy and ease of operation. Use of the HP Interface Bus ensures that the instruments need not be dedicated to a particular configuration (as in the case of hard-wired systems). The bus allows instruments to be quickly and easily reconfigured to meet the changing requirements of production, R&D, or quality control.

APPLICATION NOTE 174-8

hp

INTRODUCTION

The method employed in this note to measure the peak-to-peak frequency deviation of an FM signal uses the 5345A Electronic Counter to make a large number of "instantaneous" frequency measurements from which the minimum and maximum values are selected. The problem encountered with this method arises from the frequency averaging which results from the finite gate time of the counter. Hence, the maximum and minimum frequencies as measured by the counter will be less than the actual values by an amount determined by the ratio of the counter gate time (τ_g) to the period of the modulating signal (τ_m). It can be shown that this degradation is of the form

$$\frac{\sin(\pi\,\tau_g/\tau_m)}{\pi\,\tau_g/\tau_m}$$

when the modulating signal is sinusoidal. Figure 1 shows the ratio of measured to actual peak-to-peak frequency deviation as a function of τ_g/τ_m when the modulating signal is sinusoidal. To minimize this problem, the program used in this application note has a correction factor subroutine which may be used to correct for finite averaging times. To obtain meaningful results from the correction scheme, the modulation signal must be sinusoidal, of known frequency, and with a period not equal to the gate time.

Since the frequency deviation is typically small compared to the RF carrier, the gate time must be relatively large in order to obtain the resolution required for the counter to detect changes in the lesser significant digits. However, the large gate time increases the averaging which masks the frequency peaks. This problem can be greatly reduced by down converting

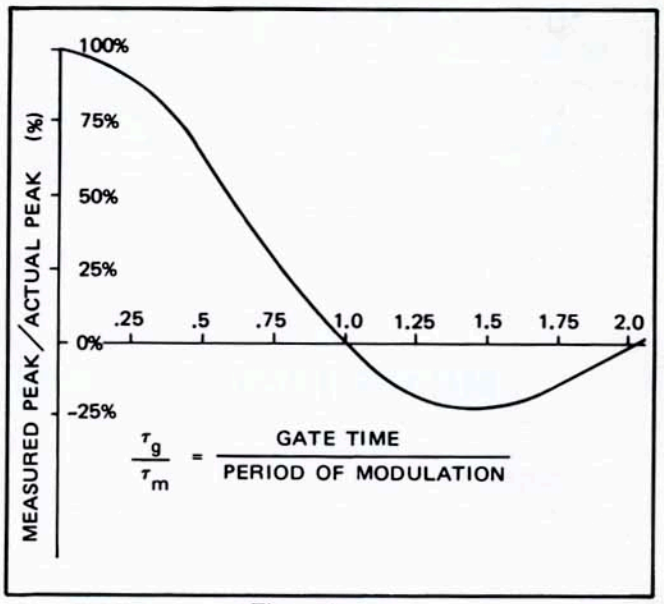

Figure 1

the modulated carrier. This is done by using the 5253A Frequency Converter (100 MHz—500 MHz) and the 10590A Plug-in Adapter. The counter counts the IF output of the 5253A which passes the frequency deviation unaffected. Since the deviation is now a greater fraction of the measured frequency, a smaller gate time may be used to obtain the required resolution.

Figure 2 shows the performance of the measurement system for 100 kHz peak-to-peak deviation. With a constant 100 kHz peak-to-peak deviation FM signal into the 5253A (carrier frequency = 120.8 MHz), the measured peak-to-peak deviation is plotted as a function of modulating frequency for both the corrected and uncorrected case.

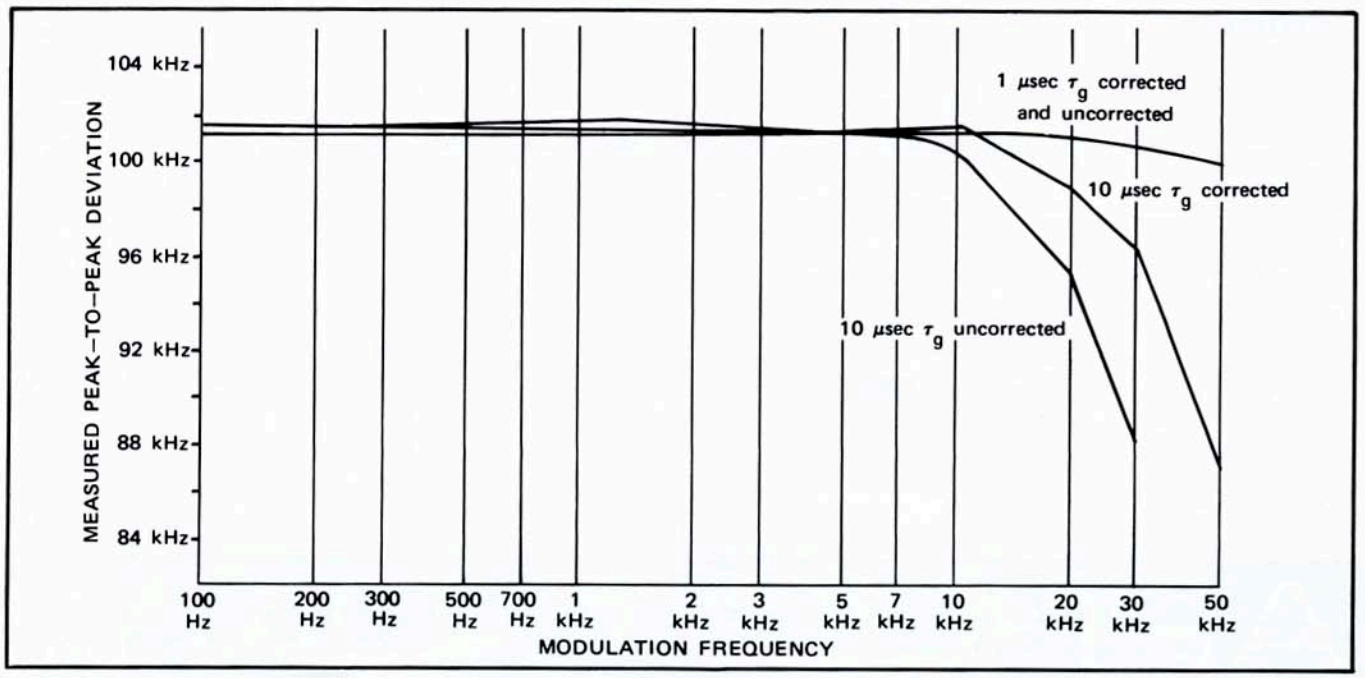

Figure 2

MEASUREMENT SET-UP

The measurement system consists of the 5345A Electronic Counter (Opt. 011), the 9820A Calculator (Opt. 001 Extended Memory), the ASCII Bus Interface Card and PCII ROM (both included in 10593A), 11221A Math ROM, 11220A PCI ROM, 10590A Plug-in Adapter, and 5253A Frequency Converter Plug-in. The instruments are connected as shown in Figure 3.

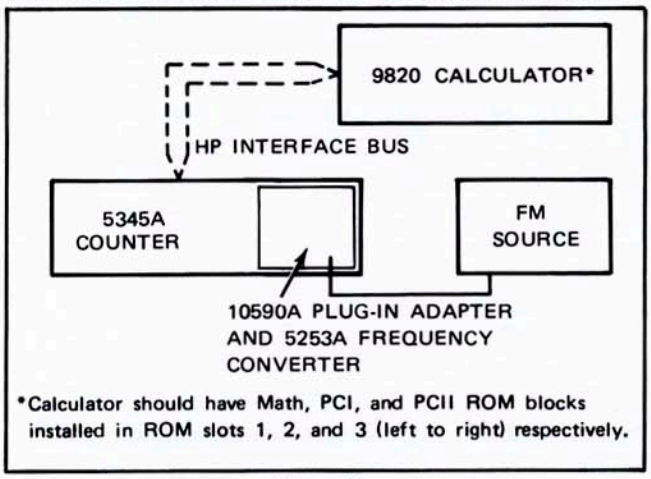

Figure 3

Since the 9820A Calculator remotely controls all front panel controls of the counter, there is no need to set these controls to any particular positions. The 5345A Electronic Counter is interfaced to the 9820A Calculator in the following manner: plug the ASCII Bus Interface card into any of the four slots on the rear panel of the 9820A Calculator; connect an ASCII Interface Cable (10631A, B, or C) from the interface card of the calculator to the rear panel plug of the 5345A Electronic Counter.

Set the Talk/Listen address on the frequency counter as specified in the following table:

Table 1

	Talk/Listen Address	Mode Switch	A5	A4	A3	A2
5345A Counter	J/*	addressable	0	1	0	1
9820A Calculator	U/5	address set at factory.				

These switches are located on the rear panel of the instrument and must be set so as to agree with the Talk/Listen address in the program.

OPERATION

Connect the FM signal to the 5253A Frequency Converter input. Switch the 5345A function switch to "PLUG-IN" and adjust the Frequency Converter until the IF frequency as measured by the counter is between 100 kHz + peak deviation and 10 MHz (the plug-in IF pass band) and the converter indicator needle points in the green. In general, at least two and sometimes three positions of the converter dial will yield measurable frequencies. The dial setting which gives the lowest IF frequency and still keeps (f_{IF} - Δf_{peak}) greater than 100 kHz should be chosen since this results in the greatest resolution.

Key into the calculator the listed program. The program will request the following parameters:

1. "MOD FREQ" — enter the modulation frequency in Hz. If the frequency is not known or if the modulation is not sinusoidal, enter 0. This will cause the program to bypass the correction subroutine.
2. "NO. OF SAMPLES" — enter the number of samples to be taken, from which the minimum and maximum frequencies are selected.

The program then makes the requested number of measurements with a gate time of 10 μsec. The minimum and maximum values are selected. If the modulating frequency was entered, the peak-to-peak deviation is corrected by the factor

$$\frac{(\pi\ \tau_g/\tau_m)}{\sin(\pi\ \tau_g/\tau_m)}$$

The peak-to-peak deviation in Hz is printed by the calculator printer.

MEASUREMENT CONSIDERATIONS

a) Since the measurement is statistical in nature, the greater the number of measurements, the greater the confidence level that the measured peaks equal the actual peaks. Table 2 shows confidence levels as a function of the number of samples for sinusoidal modulation. The chart, of course, can not take into account the masking effect due to finite gate time. There is no limit as to the number of measurements which may be requested.

b) Since the IF bandwidth of the frequency converter plug-in is 100 kHz to 10 MHz, care must be taken to ensure that the instantaneous frequency does not exceed these bounds. For example, if measuring a 200 kHz peak-to-peak deviation, the IF frequency should be at least 200 kHz.

c) The program can also measure small deviations. However the FM 3 dB bandwidth (the modulating frequency at which the measured peak deviation is 70.7% of the actual peak) may be decreased if the gate time is increased. For example, at 100.2 MHz a ±5 kHz deviation could be resolved to 1% and the uncorrected bandwidth would be

44 kHz. If the carrier frequency were such as to give a 10 MHz IF (worst case), then the gate time could be increased to 100 μsec to give a 4.4 kHz uncorrected FM bandwidth (B ≅ 1/2.26 τ_g) and a resolution of 10%. This example shows the utility of adjusting, if possible, the carrier frequency to a few hundred kHz above an integer multiple of 10 MHz.

Table 2

Probability of Being Within x% of Peak (Sinusoidal Modulation)	Number of Samples			
	10	100	1000	10,000
.001%	.0017	.1297	.9775	1**
.01%	.0161	.5754	.9999987	1**
.1%	.1261	.9595	1**	1**
1%	.6011	.99999952	1**	1**
10%	.9950	1**	1**	1**

***Rounded to 8 digits.*

Program Flow Diagram

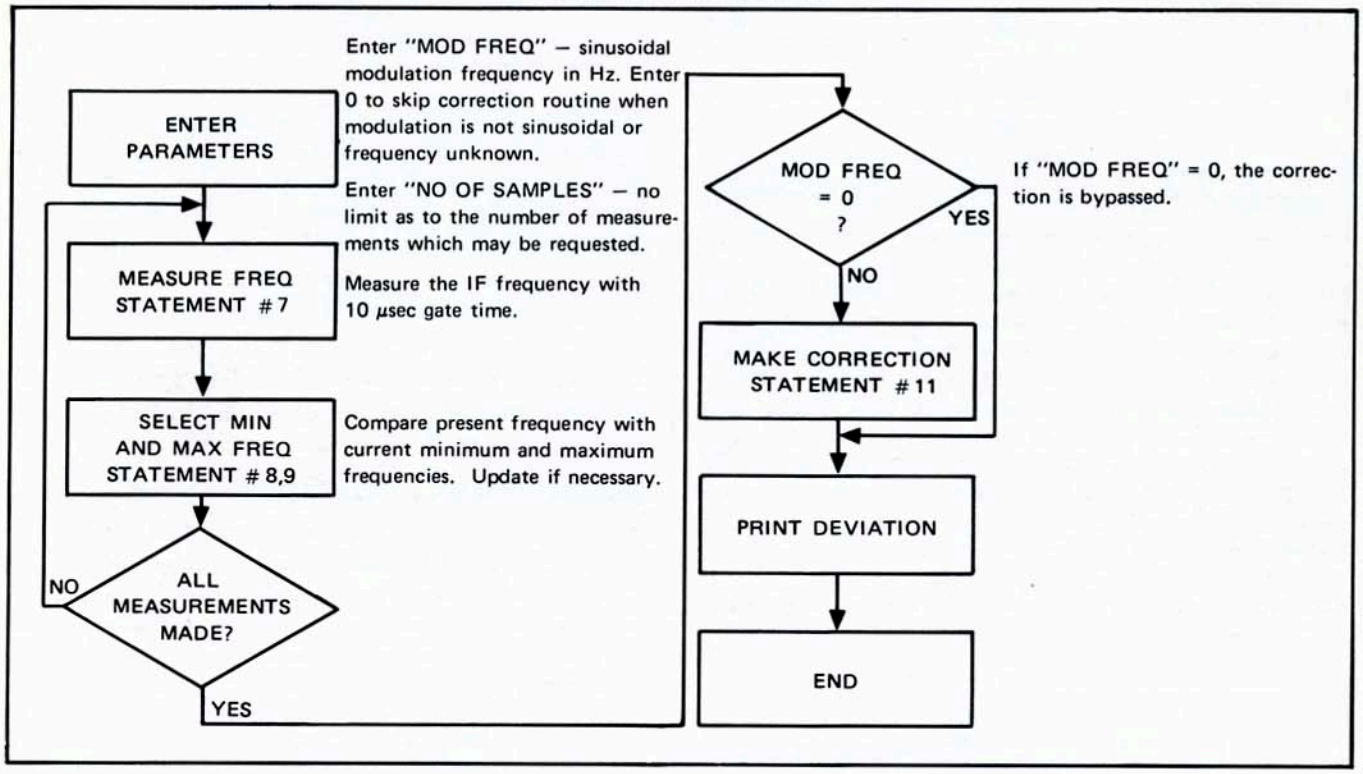

Program Listing

```
0:                    G;"⊢
ENT "MOD FREQ ";4:
Y⊢                    IF Y≠0;πR3/Y→R4⊢
1:                    5:
ENT "NO. OF SAMP0→A;9E99→C;-9E99
LES",R0;CMD "U?*→B⊢
","I2E89:I1","?"6:
;TBL 2;DSP ⊢          IF Y≠0;SIN R4/R4
2:                    →R5⊢
CMD "U?*","F2";       7:
IF Y≠0;1/Y→Y⊢         "DF";CMD "U?*","
3:                    J1","J?5";FMT *;
1E-5→R3;CMD "","      RED 13,R2;A+1→A;
IF A>R0;GTO "C1"
⊢                     12:
8:                    B-C→X⊢
IF R2>B;R2→B⊢         13:
9:                    "OUT";FLT 4;PRT
IF R2<C;R2→C⊢         "P-P DEV=  ",X⊢
10:                   14:
GTO "DF"⊢             END ⊢
11:                   R378
"C1";IF Y≠0;(B-C
)/R5→X;GTO "OUT"
⊢
```

For more information, call your local HP Sales Office or East (201) 265-5000 • Midwest (312) 677-0400 • South (404) 436-6181 • West (213) 877-1282. Or, write: Hewlett-Packard, 1501 Page Mill Road, Palo Alto, California 94304. In Europe, Post Office Box 85, CH-1217 Meyrin 2, Geneva, Switzerland. In Japan, Yokogawa-Hewlett-Packard, 1-59-1, Yoyogi, Shibuya-Ku, Tokyo, 151.

025952-0885

PRINTED IN U.S.A.