5345 ELECTRONIC COUNTER

HEWLETT hp PACKARD

MEASURING THE TRANSFER CHARACTERISTIC OF A VOLTAGE CONTROLLED OSCILLATOR

This application note describes the use of the HP 5345 Electronic Counter in a calculator based HP Interface Bus system to automatically measure and plot the transfer characteristic (frequency out as a function of voltage in) of a voltage controlled oscillator. The system is fast, accurate, and economical. Since the system is calculator based and completely automatic, measurement time is much less than that required to perform the same measurements manually (less than 10 seconds for measurements and plot). Using the calculator for computation and control ensures greater repeatability and accuracy since the opportunity for technician error is greatly reduced. Use of the HP Interface Bus ensures that the instruments need not be dedicated to a particular configuration (as in the case of hard-wired systems). The bus allows instruments to be quickly and easily reconfigured to meet the changing requirements of production, R & D, quality control.

APPLICATION NOTE 174-1

hp

MEASUREMENT SET-UP

The measurement system consists of the 5345A Electronic Counter (Opt. 011), the 9820A Calculator (Opt. 001 Extended Memory), the ASCII Bus Interface Card and PCII ROM (both included in 10593A), 11221A Math ROM, 11220A PCI ROM, 9862A Calculator Plotter (Opt. 20) and 59303A Digital to Analog Converter. The instruments are connected to the calculator as shown in Figure 1.

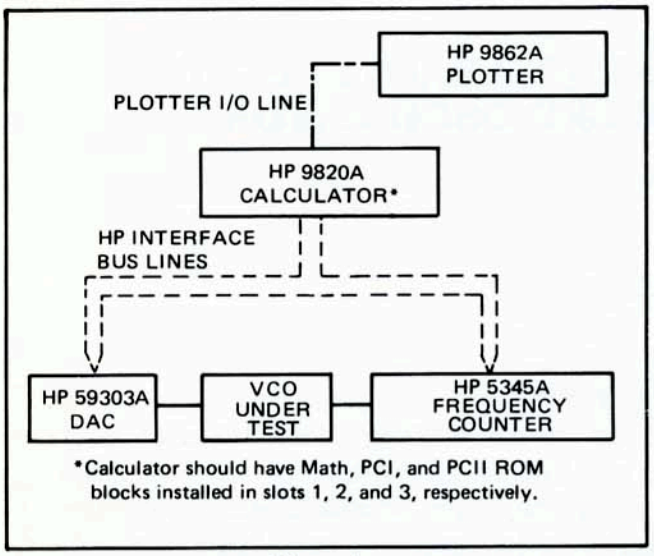

Figure 1.

Since the 9820 calculator remotely controls all front panel controls of the D to A converter and frequency counter, there is no need to set these controls to any particular positions. The calculator is electrically interfaced to the 59303 DAC and the 5345A Frequency Counter by connecting ASCII interface cables (10631 A, B, or C) from the rear panel mounted ASCII bus interface card of the calculator to the rear panel plugs of the DAC and frequency counter. Connect the 9862A plotter I/O card into one of the three remaining rear panel slots of the 9820 Calculator. (The ASCII Interface Card is plugged into the fourth slot — it doesn't matter which slots are used.)

Set the Talk/Listen addresses on the DAC and the frequency counter as specified in the following table:

Table 1

	Talk/Listen Addresses	Mode Switch	A5	A4	A3	A2
59303 DAC	/ = (program) / < (data)	addressable	1	1	1	0
5345 Counter	J/*	addressable	0	1	0	1

These switches are located on the rear panel of the instruments and must be set so as to agree with the Talk/Listen addresses in the program.

OPERATION

To perform a measurement of a VCO transfer characteristic, key into the calculator the program listed. The program will request values for the minimum and maximum dc voltage to be applied to the VCO under test (not to exceed the range of the 59303: -9.99 to +9.99 volts dc). The program also requests the voltage step size to be used in going between these limits. After entering each requested parameter through the 9820 keyboard, press RUN PROGRAM.

Under control of the calculator, the DAC presents a dc voltage to the VCO. The 5345 Frequency Counter measures the VCO output frequency and inputs this value to the calculator. The calculator outputs the voltage and measured frequency to the plotter. This process continues until the requested voltage range has been spanned and the plot of VCO transfer characteristic has been generated. The following plot was generated by this program using the HP 3310A Function Generator as the VCO.

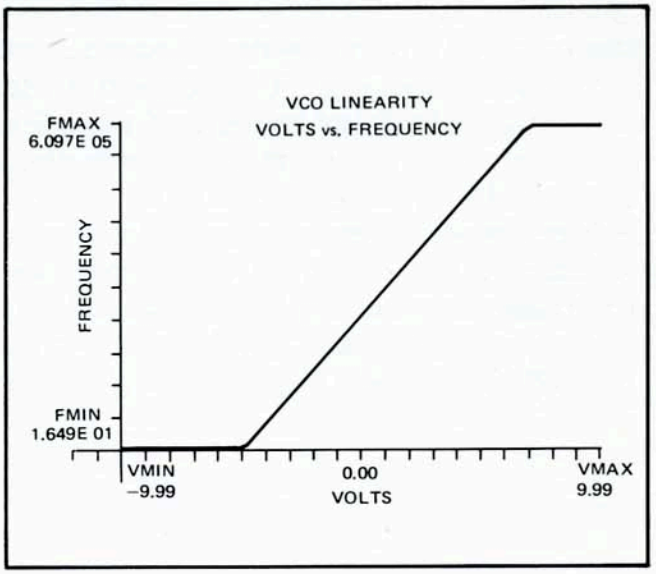

Figure 2 This plot of the transfer characteristic of an HP 3310A Function Generator was automatically generated in less than 10 seconds (1 min. including axes and labeling) by using the HP 5345 Frequency Counter, HP 9820 Calculator, and the HP 59303 Analog-to-Digital Converter.

MEASUREMENT CONSIDERATIONS

a) The gate time programmed for the 5345A Counter must be of sufficient duration to give the desired resolution. Since the worst case resolution of the counter is 1 part in 10^8 per second of gate time, a 100 msec gate time, for example, would allow the counter to resolve a 100 kHz input frequency to ±.01 Hz. The supplied program instructs the 5345A to make measurements with a 100 msec gate time.

b) The accuracy and resolution of measurements made with this set-up is limited by the 59303 DAC. Its accuracy is specified as ±.1% FS over the temperature range of 0° to 55°C. Typically, however, under room temperature conditions, the accuracy is ±.02% FS. For those cases where DAC error becomes significant (e.g., obtaining a high resolution plot over a narrow voltage range), the error may be essentially eliminated by using the bus compatible HP 3490A Multimeter to measure the DAC output and input this to the calculator for use in computations. Of course, the program would have to be modified to enable the calculator to control the multimeter.

c) Since the minimum step size possible with the DAC is 10 mV, the STEP SIZE entered into the program should be an integer multiple of 10 mV so as to avoid errors caused by rounding.

d) For production testing, the plot could be suppressed and only used when a VCO's transfer characteristic exceeded specified limits. This would decrease measurement time to a few seconds.

Program Flow Diagram

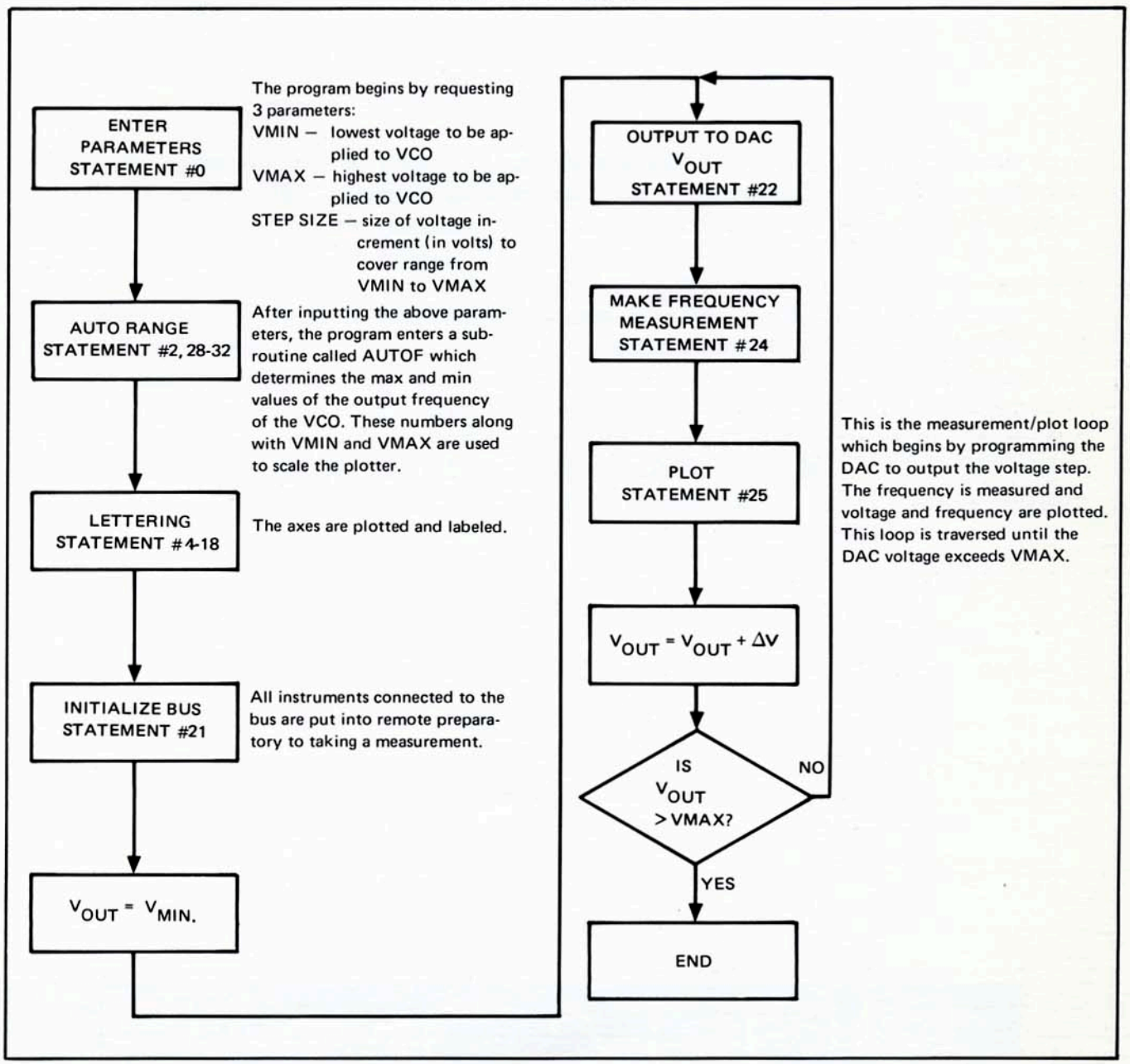

Program Listing

```
0:
ENT "VMIN",R0;
ENT "VMAX",R1;
ENT "STEP SIZE",
A⊢
1:
(R1-R0)/20→C⊢
2:
GSB "AUTO F"⊢
3:
(R5-R4)/10→X⊢
4:
SCL R0-2C,R1,R4-
X,R5⊢
5:
AXE R0,R4,C,(R5-
R4)/10⊢
6:
LTR -.5C+R0,.45(
R5-R4)+R4,322;
PLT "FREQUENCY"⊢
7:
LTR -1.25C+R0,.9
7(R5-R4)+R4,211;
IF FLG 4=0;PLT "
FMAX"⊢
8:
FLT 3;LTR -2C+R0
,.94(R5-R4)+R4;
PLT R5⊢
9:
LTR -1.25C+R0,.0
6(R5-R4)+R4,211;
PLT "FMIN"⊢
10:
LTR -2C+R0,.03(R
5-R4)+R4;PLT R4⊢
11:
LTR .45(R1-R0)+R
0,R4-X,321;PLT "
VOLTS"⊢
12:
LTR .95(R1-R0)+R
0,-.3X+R4,211;
PLT "VMAX"⊢
13:
FXD 2;LTR .95(R1
-R0)+R0,-.6X+R4;
PLT R1⊢
14:
LTR .015(R1-R0)+
R0,-.3X+R4,211;
PLT "VMIN "⊢
15:
LTR .015(R1-R0)+
R0,-.6X+R4;PLT R
0⊢
16:
LTR 9.65C+R0,-.3
X+R4;PLT 10C+R0⊢
17:
LTR .25(R1-R0)+R
0,R5-.3X,421;
PLT "VCO LINEARI
TY"⊢
18:
LTR .25(R1-R0)+R
0,-.7X+R5,211;
PLT "VOLTS VS FR
EQUENCY"⊢
19:
"M";GSB "MEAS"⊢
20:
DSP "END OF PLOT
";GTO 0;STP ⊢
21:
"MEAS";CMD "U?*"
,"I2E9;8I1G?";
DSP ;CMD "J?",""
,"U?=","E0";R0→B
⊢
22:
"LOOP";CMD "U?≤"
;FMT FXD *.0;
WRT 13,100*B⊢
23:
CMD "U?0";FMT
FXD *.2;WRT 13,B
⊢
24:
CMD "U?*","J1","
J?35";FMT *;RED
13,R6⊢
25:
PLT B,R6⊢
26:
B+A→B;IF B>R1;
PEN ;LTR R1,R5;
RET ⊢
27:
GTO "LOOP";IF
FLG 0;STP ;CFG 0
⊢
28:
"AUTO F";CMD "U?
*","I2E89;G?I1";
DSP ;CMD "J?",""
,"U?=","E0"⊢
29:
CMD "U?≤";FMT
FXD *.0;WRT 13,1
00*R0⊢
30:
CMD "U?*","J1","
J?5";FMT *;RED 1
3,R4⊢
31:
CMD "U?≤";FMT
FXD *.0;WRT 13,1
00*R1⊢
32:
CMD "U?*","J1","
J?5";FMT *;RED 1
3,R5;RET ⊢
33:
END ⊢
R281
```

For more information, call your local HP Sales Office or East (201) 265-5000 • Midwest (312) 677-0400 • South (404) 436-6181 • West (213) 877-1282. Or, write: Hewlett-Packard, 1501 Page Mill Road, Palo Alto, California 94304. In Europe, Post Office Box 85, CH-1217 Meyrin 2, Geneva, Switzerland. In Japan, Yokogawa-Hewlett-Packard, 1-59-1, Yoyogi, Shibuya-Ku, Tokyo, 151.

025952-0878

PRINTED IN U.S.A.