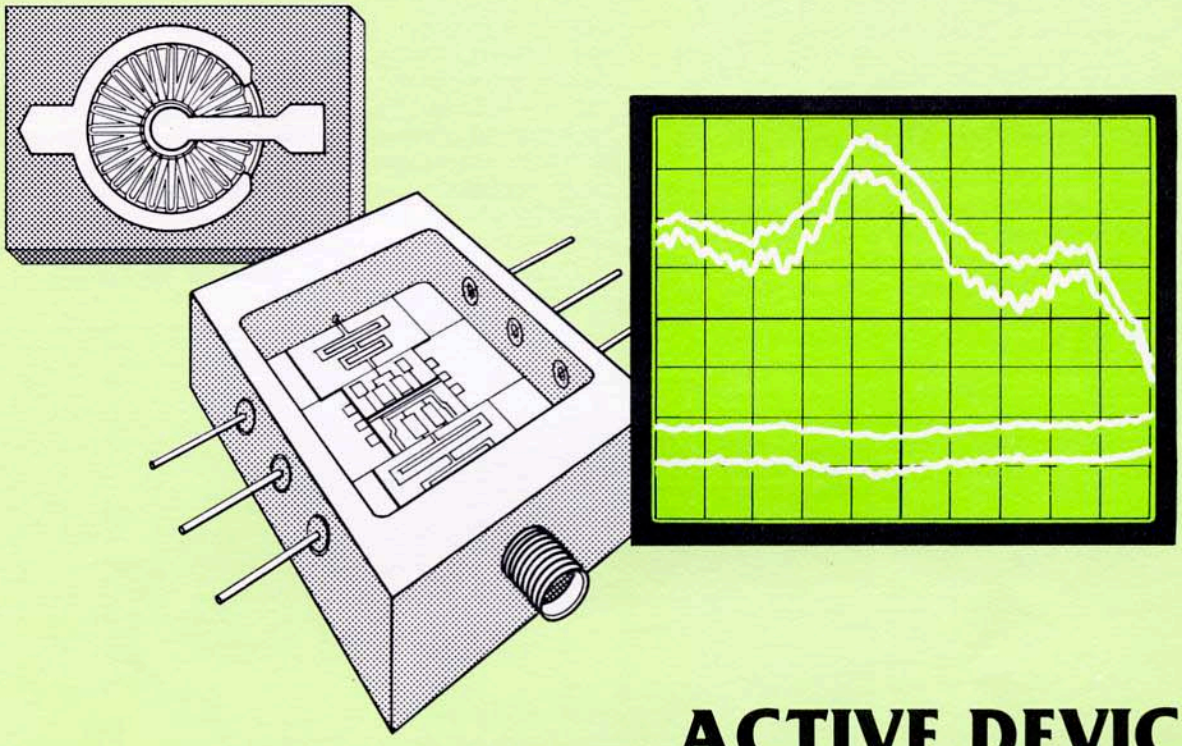

ACTIVE DEVICE MEASUREMENTS WITH THE HP 8755 FREQUENCY RESPONSE TEST SET

The Hewlett-Packard 8755 Frequency Response Test Set is an excellent solution to active device measurement problems. The advantages of real-time log display, multiple-channel power and power ratio measurement capability, and calibrated offset dB control are tremendous assets to active device measurement instrumentation. These advantages can be applied equally to production and design measurement systems to increase measurement speed and ensure optimum performance.

Four system configurations using the 8755 to simplify common active device measurements will be described:

1. Swept-Frequency Gain and Power Output
2. CW Frequency Gain Compression
3. Swept Frequency Gain Compression
4. Swept Frequency Harmonic Content

Included is a discussion of calculator based 8755 test systems for further measurement capability.

AUGUST 1978

HEWLETT hp PACKARD

INTRODUCTION

The 8755 has proven to be an effective instrument for making scalar measurements on passive devices. The absolute power and power ratio measurement capability facilitates the measurements of insertion loss, return loss, directivity, etc. Three application notes describe the use of the HP 8755 for making passive device measurements. In Application Note 183, measurements of insertion and return loss are described along with detailed discussion of measurement accuracy. These techniques apply to active device measurements and as such provide a good background for the measurements described in this note. Application Notes 187-3 and 187-5 describe methods of using calculator control for further measurement capability.

Active device measurements typically require additional measurement capability and effort to characterize their performance. Active device performance deteriorates with increasing power. Often unpredictable reactions can result from minute changes of input parameters. A wide range of absolute power levels are involved, especially in high gain amplifiers. Finally, active devices will require more measurements for complete characterization than passive devices. The 8755 can readily make these additional measurements.

The 8755 Analyzer is shown in Figure 1 with a description of the front panel controls. The 8755 is an amplitude-only (scalar) detection and display system designed for making power ratio and absolute power measurements from 10 MHz to 18 GHz. It has three detector channels each employing Schottky diode detectors with appropriate linearity compensation for a +10 dBm to -50 dBm dynamic range. The system uses an AC signal processing system requiring the RF be modulated at a 27.8 kHz rate. The absolute signal level or ratio of two detected signals can be displayed on the CRT or output on the rear panel as a calibrated (dB) analog voltage.



VERNIER Control. Provides continuously variable offset of the display when VERNIER ON/OFF switch is in the ON position.

REFERENCE LEVEL Control. This control has three thumb wheels. The thumb wheel farthest left sets the polarity of the offset (+ or −). The center and right thumb wheels adjust the offset of the 10 dB and 1 dB steps respectively.

dB/DIV Resolution Pushbutton Switches. These switches select channel vertical resolution of .25, 1, 5, or 10 dB per division.

VIDEO FILTER Pushbutton Switch. When this switch is depressed, the noise component is filtered from the 8755B display. Pressing this control a second time releases it.

DISPLAY Pushbutton Switches. These switches select a detector, ratio of two detectors, position line or no display for each channel.

DISPLAY REFERENCE POSITION Control. When POSITION pushbutton is depressed, the POSITION screwdriver adjustment may be adjusted for a trace positioned anywhere between the top and bottom extremes of the oscilloscope screen. When the resolution is increased, the CRT trace will be expanded about the reference graticule line at which the position trace is adjusted.

MODULATOR DRIVE Output Connector. This connector provides a 27.8 kHz square wave output signal, nominally ±6 volts, to drive the HP Model 11665B modulator.

FIGURE 1 HP 8755 Frequency Response Test Set

SWEPT FREQUENCY GAIN AND POWER OUTPUT

This is probably the most commonly made measurement on active devices. The 8755 can simultaneously display gain in dB and output power in dBm minimizing operator interpretation and calculations. The microwave set-up is simple and the calibration straightforward allowing the operator to focus his attention on the device under test.

The measurement set-up is shown in Figure 2. The gain measurement is first calibrated by removing the DUT, connecting the power splitter directly to the coupler main arm and adjusting the A channel OFFSET CAL potentiometer so the 0 dB gain display coincides with the A channel position line. The gain measurement is made by selecting the A/R Display switch with the dB/DIV and OFFSET dB controls set to provide a centered display with the desired resolution. The output power is measured by selecting the B DISPLAY switch with the dB/DIV switch set for the desired resolution and the OFFSET dB control set to (-) the dB loss between the output of the device and the B detector. If simultaneous display of gain and power output is not required, the power splitter and B detector can be eliminated. Power output can still be easily measured by displaying the A detector (A) instead of Gain (A/R).

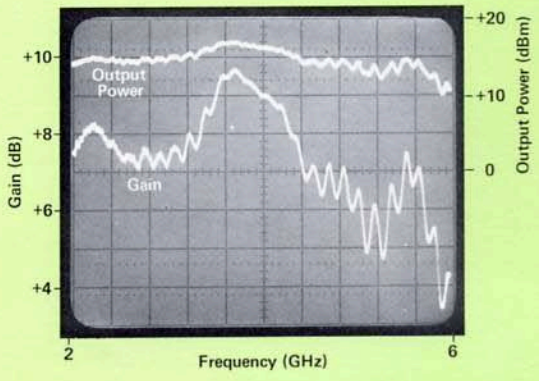

Photograph of the gain and power output display of a 2-6 GHz amplifier using the set-up below. The lower trace (Gain) is produced by displaying A/R in the A channel at 1 dB/div with +7 dB offset. The power output trace is produced by displaying the B detector in the B channel at 5 dB/div and -16 dB offset which represents the loss through the power splitter and 10 dB attenuator. The position line for both traces is the center graticule.

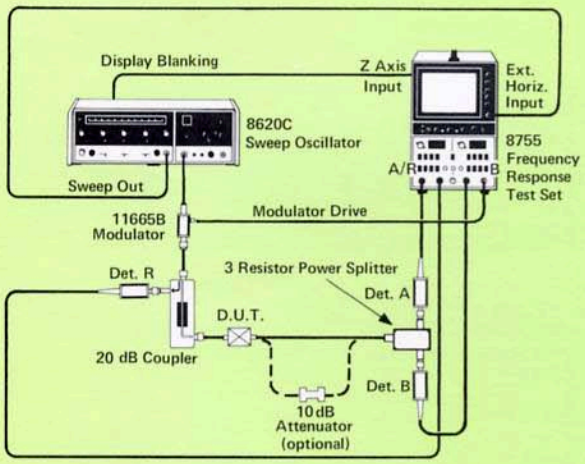

Set-up for measuring swept frequency gain and output power of an amplifier. The optional 10 dB attenuator is used to reduce mismatch errors and improve instrumentation accuracy.

FIGURE 2 Swept frequency gain and power output

Accuracy Considerations

The major source of inaccuracy is mismatch between components. Techniques used to minimize mismatch are described in Application Note 183. The following discussion is directed to optimizing instrumentation accuracy.

The instrument accuracy for ratio measurements can be optimized by insuring the absolute powers at each detector are relatively equal. This can be done by placing attenuation before the detector with the greater power. The use of attenuators before the detectors can additionally serve to reduce the measurement mismatch error.

For applications requiring additional instrumentation accuracy, a power meter can be used. Replace the 11664 detector with the power meter sensor and measure the average value of the modulated RF power. The modulation can be left on without significantly affecting the power meter measurement accuracy, but remember, of course, when using the 11665B external modulator, the 50% duty cycle modulation reduces the reading 3 dB ± .1 dB from the CW value.

Measurements on amplifiers with gain below 50 MHz should be configured so that the modulation signal does not saturate the amplifier. One method is to place an HP 11668A high pass filter at the device input. Another is to modulate the RF just before the detector allowing the device under test to see the unmodulated RF signal. When making absolute power measurements with this configuration the loss through the 11665B modulator must be included. The 8755 can drive two 11665B modulators allowing ratio measurements using this technique.

Leveling Considerations

Leveling the input power to the device under test can considerably improve the ability to interpret the display. With the input power leveled, the output power frequency response variations are almost entirely due to the gain variations with frequency. Most sweepers incorporate internal leveling or provide inputs for external leveling from a crystal detector and directional coupler. If these methods of leveling are not available, the system can be configured so that the 8755 provides leveling feedback to the sweeper via the "Power Meter Leveling" input connector. 8755 leveling does not allow the sweep speed and power range that conventional systems provide but does offer the advantage of dB calibrated power control.

The 8755 "EXT. A and EXT. B" outputs provide +.5 volts/div above the 0 dBm reference graticule and -.5 volts/div below the 0 dBm graticule. The total available voltage swing is ± 5.0 volts; therefore, the 8755 leveling signal is only compatible with the power meter leveling input over a narrow range. 8755 leveling does allow slightly faster sweep speeds than possible with power meter leveling.

The measurement configuration is shown in Figure 3. To set up 8755 leveling, display the input power (R DETECTOR) in channel B at 5 dB/div and set the OFFSET dB control to −20 dB to make the position line equal to 0 dBm. Set the sweep speed to approx. 1 second and adjust the sweeper power and leveling loop gain controls for satisfactory leveling. The leveled power can be changed by selecting different OFFSET dB on the B channel of the 8755. The trace will stay at the same graticule position if leveling is maintained.

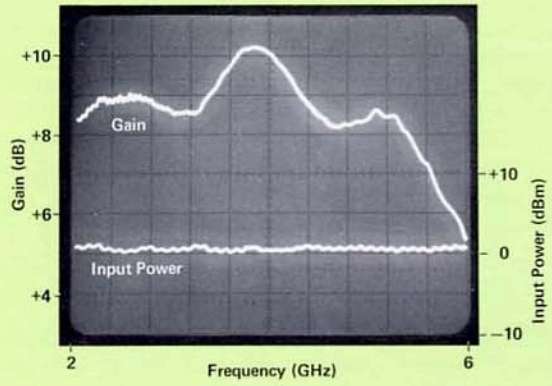

Photograph of an amplifier measurement using the set-up below. A 181T variable persistence mainframe was used to obtain a constant trace as the sweep speed was approximately 1/sec.

The input power (R detector) is displayed in the B channel with the 0 dBm position line adjusted to the second graticule from the bottom.

Once leveling is obtained, the input power can be adjusted in dB steps by switching the offset dB control. The input power trace will not change if leveling is maintained.

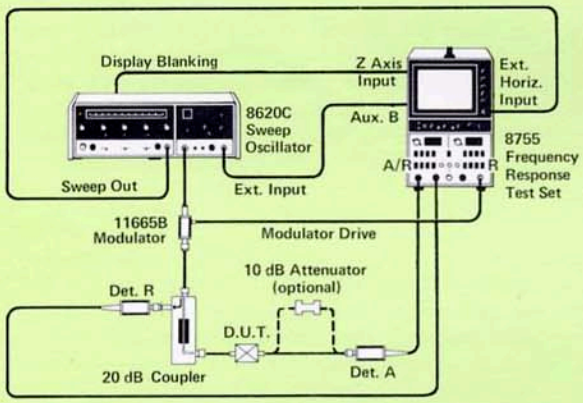

Set-up for measuring swept frequency gain utilizing leveling feedback from the 8755. The B channel displays the input power (R detector) and provides feedback to the power meter leveling input of the 8620C sweep oscillator. The A channel displays A/R, the device gain.

FIGURE 3 Swept frequency gain, 8755 leveled

CW FREQUENCY GAIN COMPRESSION

The measurement of gain as a function of input power level is very useful for characterizing the power handling capability of a device. Active devices universally exhibit compression and saturation effects. When the overall device performance must be optimized, the 8755 is especially useful in making trade-offs between low power gain and compression point. For this measurement shown in Figure 4, the equipment is similar to the swept frequency gain and power out measurement shown in Figure. 2. The set-ups differ only in the cabling involving the horizontal display. The previous comments on accuracy apply here as well. The operator can easily switch from one measurement to the other without affecting the accuracy or adding microwave components.

The measurement is made at a CW Frequency with the output power varied by driving the sweeper internal modulator with a ramp voltage. One method to accomplish this is to place the sweeper in ΔF mode with the ΔF sweep width set to 0 and use the sweep output to drive the EXT. AM input. Another is to use the sweeper internal 1 kHz square wave to modulate the RF. The third method is to use a function generator to drive the EXT. AM input. To achieve widest possible dynamic range and most linear power variation, the function generator drive voltage should be offset to match the sweeper AM input characteristics. This can best be done with a function generator with dc offset capability.

The B channel of the 8755 is used only to display Power out vs. Power out for horizontal calibration. The horizontal gain control should be adjusted so this trace is a 45° display. The A channel then displays Gain vs. power out with a horizontal display calibrated in power output dB. Figure 4 shows an amplifier measurement made at 4 GHz.

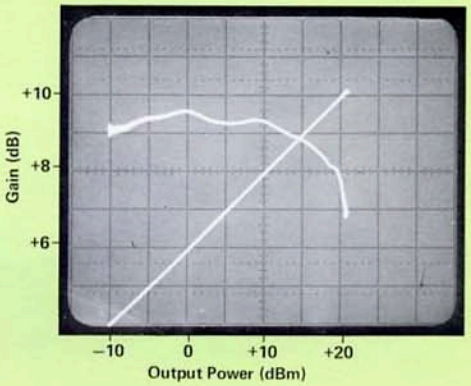

Photograph of a Gain vs. Power-out measurement on a 4 GHz amplifier using the set-up below.

The diagonal trace of the B det (Power-out vs. Power-out) only serves to set up the horizontal display calibration for the Gain Power-out display. The Gain trace can be moved horizontally by adjusting the B channel OFFSET dB. At low power output, i.e., power input, noise becomes an increasing proportion of the R-detector signal causing widening of the Gain trace.

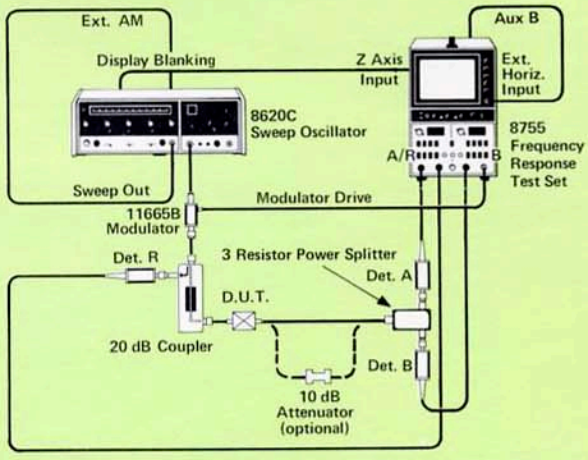

Set-up for gain compression measurement on an amplifier at a CW frequency.

FIGURE 4 CW frequency gain compression

SWEPT FREQUENCY GAIN COMPRESSION

The 8755 can be configured to measure an amplifier's 1 dB compression point along with gain, gain flatness and output power on a swept frequency basis. The 1 dB compression point of an amplifier is an indicator of the maximum output power possible before the gain linearity and associated distortion become excessive. To measure the 1 dB compression point in a swept frequency system, leveling must be applied to the output power rather than the input power. If this were not the case, an amplifier's maximum output power point and associated saturation would always coincide with the maximum gain point. The measurement consists of the comparison of the swept frequency gain display at a very low output power to one at an output power sufficient to reduce the gain a maximum of 1 dB.

Two methods can be used to make the measurement, one using the 181 storage display with the 8755 and the other a square wave generator driving the sweeper ext. AM input. The storage display system is the easiest to set up and use; however, the square wave generator system provides true real-time display.

The storage system is shown in Figure 5. The calibration procedure is the same as the swept frequency gain procedure. Output power leveling should be set up by observing the output power instead of gain in the A channel and adjusting the leveling loop gain control. Once a low power input and associated uncompressed gain display are obtained, increase the persistence to store the display. Then increase the input power so that the successive power level and gain traces are stored. When the series of gain displays is 1 dB wide, the amplifier gain is compressed 1 dB.

The square wave generator system set up differs only slightly from the storage scope system. The input power is increased by changing the amplitude of a square wave signal into the EXT. AM input of the sweeper. Two input power traces and associated gain traces will be displayed. When the two gain traces are 1 dB apart, the amplifier is compressed 1 dB.

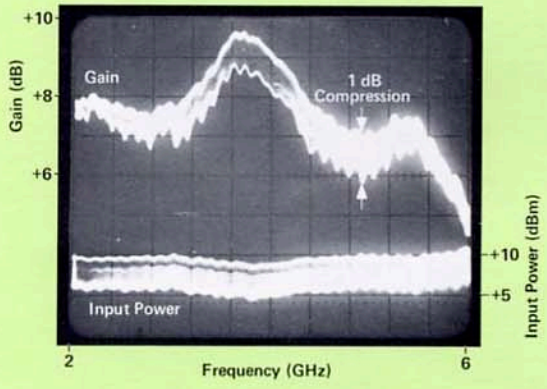

Photograph of swept frequency gain compression on a 2-6 GHz amplifier using the storage display technique. The Gain trace is 1 dB wide at 4.2 GHz. The output power can be measured by displaying the A detector in the A channel.

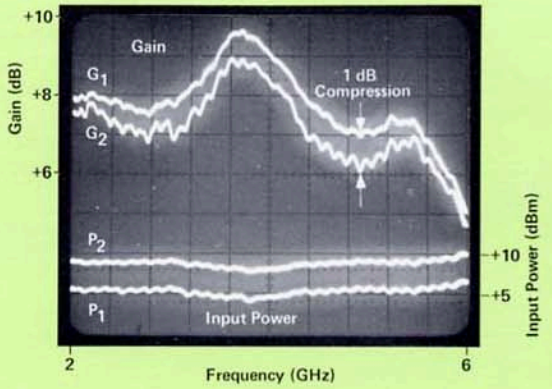

Photograph of swept frequency gain compression on the same 2-6.2 amplifier using square wave generator system. The frequency of the square wave was approximately ½ the sweep speed. The labels show the gain and power-input trace relationship. As before, the Gain trace is 1 dB wide at 4.2 GHz.

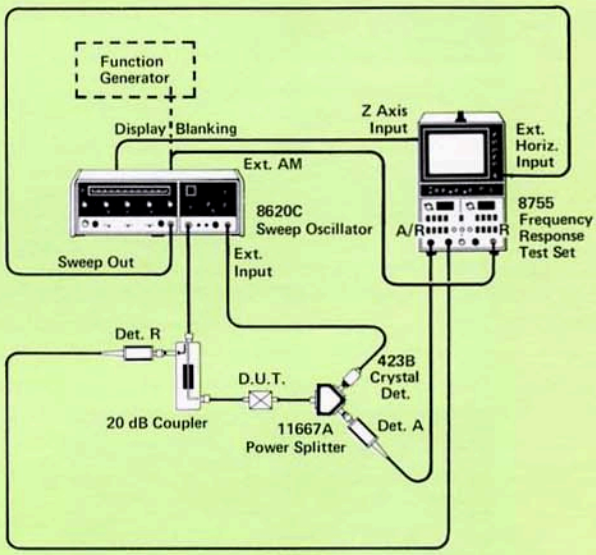

Set-up for swept-frequency gain compression measurement. The power splitter is required to provide leveled output power.

FIGURE 5 Swept frequency gain compression

HARMONIC MEASUREMENTS

Measurements of harmonic content are usually required to fully characterize amplifier or oscillator performance. Excessive harmonic energy can reduce the device signal-to-noise ratio, cause spurious responses and reduce the fundamental power level. In multi-octave devices, harmonics of the fundamental signal can fall within the normal operating range causing unpredicted reactions from later circuitry.

Harmonic content is normally specified as a ratio of the harmonic power to the fundamental power over the entire frequency range of the device. CW frequency measurements of harmonic power can be readily made with a spectrum analyzer. The HP 8755 can be configured to measure the ratio of harmonic power to the fundamental on a swept frequency basis over a ½ octave frequency range of the fundamental. Harmonic measurement on multi-octave amplifiers requires careful filter and sweep width selection to display only a single harmonic order. For example, on a 2-6 GHz amplifier the second harmonic frequency range of 4-12 GHz would also include portions of the third through the sixth harmonics. Three filters and sweep widths must be used to characterize the second harmonic a 2-6 GHz amplifier.

Sweep Freq. Range (GHz)	Filter Freq. Range (GHz)
2-3	4-6
3-4.5	6-9
4.5-6	9-12

The relative power of multiple harmonic orders can be indicated by sweeping the full device range using only one ½-octave filter. This set-up is shown in Figure 6. The system is calibrated by removing the device under test, setting the sweep frequency to cover the filter pass-

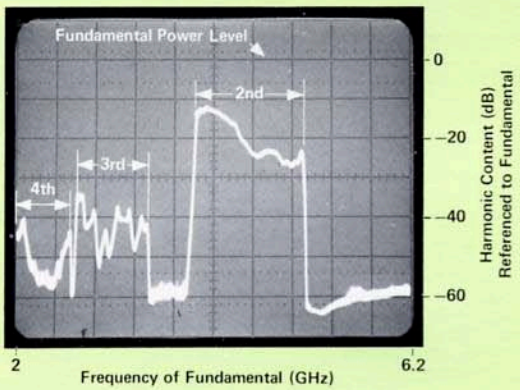

Photograph of swept frequency relative harmonic measurement on a 2-6 GHz amplifier using an 8-10 GHz filter in the adjacent set-up. The input power is swept from 2-6.2 GHz. The vertical display is the ratio of harmonic power through the 8-10 GHz filter to the amplifier output power. The display shows from left to right fourth harmonic of 2-2.5 GHz, third harmonic of 2.6 to 3.3 GHz and second harmonic of 4-5 GHz.

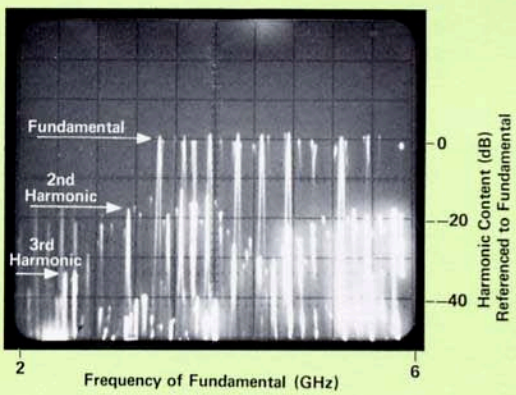

Photograph of swept frequency second harmonic measurement using a YIG filter. The amplifier input power is swept from 2-6 GHz and the filter is slowly tuned from 12 GHz down to 4 GHz. The second harmonic is shown by the locus of maxima extended beyond the arrow.

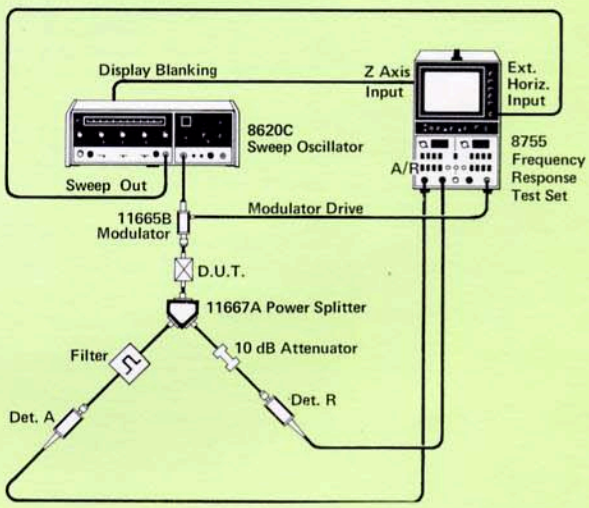

Set-up for swept frequency measurement of harmonic content on an amplifier or oscillator. The filter can be either a band-pass or tuneable YIG filter.

FIGURE 6 Swept frequency harmonic content

band and adjusting the 8755 OFFSET CAL control for 0 ratio of A/R. The 10 dB attenuator prevents signals reflected off the filter from affecting the R detector measurement. The measurement is made by inserting the device and resetting the sweep oscillator to the fundamental frequency range.

The bandpass filter can be replaced by a tuneable YIG filter to measure all the device harmonics as the device is swept over its full frequency range. A variable persistence 181 series mainframe must be used with the 8755 to store signals passed through the YIG filter. The system is calibrated in a similar fashion to the bandpass filter system. As the device is swept through its full frequency range, the YIG filter is manually tuned down from higher order harmonics through the fundamental. The display stores the amplitude ratio of signals passed through the filter to the fundamental. Figure 6 shows a photograph of the second harmonic measurement of a 2-6 GHz amplifier using this system.

ADDITIONAL CAPABILITY WITH CALCULATOR CONTROL

Measurement capability of the 8755 can be further improved by adding calculator control and computation power to enhance accuracy, provide storage and normalization, or change the data into a more useful form. The basic elements of such a system are shown in Figure 7. The VHF switch and digital multimeter are controlled by the calculator to convert information from both channels of the 8755 into digital information stored in the calculator. The HP 8620C Sweep Oscillator is controlled by the calculator to provide up to 10,000 different CW frequencies per band. Measurements are taken in a step-by-step fashion with the data stored in the calculator for computation or display.

The ease in assembling a calculator controlled microwave test systems has been substantially increased with the availability of the 8620C option 011 with HP Interface Bus capability. For specific details in configuring a calculator controlled microwave test system with the 8755 and 8620C, refer to Application Notes 187-3 and 187-5.

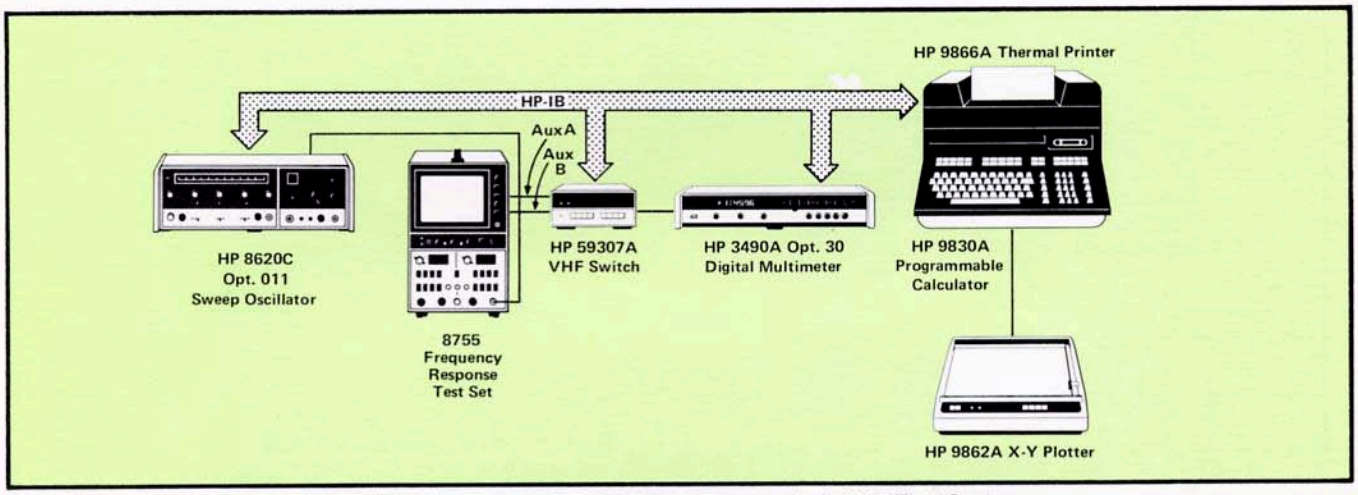

FIGURE 7 Basic elements of calculator controlled 8755 Test System

SWEPT FREQUENCY GAIN COMPRESSION USING DIGITAL NORMALIZATION

Another method of viewing gain compression on a swept frequency basis incorporates digital normalization. The setup is shown in Figure 8. Note that a 3 resister power splitter is required at detectors A and B. First; the small signal gain response is stored in digital memory. This characteristic is then subtracted the current input trace which results in a straight line display. As the output power is turned up, the current input trace becomes the compressed gain, the stored trace is still the small signal gain, and the difference is gain compression.

Once the gain is compressed by 1 dB at any frequency on the display, the output power indicated by the B detector is the output of the amplifier for 1 dB gain compression. Figure 9 shows these conditions. The initial storage process should be repeated if adjustments are made on the amplifier that would alter the small signal gain response.

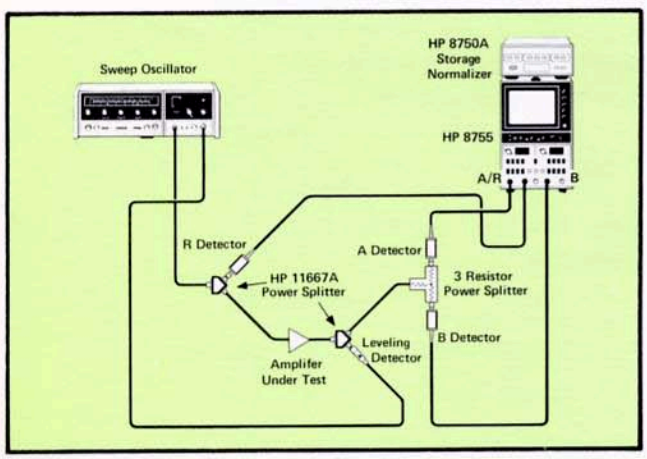

FIGURE 8 Setup for measuring swept frequency gain compression using digital normalization.

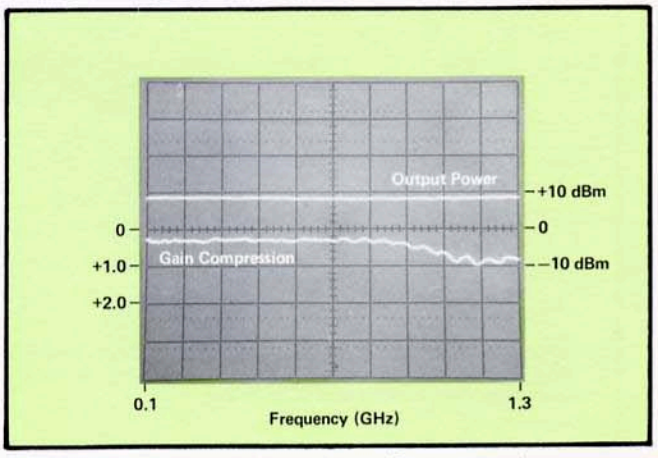

FIGURE 9 CRT traces show that 1 dB compression occurs at 1.15 GHz with + 8 dBm output power.

Suggested HP Instruments for these Applications

8755 Frequency Reponse Test Sets

Model 8755S
System Configuration

Consists of:
- 8755B Swept Amplitude Analyzer
- 182T Display
- 11664A Detectors (3 each)
- 8750A Storage Normalizer



Model 8755S
Option 001
System Configuration

Consists of:
- 8755B Swept Amplitude Analyzer
- 180TR Display
- 11664A Detectors (3 each)
- 8750A Storage Normalizer

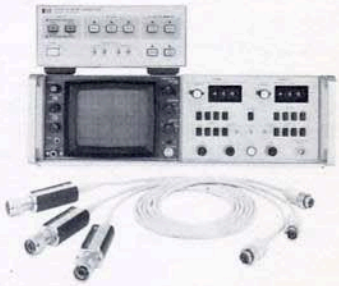

8755 Accessories

11666A
Reflectometer Bridge

(Contains built-in detector elements for both incident and reflected signals)



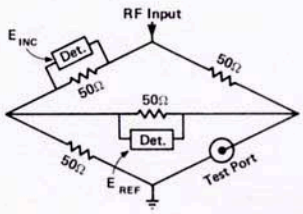

Provides reflection measurements from .04-18 GHz. With addition of one 11664 detector, can provide simultaneous insertion and return loss in measurements over the same frequency range.

11667A
Power Splitter



Provides ratio measurement and leveling capability with excellent frequency response tracking from DC to 18 GHz.

8620C Series Solid State Sweep Oscillators



Broadband RF Plug-ins for 8620C

86290A	2 - 18 GHz continuous sweep
86290B	2 - 18.6 GHz continuous sweep
86222A	.01 - 2.4 GHz continuous sweep
86222B (includes 1, 10 and 50 MHz crystal marker combs)	.01 - 2.4 GHz continuous sweep

86200 Series Single Band RF Plug-ins

Model	Frequency (GHz)
86220A	0.01 - 1.3
86230B	1.8 - 4.2
86235A (40 mw)	1.7 - 4.3
86241A	3.2 - 6.5
86242D	5.9 - 9.0
86245A (50 mw)	5.9 - 12.4
86250D	8.0 - 12.4
86260A	12.4 - 18.0

Straddle Band RF Plug-ins

Model	Frequency (GHz)
86240A (40 mw)	2.0 - 8.4
86240B (20 mw)	2.0 - 8.4
86240C (40 mw)	3.6 - 8.6

For more information, call your local HP sales office or East (301) 948-6370 • Midwest (312) 255-9800 • South (404) 955-1500 • West (213) 877-1282. Or write, Hewlett-Packard, 1501 Page Mill Rd., Palo Alto, California 94304.
In Europe, Hewlett-Packard S.A., 7, rue du Bois-du-lan, P.O. Box, CH-1217 Meyrin 2-Geneva, Switzerland. **In Japan**, Yokogawa-Hewlett-Packard Ltd., 29-21, Takaido-Higashi 3-chome, Suginami-ku, Tokyo 168.

5952-9230

PRINTED IN U.S.A.