HEWLETT® PACKARD

Configuring the HP 4396B for O/E Testing

Application Note 1288-2



Introduction

The recent trend in cable television (CATV) is the need for more selections, or channels, and the possibility of having interactive TV services such as On-Line-Banking and Movies-on-Demand. These requirements are pushing the limits of the copper cabling already laid out for today's CATV systems and these systems are not able to provide the "500 channels" of TV for the future. The industry is now changing from copper cable to fiber optic cable to carry the signals to the consumer.

The fiber optic cable carries the channel information as light signals, but all major TV equipment works upon electrical signals. Hence, tomorrow's CATV systems needs both electrical-to-optical converters (E/O) and optical-to-electrical (O/E) converters. An O/E converter changes light signals to electrical signals, and an E/O converter does the reverse.

These converters need to be tested for conversion flatness and efficiency. A converter with too much ripple can cause distortions in the TV channels audio or video signals, which will show on the TV screen. A converter with low efficiency, or gain, can lead to low signal-to-noise ratio, which would cause "snow" on the TV. A converter without flat group delay will affect the quality of the audio and color of the channel.

There is a myriad of tests performed on these converters; this paper will concentrate solely on the test system setup for O/E converter test, using the HP 4396B 1.8 GHz Combination Analyzer.

The HP 4396B

The HP 4396B combines a network analyzer (NA), spectrum analyzer (SA), and impedance analyzer (ZA) into a single instrument. This combination allows for some major advantages:

1. **Reduced capital equipment cost** — The HP 4396B costs less than a comparable network analyzer and spectrum analyzer if they were purchased separately.
2. **Simplicity** — The HP 4396B is simpler to use. The front panel interface is always the same for every mode of the combination analyzer. Knowing how to operate the HP 4396B means you can operate 3 analyzers without constantly connecting and reconnecting the cables.
3. **Accuracy** — The HP 4396B uses the latest digital signal processing (DSP) techniques to enhance its performance. The HP 4396B has digital bandwidth filters and a stepped FFT technique for speed and accuracy.
4. **Power** — The HP 4396B has several powerful functions to enhance your testing capabilities, such as List Sweep, a built-in floppy disk drive (FDD), and a controller capability with HP IBASIC to automate testing or test systems.

HP IBASIC allows for convenient control of the HP 4396B and automates testing. In this note, HP IBASIC is used to determine the offset factors for the E/O converter. In order to test an O/E converter, an optical system or an E/O converter must be characterized. These characteristics are placed into the HP 4396B memory array and subtracted from the actual E/O-O/E measurement to obtain the O/E parameters.

The HP 83400 series of Lightwave Sources are excellent E/O converters, with modulation bandwidths from 300 kHz to 3 GHz. They come provided with a disk of calibrated conversion parameters specific to each individual unit.

With an IBASIC program, the HP 4396B can read the E/O instrument disk and interpolate the conversion parameters for any bandwidth of interest. The HP IBASIC program will then put into the HP 4396B memory array the E/O conversion parameters. This HP IBASIC program is available from your local HP field sales representative upon request. (See Appendix for program listing.)

Conversely, the HP 83410 series of Optical Receivers can be used to characterize an E/O system. Instead of using a calibrated E/O for the test system, a calibrated O/E can be used to find the characteristics of the E/O

system. This data can be factored into the measurements to obtain the corrected O/E device characteristics.

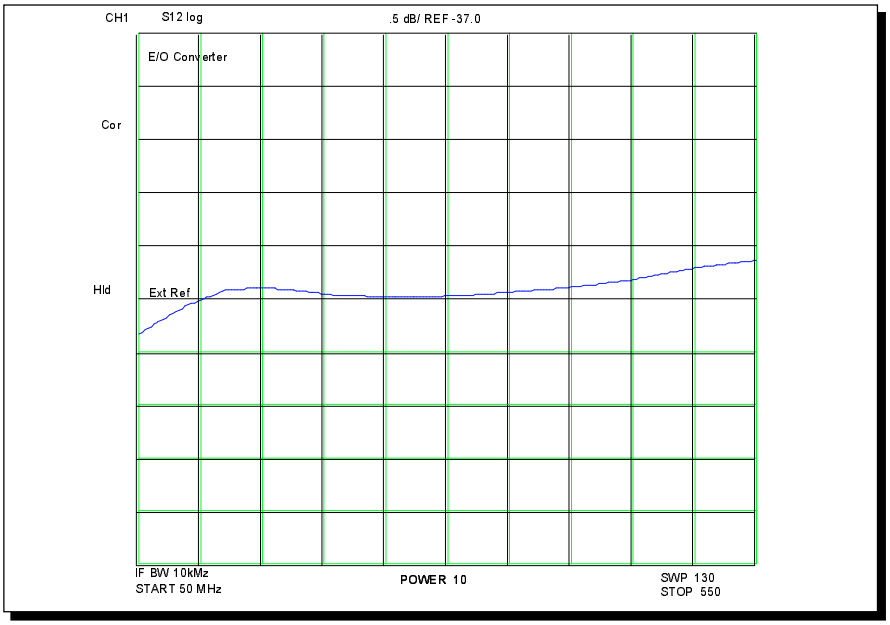

Figure 1. Conversion Flatness for the HP 83400B

The HP 4396B for testing O/E Conversion Flatness

One of the first tests of an O/E converter is magnitude and group delay flatness, also called conversion flatness. Conversion flatness indicates whether the device converts signals from light to electricity in a manner that is relatively flat over a given bandwidth. For TV signals, a channel bandwidth is 6 MHz.

The system layout is given in Figure 2. The output from the network analyzer source is split; half the signal is returned to the analyzer's reference port, while the other half goes to the E/O converter. The optical output from the E/O is connected via fiber optic cable to the O/E converter (DUT). The electrical output of the O/E is the sent on to the Analyzer's transmission port. An S-parameter test set can also be used to make full 2-port S parameter measurements, although E/O converter will remain the same in every measurement.

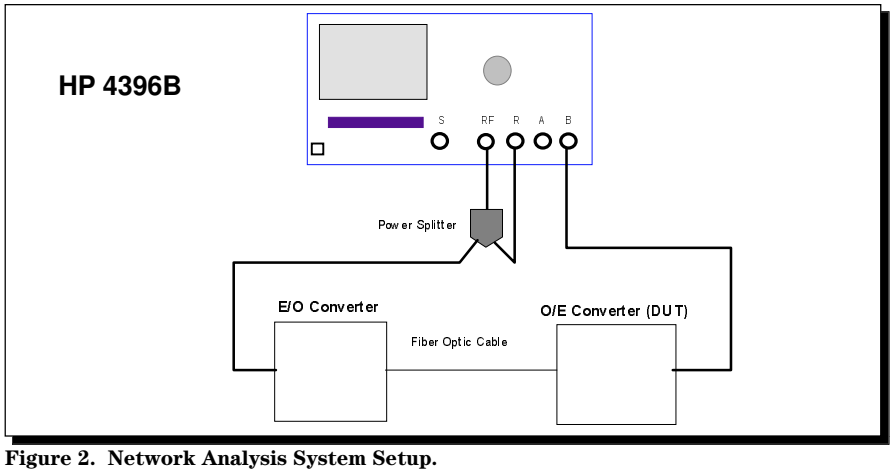

Figure 2. Network Analysis System Setup.

After completing a THRU calibration by bypassing the E/O and O/E converters, the system is ready to make measurements. The calibrated data measured by the analyzer is the total conversion of both the E/O and the O/E converters. To get just the O/E converter conversion data, the analyzer will then subtract the conversion parameters of the E/O converter. The resultant trace, DATA - MEMORY, is the conversion flatness of the DUT. A sample Conversion Flatness result is given in Figure 3.

The HP 4396B has a full vector network analyzer, which means it processes phase information in its measurements. The phase information combined with the frequency information results in group delay information.

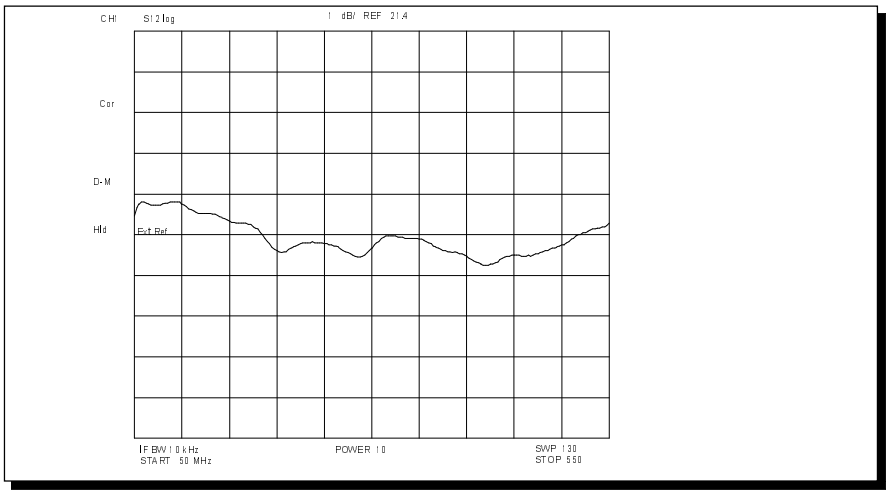

Figure 3. Corrected O/E Converter Amplitude Flatness.

The HP 4396B Spectrum Analyzer

The HP 4396B has a powerful spectrum analyzer inside. It has a dedicated Spectrum Input Port, and can also monitor the spectrum from the R, A, or B ports. A spectrum analyzer allows spectral testing of a component for Carrier-to-Noise (C/N), Harmonics, Hum, and Composite Triple Beat (CTB). A system schematic for CTB testing is shown in Figure 4. Separate signal generators are necessary to drive the E/O converter.

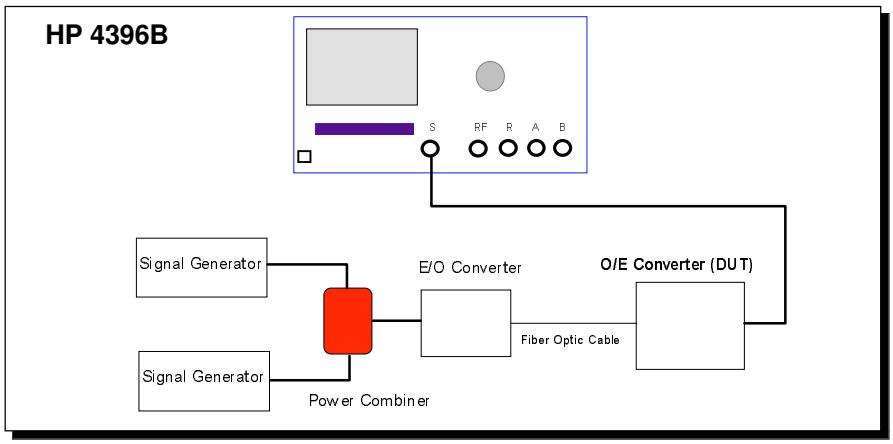

Figure 4. Spectrum Analysis IMD Test Setup

In Figure 4, only one E/O converter is used with the two signal generators combined at the input to the E/O. Depending on the specifications of the E/O, two E/O converters can be used: one attached to the output of each signal generator, with an optical combiner to combine them before the input to the O/E under test. A screen from a CTB test is shown in figure 5.

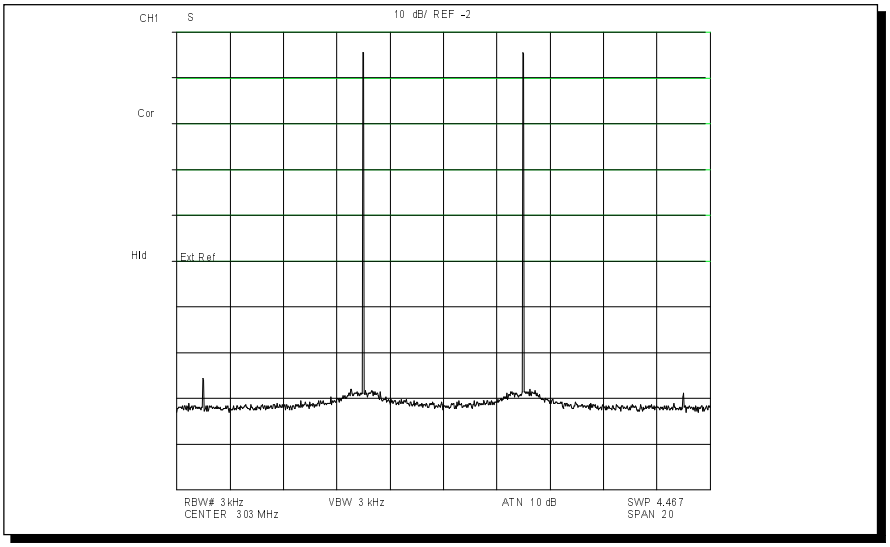

Figure 5. Spectrum Analyzer CTB Test Results

C/N measures the amount of signal present compared to the amount of noise on the signal. Too little C/N means "snow" on the TV screen. CTB measures the amount of distortion from in-channel signals that "leaks" to other channels. This is called crossmodulation or crossmod, and typically is represented by jittery diagonal lines on the TV. Hum measures the AM modulation of the signal carrier due to the electrical power system. The TV picture will show overlaid horizontal if too much hum is present.

Conclusion

The HP 4396B fits in perfectly for testing CATV components, electrically and optically. The use of the calibrated Optical Transmitters and Receivers allows for manufacturing test of O/E converters. The HP 4396B has a third analyzer in it, an impedance analyzer for measuring passive components. This triple functionality of the HP 4396B also makes it a very useful tool for R&D engineers making CATV components.

Appendix

Program Listing

```
10000  ! Program to be run by HP4396B internal
         IBASIC
10010  ! This program uses the correction factors for
10020  ! an HP83411C lightwave receiver as found
         on
10030  ! the floppy disc shiped with the HP83411C
         for
10040  ! use with an HP8702.
10050  ! The name of the file to be used must be
10060  ! entered below.
10070  ! At startup and whenever the start frequency,
10080  ! the stop frequency or the number of points is
10090  ! changed this program will re-calculate the
10100  ! correction data for the HP83411C and store
10110  ! this data in the so called memory array of
10120  ! the HP4396B after which DATA+MEMORY
         is
10130  ! selected for display. This way all displayed
10140  ! data is corrected for the HP83411C.
10150  REM
10151  COM /Ampl_phase/
         Ampl(1:101,1:2),Phase(1:101,1:2),Delay
10160  INTEGER One_point,Err,Error
10170  REAL Points,Pnts
10180  REAL Strt,Stp,Sta,Sto
10190  REAL Dat(1:801,1:2)
10200  DIM Err$[256],Error$[256],Filename$[256]
10210  !
10220
         !==============================
         ========
10230  Filename$=""   !  Enter filename here
10240
         !==============================
         ========
10250  !
10251  Delay=0
10252  !
10260  RAD
10270  !
10280  ASSIGN @Hp4396 TO 800
10290  ASSIGN @Bin TO 8;FORMAT OFF
10300  !
10310  ON KEY 1 LABEL "RETRY CAL" GOSUB
         Calkey
10320  !
10330  LOOP
10340    OUTPUT @Hp4396;";POIN?"      ! # of
           datapoints
10350    ENTER @Hp4396;Points
10360    OUTPUT @Hp4396;"STAR?"       ! Start
           frequency
10370    ENTER @Hp4396;Sta
10380    OUTPUT @Hp4396;"STOP?"       ! Stop
           frequency
10390    ENTER @Hp4396;Sto
10400    !
10410    IF Points<>Pnts OR Sta<>Strt OR Sto<>Stp
           THEN
10420      GOSUB Correction
10430    END IF
10440  END LOOP
10450 STOP
10460 !
10470 Correction:!
10480  BEEP
10490  !
10500  ! Save new Points, Sta and Sto values
10510  !
10520  Pnts=Points
10530  Strt=Sta
10540  Stp=Sto
10550  !
10560  OUTPUT @Hp4396;";MEAS S21"     ! Meas
         S21
10570  OUTPUT @Hp4396;";HOLD"         ! Stop
         sweep
10580  OUTPUT @Hp4396;";DISA ALLB"    ! Claim
         display
10590  !
10600  PRINT
10610  PRINT
10620  !
10630  GOSUB Err
10640  !
10650  IF Error=0 THEN
10660    !
10670    ! Get correction values from disc.
10680    !
10690    Read_floppy(Filename$,Error,Error$)
10700  END IF
10710  !
10720  IF Error=0 THEN
10730    PRINT
10740    PRINT
10750    PRINT
10760    PRINT "RE-CALCULATING HP83411C
           CORRECTION CURVE"
10770    PRINT
10780    PRINT USING "K,10D";"Start frequency
           :";Sta
10790    PRINT USING "K,10D";"Stop  frequency
           :";Sto
10800    PRINT "Number of points :";Points
10810    !
10820    ! Calculate new correction by interpolation
10830    !
10840    Mkd(Strt,Stp,Pnts,Dat(*))
10850    !
10860    ! Send data header information
10870    !
10880    OUTPUT @Hp4396 USING
           "#,K";";FORM3;INPUDATA "
10890    OUTPUT @Hp4396 USING
           "#,K,6Z";"#6",Points*16
10900    !
10910    ! Send data and manipulate.
10920    !
10930    GOSUB Send                 ! To DATA arrays
```

```
10940     OUTPUT @Hp4396;";DATMEM"    ! To
            MEMORY arrays
10950     OUTPUT @Hp4396;";SAVC"      !
            Re-calculate CAL
10960     OUTPUT @Hp4396;";MATH DPLM" ! Disp
            DataPLusMem
10970   END IF
10980   !
10990   IF Error THEN
11000     Error=0
11010     OUTPUT @Hp4396;";DISA HIHB"! Claim
            50% display
11020     !
11030     PRINT Error$
11040     PRINT
11050     PRINT "Correction failed. Check :"
11060     PRINT
11070     PRINT "- START frequency"
11080     PRINT "- STOP  frequency"
11090     PRINT "- NUMBER of POINTS"
11100     PRINT
11110     PRINT "and change to correct values."
11120     PRINT "OR press RETRY CAL to retry with
            current values."
11130     !
11140     OUTPUT @Hp4396;";KEY 47"  ! System
            menu
11150     OUTPUT @Hp4396;";KEY 0"   ! IBASIC
11160     OUTPUT @Hp4396;";KEY 6"   ! ON KEY
            LABELS
11170   ELSE
11180     OUTPUT @Hp4396;";DISA ALLI" ! Release
            display
11190   END IF
11200   !
11210   OUTPUT @Hp4396;";CONT"
11220 RETURN
11230 !
11240 Send: !
11250   FOR One_point=1 TO Points-1
11260     OUTPUT
            @Bin;Dat(One_point,1),Dat(One_point,2)
11270   NEXT One_point
11280   OUTPUT
            @Bin;Dat(One_point,1),Dat(One_point,2)
            END
11290   GOSUB Err
11300 RETURN
11310 !
11320 Calkey: !
```

HEWLETT® PACKARD

For more information about Hewlett-Packard Test and Measurement products, applications, services, and for a current sales office listing, visit our web site, http://www.hp.com/go/tmdir. You can also contact one of the following centers and ask for a test and measurement sales representative.

United States:
Hewlett-Packard Company
Test and Measurement Call Center
P.O. Box 4026
Englewood, CO 80155-4026
1 800 452 4844

Canada:
Hewlett-Packard Canada Ltd.
5150 Spectrum Way
Mississauga, Ontario
L4W 5G1
(905) 206 4725

Europe:
Hewlett-Packard
European Marketing Centre
P.O. Box 999
1180 AZ Amstelveen
The Netherlands
(31 20) 547 9900

Japan:
Hewlett-Packard Japan Ltd.
Measurement Assistance Center
9-1, Takakura-Cho, Hachioji-Shi,
Tokyo 192, Japan
Tel: (81-426) 56-7832
Fax: (81-426) 56-7840

Latin America:
Hewlett-Packard
Latin American Region Headquarters
5200 Blue Lagoon Drive
9th Floor
Miami, Florida 33126
U.S.A.
(305) 267 4245/4220

Australia/New Zealand:
Hewlett-Packard Australia Ltd.
31-41 Joseph Street
Blackburn, Victoria 3130
Australia
1 800 629 485

Asia Pacific:
Hewlett-Packard Asia Pacific Ltd
17-21/F Shell Tower, Times Square,
1 Matheson Street, Causeway Bay,
Hong Kong
Tel: (852) 2599 7777
Fax: (852) 2506 9285

© Copyright 1994
Hewlett-Packard Company
Data subject to change
Printed in U.S.A. 4/97
5965-7657E