HEWLETT® PACKARD

Improving Network Analyzer Measurements of Frequency-Translating Devices

Application Note 1287-7

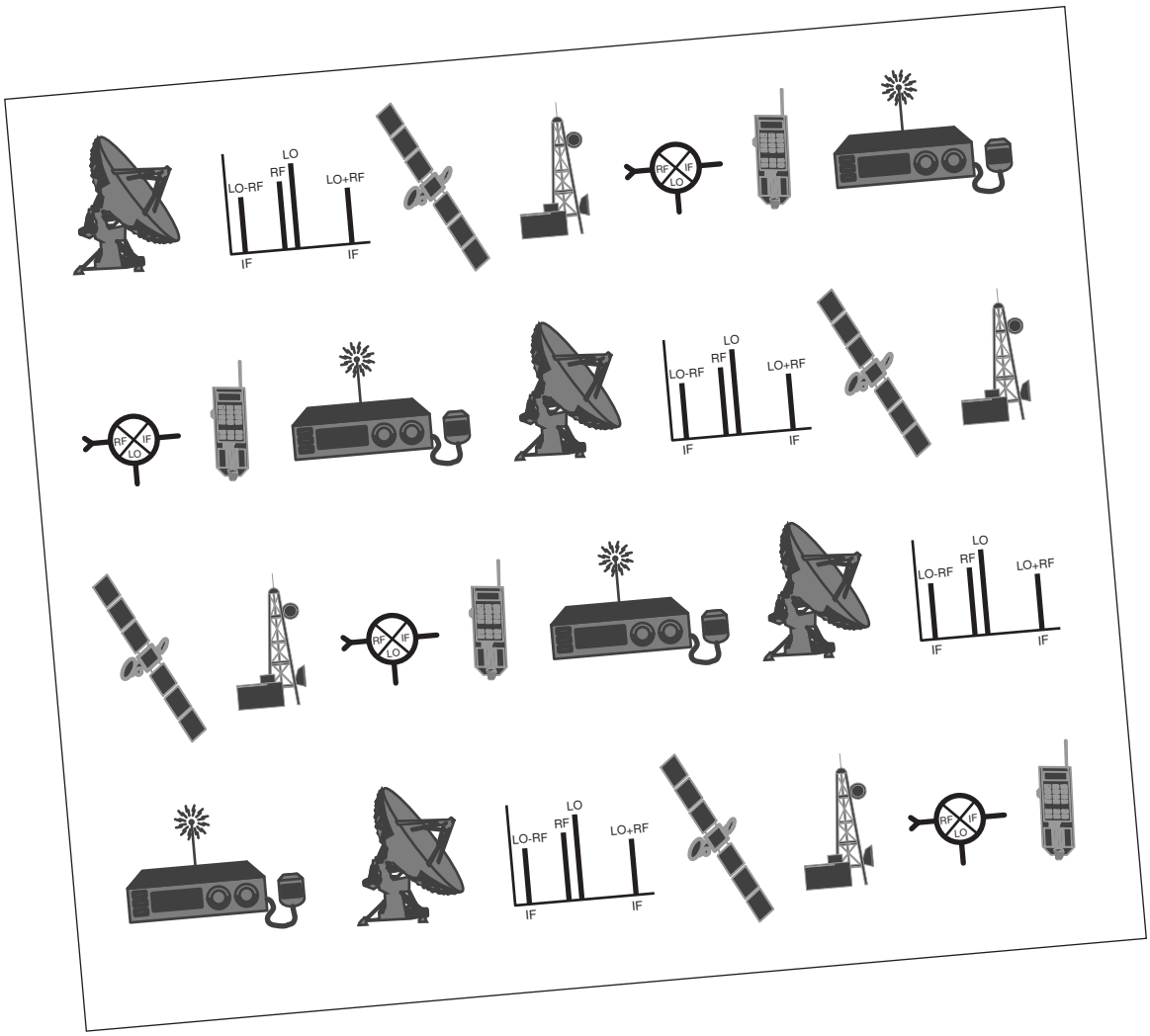

Table of Contents

Page

Introduction **3**

Network Analyzer Mixer Measurement Configurations **3**
- Scalar Network Analyzer Configuration 3
- Vector Network Analyzer in Frequency Offset Mode Configuration 5
- The Upconversion/Downconversion Technique 6

Conversion Loss **7**
- Definition and Importance of Conversion Loss 7
- Measurement Considerations 9
  - Mismatch Errors 9
  - Considerations Unique to the Scalar Network Analyzer 11
    - Importance of Proper Filtering 11
    - Frequency Response Error 12
  - Considerations Unique to the Vector Network Analyzer 13
    - Importance of Proper Filtering 13
    - Sampling Architecture and Issues 13
    - R-Channel Phase-Locking Considerations 16
    - LO Accuracy and Stability 16
    - Power-Meter Calibration 18
- Accuracy Comparison of the HP 8757D and a Vector Network Analyzer 22
- Fixed IF Measurements 25

Relative Phase Measurements **27**
- Relative Phase and Magnitude Tracking 27
- Group Delay 29
  - Important Parameters when Specifying Group Delay 29
  - Absolute Group Delay 31
  - AM Delay 31

Reflection Measurements **33**

Isolation Measurements **35**
- Feedthrough Measurement of Converters and Tuners 36

Absolute Group Delay — A More Accurate, Lower Ripple Technique **38**
- Characterizing Mixer Calibration Standards 39
  - Labeling Conventions 40
  - Measurement Assumptions 41
  - Test Procedures for Characterizing the Calibration Mixers 42
  - Mathematics to Extract Individual Mixer Data 45
- Calibrating the Test System with the Calibration Mixer 46
  - Calibration Configuration 46
  - Calibration Error Terms and Equations 48
  - Test Procedure for Calibrating the Test System 49
    - First-Order Error Correction: Frequency Response 50
    - Second-Order Error Correction: Frequency Response and Input Match 51
    - Third-Order Error Correction: Frequency Response, Input and Output Match 53

Appendix A: Calibration Mixer Attributes **55**
Appendix B: Tips for Making and Measuring the Calibration Mixer **56**
Appendix C: Program for Fixed IF Measurements with One External LO Source **57**
Appendix D: Application and Product Notes **60**

Introduction

Frequency-translation devices (FTDs) such as mixers, converters, and tuners are critical components in most RF and microwave communication systems. As communication systems adopt more advanced types of modulation, FTD designs are increasingly complex, tests are more stringent with tighter specifications, and the need to reduce costs is more important than ever.

The measurement trade-offs for frequency-translating devices vary widely among different industries. Measurement accuracy, speed, cost and ease of setup are among the considerations for determining the best test equipment. This application note explores current test equipment solutions and techniques that can be used to accurately characterize and test frequency-translating devices. Frequency-translating devices present unique measurement challenges since their input and output frequencies differ. These require different measurement techniques than those used for a linear device such as a filter. This note covers linear frequency-translation measurements, such as magnitude, relative phase, reflection and isolation. Corresponding accuracy issues are also discussed.

To get the most from this note, you should have a basic understanding of frequency translation terminology, such as “RF port,” “IF port” and “LO port.” Understanding of fundamental RF and network analyzer terms such as S-parameters, VSWR, group delay, match, port, full two-port calibration, and test set is also expected. For a better understanding of such terms, a list of reference material appear in the *Appendix* section.

Network Analyzer Mixer Measurement Configurations

Network analyzers used for testing frequency-translation devices include scalar network analyzers, vector network analyzers with frequency offset capability, and vector network analyzers using an upconversion/downconversion configuration. Each solution has its own advantages and disadvantages. This section provides a synopsis of the three configurations so you can quickly evaluate which is the best fit for your measurement needs. Detailed information about each solution is discussed in later sections.

Scalar Network Analyzer Configuration

The most economical instrument for FTD tests is a scalar network analyzer. A scalar network analyzer uses diode detectors that can detect a very wide band of frequencies. This capability enables a scalar network analyzer to detect signals when the receiver frequency is different from the source frequency. Magnitude-only measurements such as conversion loss, absolute output power, return loss and isolation can be made, as well as nonlinear magnitude measurements such as gain compression. Group delay information is available in some scalar network analyzers using an AM-delay technique, which employs amplitude modulation. AM-delay measurements are less accurate than group delay

Figure 1.
HP 8711C Scalar Network Analyzer Configuration

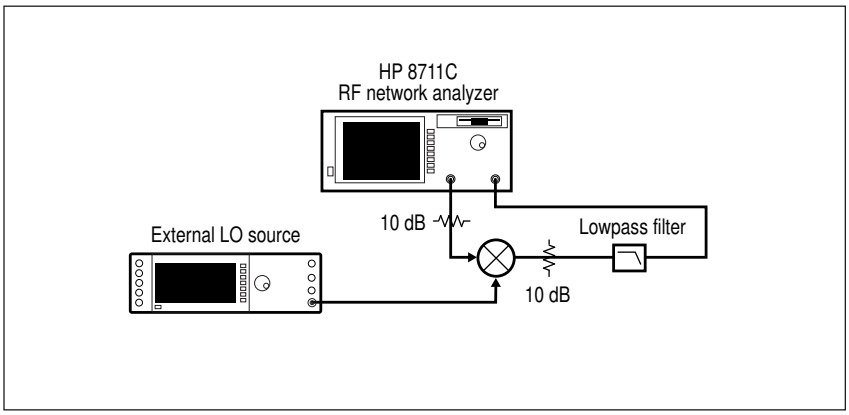

measurements obtained with a vector network analyzer. AM delay typically has an uncertainty of around 10 to 20 ns, whereas group delay with a vector network analyzer has an uncertainty as good as 150 ps. Advantages of the scalar solution include low cost and good magnitude accuracy. As shown in Figure 1, fully integrated scalar network analyzers such as the HP 8711C or HP 8713C provide economical RF measurements up to 3 GHz, and include AM delay capability. The HP 8757D scalar network analyzer, shown in Figure 2, measures up to 110 GHz, and provides very good absolute power measurements, particularly when installed with an internal power calibrator and used with precision detectors. In certain cases, such as measuring FTDs with an internal filter, the HP 8757D with internal power calibrator and precision detector can typically make more accurate magnitude measurements than a vector network analyzer.

Figure 2.
HP 8757D Scalar Network Analyzer Configuration

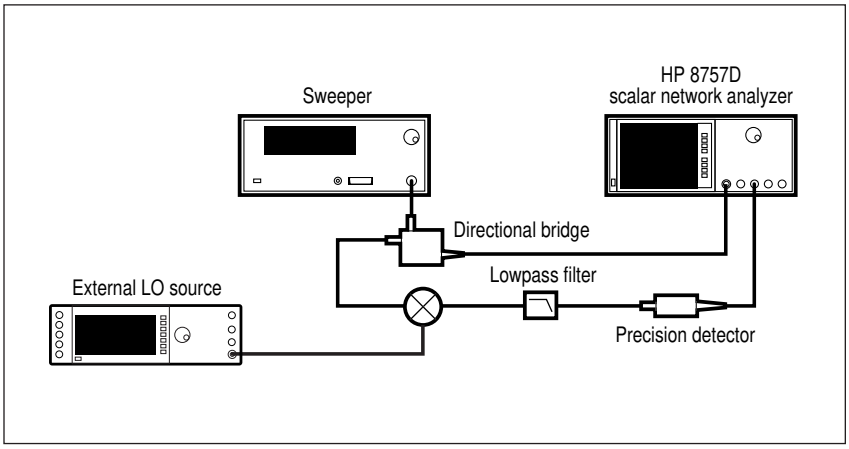

Vector Network Analyzer in Frequency Offset Mode Configuration

A more versatile solution for FTD test is a vector network analyzer. A vector network analyzer uses a tuned-receiver narrowband detector, which allows measurements of both magnitude and relative phase. The vector network analyzer's frequency offset mode offsets the analyzer's receiver from it's source by a given LO frequency, and makes frequency-translation measurements possible.

There are two common vector network analyzer configurations for FTD measurements. The simplest configuration is shown in Figure 3, and is practical for testing upconverters and downconverters. This configuration allows magnitude-only measurements with a limited dynamic range. For example, if you are interested in the magnitude response of the FTD's passband, the HP 8753E vector network analyzer has 35 dB of dynamic range in the R channel and provides a quick and easy solution.

Figure 3. Vector Network Analyzer in Frequency Offset Mode

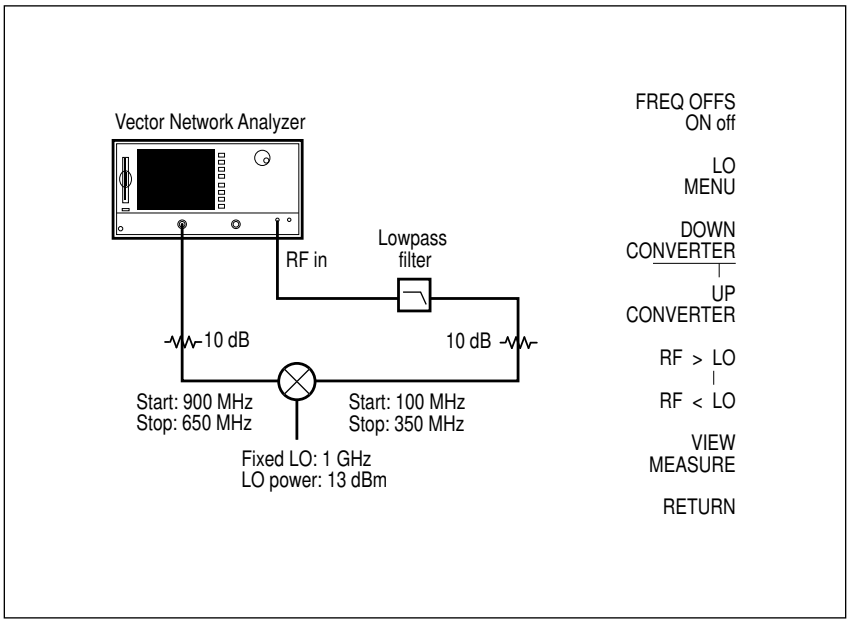

To also measure the FTD's relative phase and out-of-band response, Figure 4 illustrates a high-dynamic range configuration. An alternative high-dynamic range configuration can be achieved by splitting the analyzer's RF output power between the device under test (DUT) and the reference mixer (This configuration is similar to the one shown in Figure 24). In both configurations the vector network analyzer has around 100 dB of dynamic range. A signal into the reference R channel is always necessary for proper phase-locking of the vector network analyzer. In addition, the R channel provides a reference for ratioed measurements such as relative phase or magnitude and phase tracking. Vector network analyzers such as the HP 8720D series and the HP 8753E have frequency offset capability to 40 GHz and 6 GHz, respectively.

Figure 4. Vector Network Analyzer, High Dynamic Range Configuration

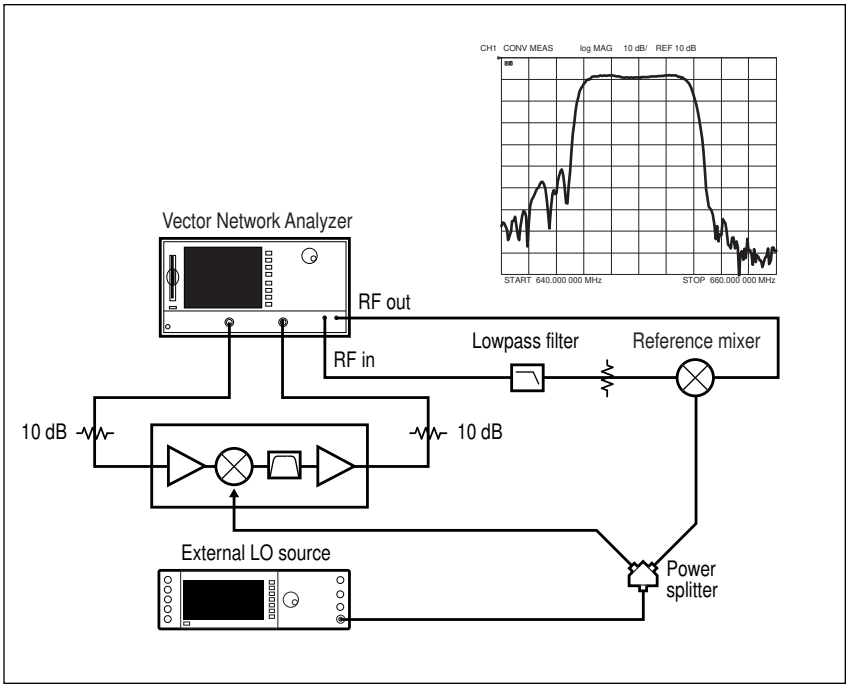

The Upconversion/ Downconversion Technique

A vector network analyzer in normal operating mode can also be configured for frequency-translation measurements. This configuration has two main advantages. First, the instrument can be used to measure a FTD's magnitude and relative phase response without the need for frequency offset. As shown in Figure 5, two mixers are used to upconvert and downconvert the signals, ensuring the same frequencies at the network analyzer's source and receiver ports. Second, this configuration provides a potentially more accurate method for measuring absolute group delay. You can simply measure two mixers and halve the response, accepting the resulting uncertainty. You can also use a more elaborate technique that involves characterizing the amplitude and phase of a calibration mixer and then applying external error correction for the most accuracy. Although this technique is more accurate, it is

also more complicated, requiring an external controller and an operator who is familiar with network-analyzer data transfer and error-term manipulation. Different levels of error correction can be applied to achieve the desired accuracy. This technique will be discussed in more detail in the section titled, *Absolute Group Delay — A More Accurate, Lower Ripple Technique.*

Figure 5. Upconversion/ Downconversion Configuration

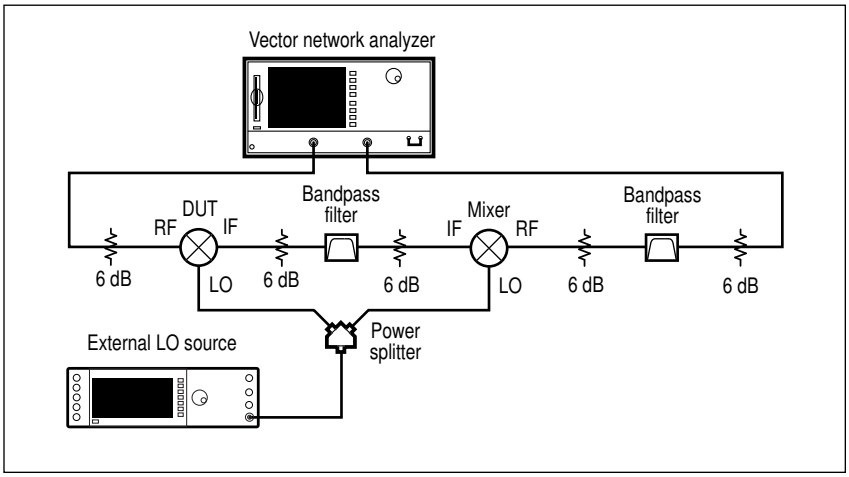

Conversion Loss

Definition and Importance of Conversion Loss

Conversion loss, as shown in Figure 6, measures how efficiently a mixer converts energy from one frequency to another. It is defined as the ratio of the output power to the input power at a given LO (local oscillator) power. A specified LO power is necessary because while the conversion loss of a mixer is usually very flat within the frequency span of its intended operation, the average loss will vary

Figure 6. Conversion Loss

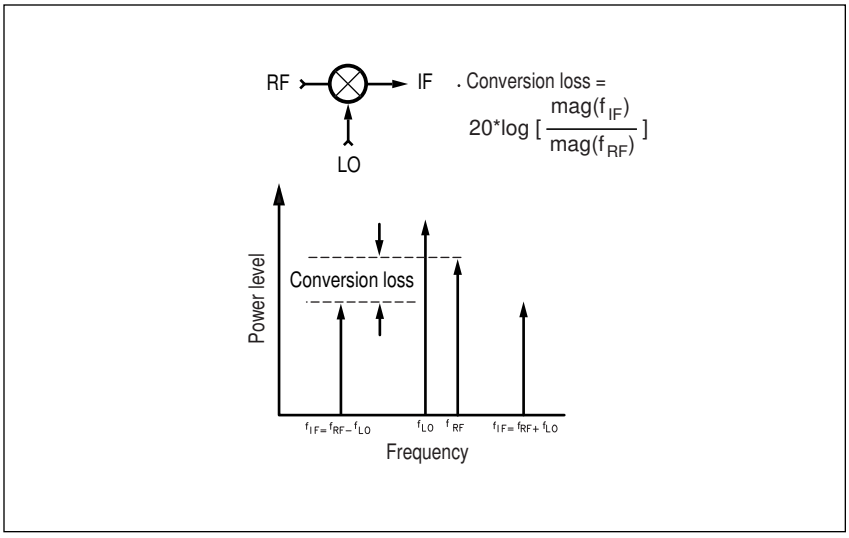

with the level of the LO, as the diode impedance changes. As shown in Figure 7, conversion loss is usually measured versus frequency, either the IF frequency (with a fixed LO) or the RF frequency (with a fixed IF). The configuration for a fixed IF measurement is different from those described up to this point. (See the *Fixed IF Measurement* section.)

Figure 7. Two Types of Conversion Loss Measurements

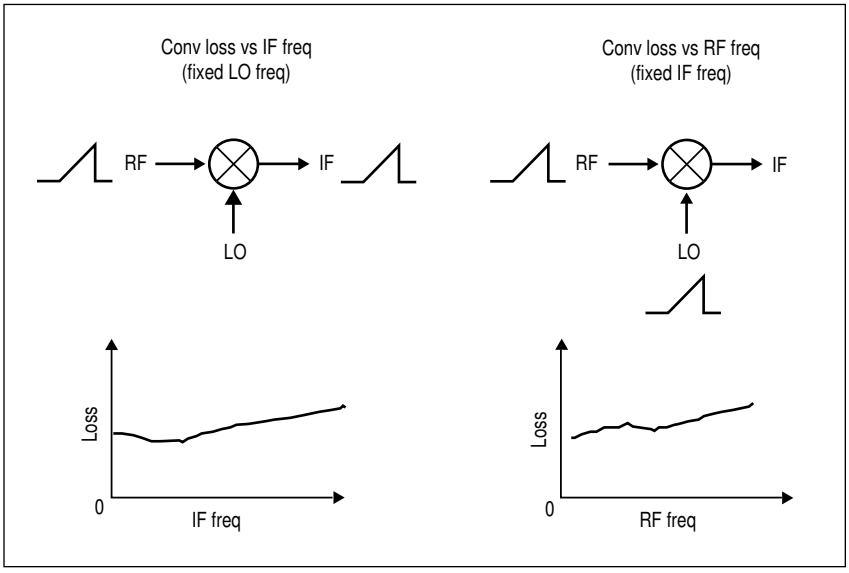

Figure 8 illustrates the importance of a flat conversion-loss response. The DUT is a standard television-channel converter. The input signal consists of a visual carrier, audio carrier and a color subcarrier. Since the frequency response of the converter has a notch in the passband, the color subcarrier is suppressed and the resulting output signal no longer carries a valid color-information signal.

Figure 8. TV Tuner Conversion Loss Example

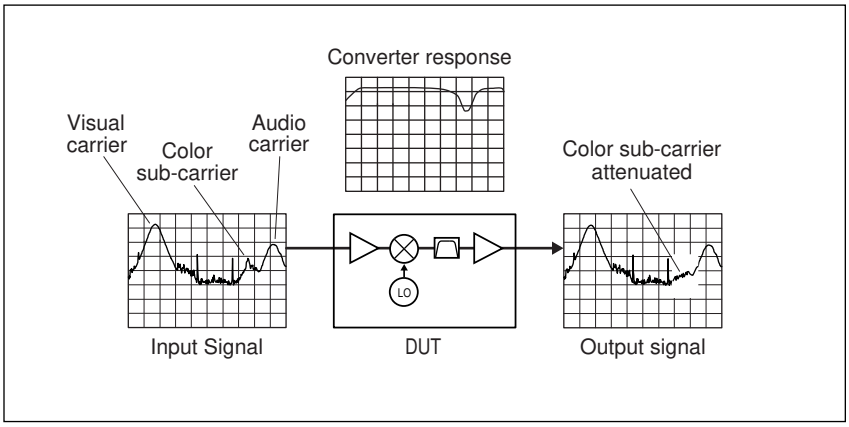

Measurement Considerations

Conversion-loss measurements can be made with either a scalar network analyzer or a vector network analyzer, using the configurations shown in Figures 1 through 5. The measurement uncertainties are different for each type of analyzer. For both types of analyzers, the two main systematic errors are port mismatch and frequency response. The scalar network analyzer approach requires additional care to minimize errors due to the analyzer's broadband detector. For some vector network analyzers, an internal process, called sampling, and phase-lock requirements can also create errors. Next we will examine each of these error terms and explore techniques to minimize their effects.

Mismatch Errors

Mismatch errors result when there is a connection between two ports that have different impedances. Commonly, a device's behavior is characterized within a Z_0 environment, typically having an impedance of 50 or 75 ohms. Although the test ports of a network analyzer are designed to be perfect Z_0 impedances, they are not. The imperfect source and receiver ports of the network analyzer create errors in the calibration stage. Therefore, even before a device under test (DUT) is connected, some errors have already been created in the calibration stage (see Figure 9). Once the DUT is connected, the total measurement uncertainty is equal to the sum of the calibration error plus the measurement error.

Once the DUT is connected, interaction between the DUT's ports and the network analyzer's ports cause mismatch errors. As shown in Figure 9, mismatch effects generate three first-order error signals. The first is interaction between the network analyzer's source port and the DUT's input port. The second is between the network analyzer's receiver port and the DUT's output port.

Figure 9. Mismatch Effects

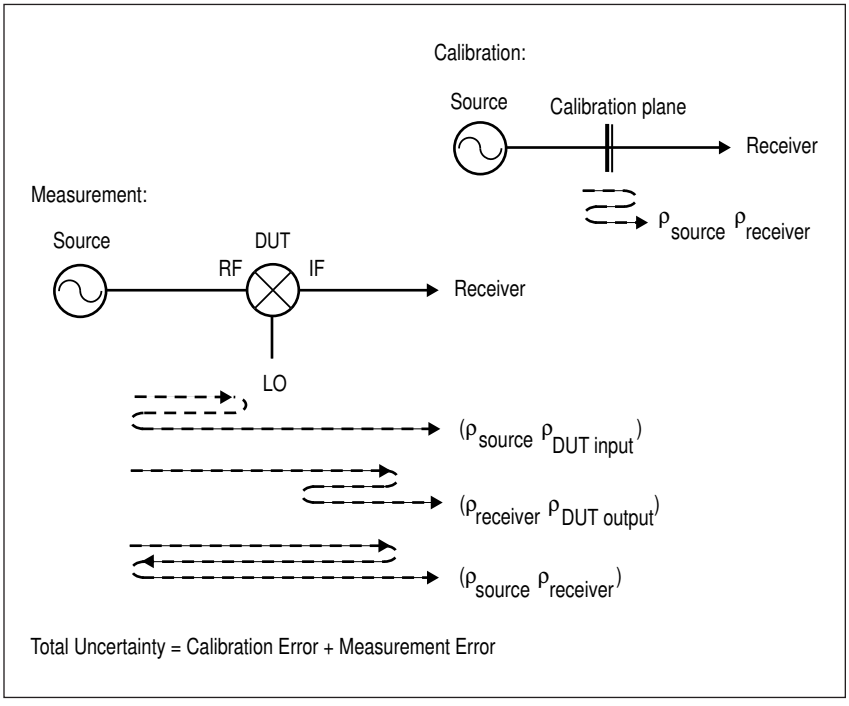

The third is between the network analyzer's source port and receiver port. For an FTD measurement, this third interaction is usually negligible because the conversion loss and isolation of the FTD will attenuate the reflected signals. As frequency translation precludes conventional two-port error correction, attenuators can be used to improve port match.

By adding a high-quality attenuator to a port, the effective port match is improved by up to approximately twice the value of the attenuation. A high-quality attenuator has around 32 dB of port match. The effective match is a function of the quality of the attenuator as well as its attenuation, as shown in Figure 10.

Figure 10. Effective Match as a function of Attenuator's Match.

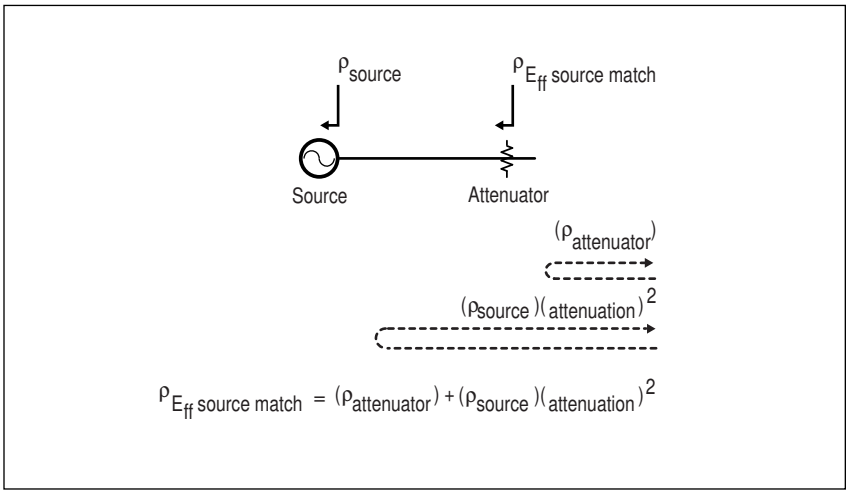

As shown in Figure 11 and Figure 12, a well-matched attenuator can significantly improve the effective port match. For example, a 10-dB attenuator, with a port match of 32 dB, can transform an original port match of 10 dB into an effective match of 25 dB.

Figure 11. Effective Match as a Function of Attenuator's Match (Fixed 10 dB Attenuator).

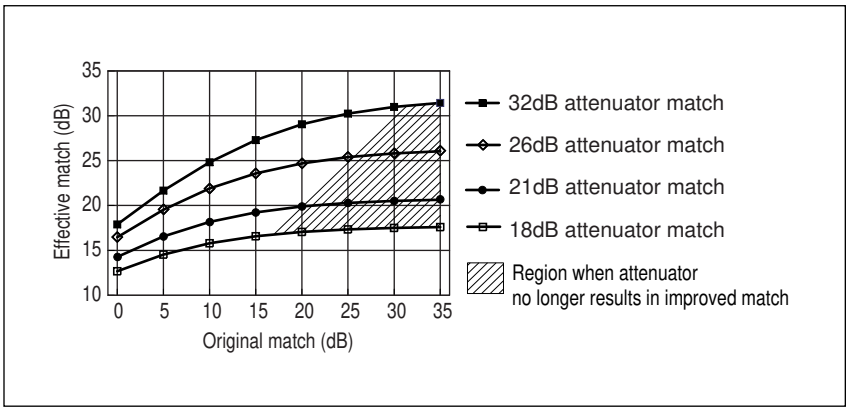

However, as the match of the attenuator approaches the match of the original source, the improvement diminishes. As shown in Figure 12, the larger the attenuation, the more nearly the resulting match approaches that of the attenuator. However, excessive attenuation is not desired since this will decrease the dynamic range of the measurement system. The port match of an FTD can be poor, typically around 14 dB. Therefore, it is recommended that attenuators be placed at the FTD's input and output ports.

Figure 12. Effective Match as a Function of Attenuation (Attenuator Match = 32 dB)

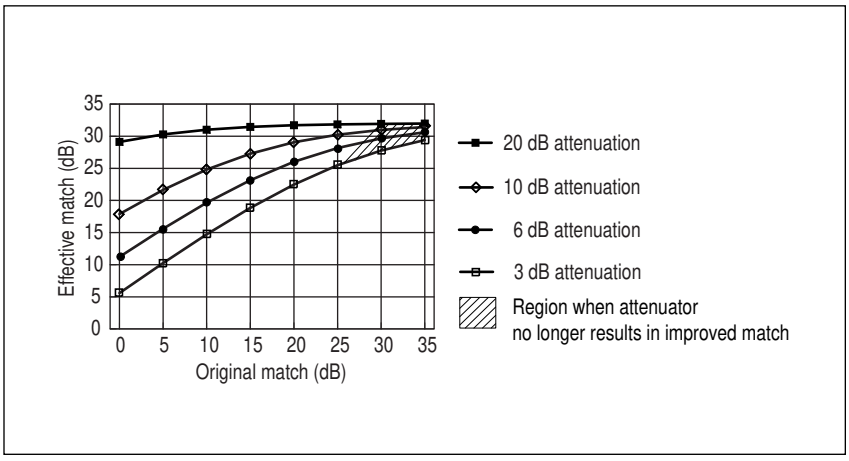

Considerations Unique to the Scalar Network Analyzer

Scalar network analyzers use different detection methods than vector network analyzers that should be considered when testing FTDs. Scalar network analyzers use broadband diode detectors. Although capable of both narrowband and broadband detection, the HP 8711 series, which includes the HP 8712C and HP 8714C vector network analyzers, uses broadband detection for FTD measurements. Therefore, if you use an HP 8712 or 8714, use the same FTD test considerations as you would for a scalar network analyzer.

Importance of Proper Filtering

A scalar network analyzer's broadband diode detector will detect any signal that falls within its passband. Although a broadband diode detector is an economical way to measure FTDs, it also can allow certain detection errors. The diode detector will detect the desired IF signal, as well as other mixing products or spurious signals. To minimize the detection of undesired signals, a filter should be placed at the detector port to pass the desired IF signal but reject all other signals. Figure 13 shows an example of the incorrect measurements that might result when improper IF filtering is used in a scalar network analyzer configuration.

Figure 13. Conversion Loss Response with and without an IF Filter

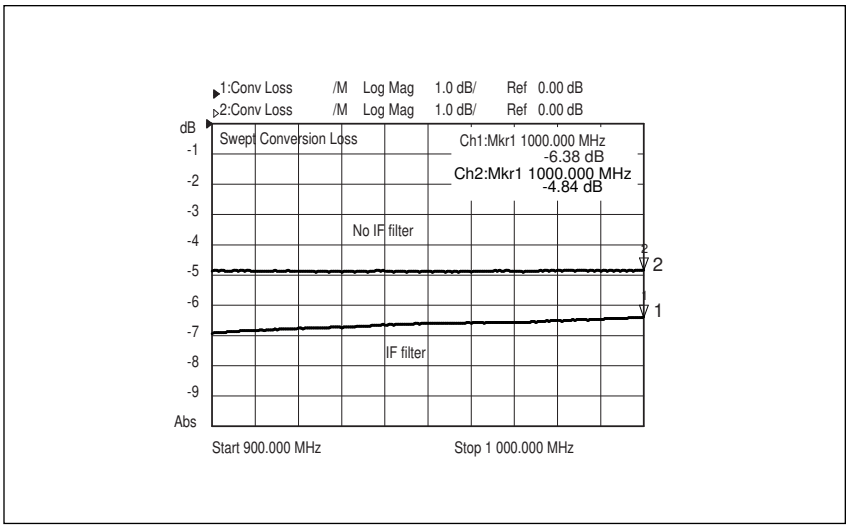

In Figure 13, the conversion loss measurement without the IF filter appears to be better than it really is. The lack of an IF filter generates erroneous results. The broadband diode detector cannot discriminate the frequency of the received signal(s) — it measures the composite response. If the source is set at 1 GHz, it is “assumed” that this is the frequency of the detected signal. Any signal that falls within the passband of the diode detector will be detected. If the output of a DUT is composed of the desired IF signal plus the image frequency, LO and RF feedthrough and other spurious signals, the diode detector will detect the composite of all the signals within its passband. This composite signal will be incorrectly displayed as a response that occurs at 1 GHz.

Frequency Response Error

Without performing any sort of calibration on a scalar or vector network analyzer, the frequency response of the test system cannot be separated from the FTD’s response. One way to correct these errors is to perform a frequency-response normalization or calibration, using a through connection in place of the DUT.

For scalar network analyzers such as the HP 8757D, which very accurately measures absolute power, the normalization calibration can be performed in two steps. See Figure 21. First, the absolute RF power is measured and stored in memory. Second, the DUT is inserted and the absolute IF power is measured. Conversion loss is displayed using the Data/Memory format. The conversion loss value is very accurate since the measurements of the two absolute power levels, RF and IF, are very accurate. Ratioing two very accurate absolute power levels removes the frequency response error. In some cases, a scalar HP 8757D with an internal power calibrator and precision detector can make more accurate conversion loss measurements than a vector network analyzer. In the *Accuracy Comparison of the HP 8757D and a Vector Network Analyzer*

section, error terms are used to illustrate how a scalar analyzer with internal power calibrator can be more accurate than a vector network analyzer.

For analyzers that do not precisely measure absolute power, corrections for the frequency response error are less accurate. The input and output of the DUT are at different frequencies, but the normalization can only be performed over one frequency range. The result is that part of the test system is characterized over a different frequency range than that which is used during the actual measurement.

There are two choices for the frequency range used for the normalization: either the DUT's input (RF source) range, or the DUT's output (receiver) range. The normalization should be done to correct the portion of the test system that contributes the largest uncertainty; for example, this would be the portion with the most loss or frequency roll-off. Systems and components tend to have poorer performance at the higher frequencies, therefore the calibration should normally be performed at the higher frequencies. In general, high-quality, low-loss cables and connectors should be used to minimize frequency-response errors.

For higher accuracy, combine a normalization calibration with external error-term correction. During the normalization, only one section of the test configuration should be connected, either the DUT's input range or the DUT's output range. For highest accuracy, the removed section can be characterized separately. An external computer is used to extract the removed section's S-parameters from the network analyzer. This data is then used to modify the network analyzer's error terms to account for the effects of the removed section.

Considerations Unique to the Vector Network Analyzer

Now that we have covered the important measurement considerations of the scalar network analyzer, let's continue with a discussion of the vector network analyzer. The important considerations include: the need for proper filtering, an accurate and stable LO, and power meter calibration for the most accurate measurements.

Importance of Proper Filtering

A vector network analyzer has a narrowband tuned receiver. Since the received signal is heavily filtered by an internal narrowband IF filter, broadband detection issues encountered by the scalar network analyzer are not present. However, proper filtering is still very important for vector network analyzers with sampler-based receivers, such as the HP 8753E and the HP 8720D.

Sampling Architecture and Issues

A sampler-based receiver consists of a voltage-tunable oscillator (VTO), a pulse generator, and a sampler (switch). The VTO drives the pulse generator, which in turn drives the sampler. As a result, with proper tuning of the VTO, this combination replicates a down-converted input signal at the correct intermediate frequency (IF)

for further processing. This combination is similar to a harmonic mixer in which the harmonics of the LO are generated in the mixer, and the input signal can mix with any harmonic. With proper tuning of the LO, one of the LO harmonics is offset from the input signal to produce the correct IF signal.

Since there are many LO harmonics, any signal (desired or not) that is one IF away from any of the LO harmonics will be downconverted to the network analyzer's IF and detected. To illustrate this sampler effect, let's use the HP 8753E as an example.

The IF of the HP 8753E vector network analyzer is 1 MHz. Errors might result because the incoming signal is not filtered until after it is downconverted to the IF. If there is only one signal at the receiver, this signal will mix with one LO harmonic and is properly downconvert to 1 MHz. However, if there are multiple signals that are 1 MHz away from any of the LO harmonics, these signals will be downconverted to 1 MHz, which creates erroneous responses.

Figure 14 illustrates an example of this sampler effect where the desired IF output signal of the mixer is 110 MHz. In order to correctly detect this signal, the HP 8753E will use a VTO of 54.5 MHz, where its second harmonic (109 MHz) will properly downconvert 110 MHz to the desired 1 MHz IF signal. In the illustration, we show two mixer products (6 LO-2RF and 9 LO-RF) that would also produce IFs at 1 MHz. Notice that these two spurs occur on either side of the LO harmonics (18 VTO and 42 VTO, respectively), but as long as they are 1 MHz away, they will be downconverted to 1 MHz. Aside from the signals which

Figure 14. Diagram of Spurious Measurement Responses

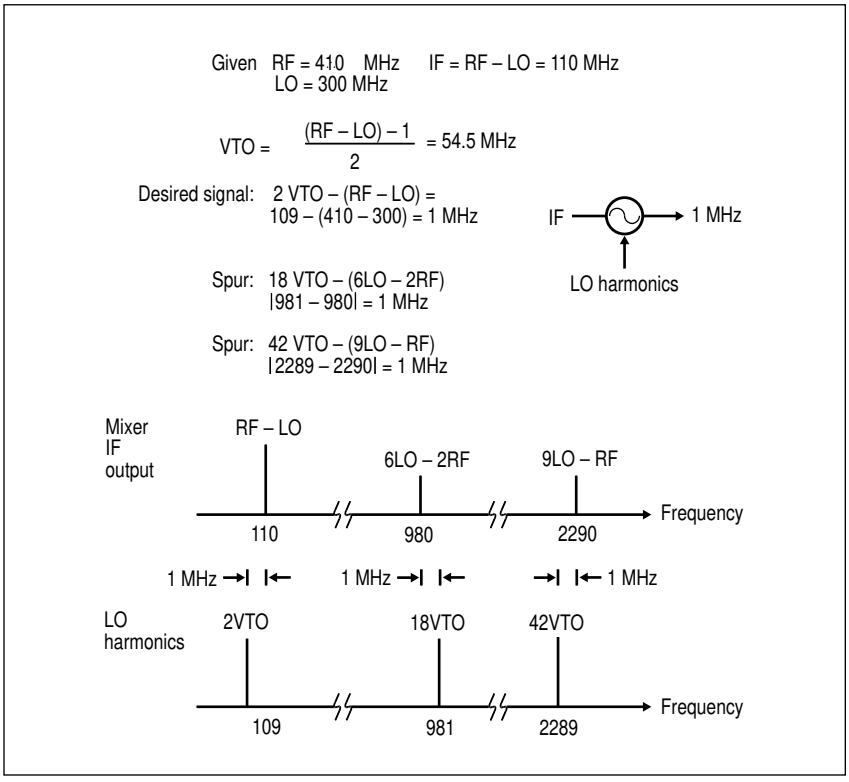

downconvert to 1 MHz, signals that will directly pass through the finite passband of the 1 MHz bandpass filter can cause problems. In the HP 8753E, IF BWs from 10 Hz up to 6 kHz are available. As shown in Figure 15, wide IF BW allows any signal that falls within the passband to be detected. For this reason narrow IF BWs are recommended. However, narrower IF BWs result in slower measurement speed.

Several techniques can significantly minimize spurious responses. One technique is to use adequate filtering at the network analyzer's receiver port. Another technique, as illustrated in Figure 15, is to reduce the instrument's IF bandwidth. Reducing the IF bandwidth will more selectively filter signals in the instrument's IF signal path. A third technique is to avoid frequency spacings equal to the IF. In the case of the HP 8753E, the IF is 1 MHz. Therefore 1 MHz and multiples thereof should be avoided when choosing frequencies and frequency spacings. A fourth technique is to avoid or eliminate certain frequencies that might cause spurious responses. A spur prediction program, available in the HP 8753-2 product note, predicts the frequencies that might cause spurious responses. Modifying the frequency selection or use the analyzer's frequency list mode, in which the internal source will step from one continuous wave (CW) signal to the next, to avoid these frequencies. This program, written in HP BASIC 5.0, is customized for the HP 8753 series and swept IF mixer measurements, although it can be modified for other measurements such as fixed IF. This program only predicts the possible occurrence of a spur — it does not predict its power levels, and it does not consider RF and LO subharmonics.

Figure 15. Effects of IF BW on Spurious Measurement Responses

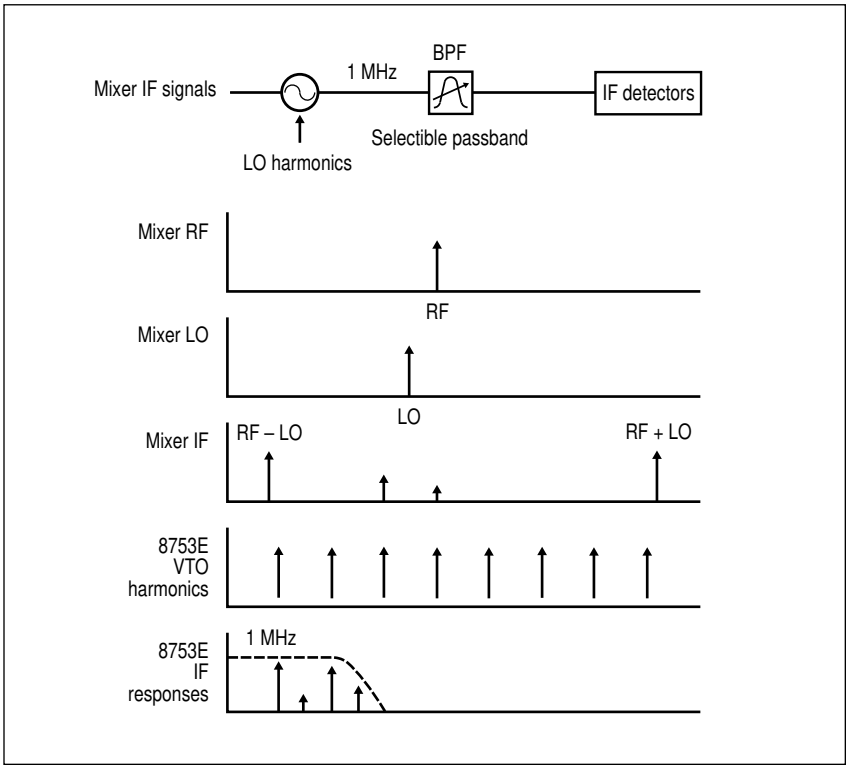

R-Channel Phase-Locking Considerations

For FTD tests, using frequency offset mode with a vector network analyzer, many times you are required to remove the R-channel jumper and input a signal into the R Ref-In port. Once an external signal is introduced into the R channel, proper filtering at the Ref-In port is essential. Certain requirements must be met in order for the R channel to phaselock properly. First, the signal into the R channel must be within a specified power level throughout the entire IF range. For example, in the HP 8753E vector network analyzer, the R-channel signal must be between –35 dBm and 0 dBm throughout the selected IF range, otherwise proper phase lock will not occur. If the R-channel filter does not cover the entire IF range, modifying the selection of the IF range accordingly will eliminate the phase-lock error. For example, if the IF range is set from 10 MHz to 300 MHz, but the R-channel filter is already rolling off at 300 MHz, then change the IF stop frequency to around 250 MHz, or use a different filter. The second requirement is that the R-channel sampler needs to phaselock with the correct signal. If there are spurious signals entering the R-channel sampler, it might try to establish phase lock with an improper frequency. This situation can be avoided with proper R-channel filtering. (If you are using the HP 8712C or HP 8714C vector network analyzers, R-channel considerations are irrelevant because broadband detectors are used.)

LO Accuracy and Stability

For the vector network analyzer, the use of an accurate, stable LO is required for accurate magnitude and relative phase measurements. As shown in Figure 3, a network analyzer in the frequency offset mode will automatically set its internal source to sweep over the corresponding RF range once you have entered the necessary information (i.e., IF range, LO information, upconversion or downconversion, RF <> LO). Therefore, if the LO source is not accurate, a network analyzer will not receive the anticipated IF signal. As a result, the IF signal can fall on the skirts of the IF filter or worse, it can fall entirely outside of the filter passband. In the first case, this inaccuracy is transferred to the measurement results, and in both cases, phase lock can possibly not even occur.

This LO accuracy and stability requirement can be explained with the help of Figure 16, which illustrates the block diagram of the HP 8753E in frequency offset mode. At the start of the sweep, the RF source is pretuned to the IF frequency plus the LO offset, then the main phase-lock loop (PLL) is locked up. The receiver will sweep over the IF range, and the source will track it with the fixed offset. As shown, the mixer's IF signal is downconverted in the R-channel sampler to provide the 1 MHz phase-lock signal. Therefore, the LO source must be stable and accurate in order to provide an LO signal that will properly convert the mixer's RF input to its desired IF output. This mixer's IF signal, once downconverted by the sampler, is compared to an internal 1-MHz reference signal where a resulting voltage, proportional to their phase difference, is used to fine-tune the RF source. If the mixer's IF signal is too far from the expected receiver's frequency, then it might lie outside the acquisition range of the PLL. The phase-lock algorithm will not work and a phase-lock error is displayed. For example, the HP 8753E requires a LO frequency accuracy of within a few kHz of the nominal frequency.

Figure 16. HP 8753E Block Diagram of Frequency Offset Mode

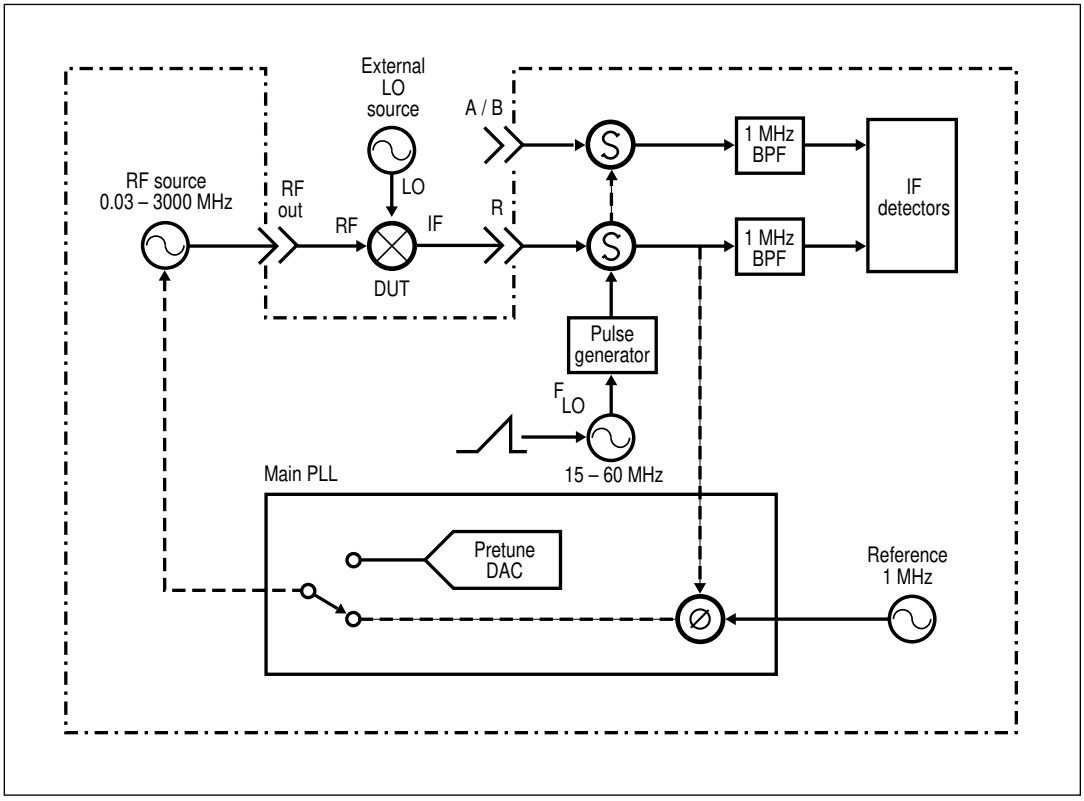

Power Meter Calibration

Some vector network analyzers, such as the HP 8753E and the HP 8720D, are capable of using power meters to enhance their source and receiver accuracy. This power-meter calibration can significantly minimize frequency response error, as well as correct for some mismatch effects. The following discussion relates to a downconverter measurement, although the same concepts also apply for upconverters. It is a three-step process:

1. Perform power-meter calibration over the IF range.
2. Perform response calibration over the IF range.
3. Perform power-meter calibration over the RF range.

The power-meter calibration procedure needs to be done correctly or it can lead to unexpected errors. Let's look at each step for performing a power-meter calibration.

Step 1. Perform power-meter calibration over the IF range.

The purpose of this step is to calibrate the network analyzer's source for a very accurate power level over the IF range. After this, a response calibration completely corrects the receiver's frequency response over the IF range. With the power-meter calibration, the accuracy of the power meter is transferred to the network analyzer.

First, the power meter is preset and zeroed. The network analyzer is set to sweep over the IF range.

Before connecting the equipment as shown in Figure 17, you need to ensure that the R channel will phase lock properly. For network analyzers, such as the HP 8753E, that do not have an internal/external switch for the R channel, you must turn on the frequency offset before disconnecting the R-channel jumper. This step is important since it prevents the network analyzer from attempting to do a "pretune calibration" when there is no valid R-channel signal. If the network analyzer attempts a pretune calibration without a valid R-channel signal, the pretune constants would be invalid. Once the pretune constants are erroneous, proper phase lock will not occur even with a valid R-channel signal. If this should happen, reconnect the R-channel jumper and allow the automatic pretune calibration to fix itself. This step is not necessary for an HP 8720D with Option 089 which provides an internal/external R-channel switch.

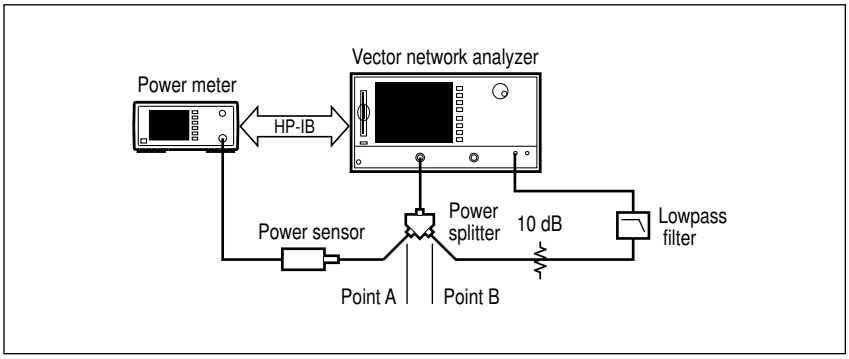

Figure 17. Configuration for Power Meter Calibration over the IF Range

At this point, the LO frequency should be at 0 Hz, so that the source and receiver are at the same frequency. Connect the equipment as shown in Figure 17. The power at point A and B are assumed to be the same, but actually are not. Therefore, it is important to make points A and B as symmetrical as possible. For example, if point B is connected to one arm of the power splitter, then ideally the power sensor should also be connected directly to the other arm of the power splitter (that is, without any additional accessories such as an adapter or cable). Figure 17 is configured so that the mixer's IF port will eventually be connected to point B.

A 0 dBm power level is optimal. Power meters are most accurate at 0 dBm because they use a precision 50-MHz 0-dBm source as their reference. If the frequency response table of the power meter is used and the measured power is close to 0 dBm, very high measurement accuracy can be achieved (typically better than 0.05 dB). However, point B differs from point A by the tracking error of the splitter and this adds approximately another 0.2 dB of uncertainty. Select the network analyzer's source power so that point A and B will be 0 dBm.

Set the power-meter calibration power level. The number of calibration points should be set at this time. Using no more than 26 or 51 points usually yield very good results. The number of points can then be increased before calibrating the network analyzer's receiver. The power-meter calibration constants will be interpolated over the new points. Another time-saving technique is to use one receiver calibration for different frequency ranges. This is accomplished by calibrating over the largest frequency span, then turning calibration interpolation on and changing the span and number of points. Interpolation errors are quite small, usually adding less than 0.05 dB to the total uncertainty.

During the power-meter calibration, it is important to connect the equipment as shown in Figure 17. If point B is unterminated, errors will result due to reflections at this port. Terminate point B with the components within the IF path, such as the attenuator, filter and cabling. This closely reproduces the same condition during the calibration as in the transmission measurement. With the components connected, the power-meter calibration will account for mismatches due to these components (such mismatches contribute to unleveled power levels at both points A and B). An alternative technique would be to terminate point B with a good Z_0 termination.

During the power meter calibration, via the HP-IB interface, the network analyzer will automatically read the output from the power meter at each frequency point and adjust its source power exactly by successively resetting and measuring the power. In most instances, two readings are sufficient to settle to within 0.02 dB of the required power at point A.

Step 2. Perform response calibration over IF range.

With a very accurate power level at point B, now calibrate the network analyzer's receiver for accurate absolute power measurements over the IF range.

The equipment is still connected as shown in Figure 17. As mentioned earlier, the power into the R channel must be within the correct power range (–35 to 0 dBm, in the case of an HP 8753E), throughout the selected IF range, or proper phase lock will not occur.

Examine the R-channel response. The values displayed for the R channel can appear surprising. Notice that the values displayed are positively offset by approximately 16 dB. For example, with a signal of 0 dBm, the R channel will display approximately +16 dBm. Normal operation usually displays ratioed measurements (A/R or B/R). A mathematical offset is used to account for the differences between the R-channel path and the A-or B-channel path. The network analyzer cannot discern that the signal is directly applied to the R sampler, so the signal level is displayed approximately 16 dB too high. This offset and the frequency-response error are accounted for after a response calibration is performed on the R channel.

Go to the calibration menu and perform a response calibration. The through standard in Figure 17 is composed of the attenuator, filter, and cabling. After the response calibration, the R channel will indicate 0 dBm. At this point, the accuracy of the power meter has been transferred to the network analyzer's receiver at point B. In addition, the analyzer has accounted for the frequency response of the through standard. Point B is now calibrated for a very accurate 0 dBm absolute power reading.

Step 3. Perform power-meter calibration for RF range.

This last step, another power-meter calibration over the RF range, provides a very accurate power level at the RF port of the mixer.

An alternative is to do one power-meter calibration for both the RF and IF ranges. As mentioned earlier, power-meter calibration interpolation is a useful, time-saving tool. To save time, the first power-meter calibration can be performed over a frequency range that encompasses both the RF and IF range. Then turn on interpolation to preserve the calibration in the separate RF and IF ranges. This does compromise accuracy to some extent.

Connect the equipment as shown in Figure 18. Once the appropriate information such as the LO information, upconversion/downconversion, and RF <> LO have been set, the network analyzer will automatically set the RF range. After selecting the desired calibration power at port B, perform the power-meter calibration.

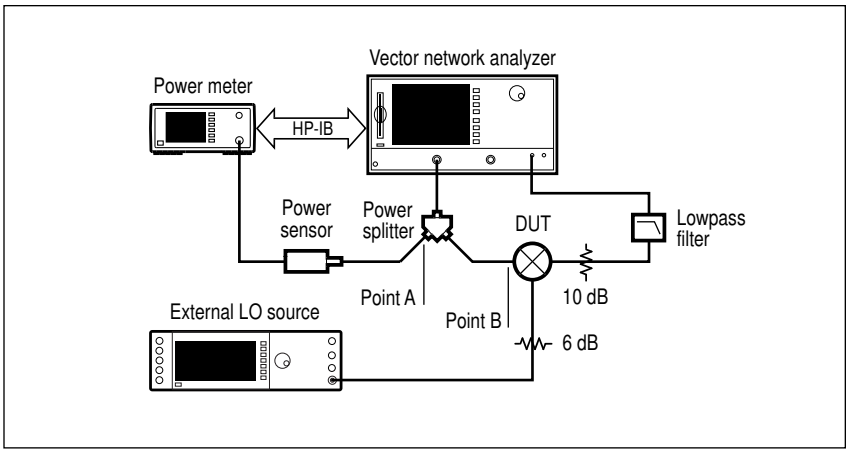

Figure 18. Configuration for Power-Meter Calibration over the RF Range.

Upon completion of the power-meter calibration, a very accurate reading of the DUT's absolute output power is displayed on the R channel, which has been calibrated to 0 dBm. Notice that the reading is not necessarily the conversion loss of the DUT; it is the absolute power reading of the DUT's output power. For example, if the DUT has a 6 dB conversion loss when stimulated with –10 dBm of RF input power, the R channel will display –16 dBm. If you want the R channel to display the conversion loss directly, then in Step 1 select the power at point B to be the RF drive power for the DUT's RF port. The disadvantage here is some loss in accuracy; power meter calibration is most accurate at 0 dBm power level.

Power-Meter Calibration for a High-Dynamic-Range Measurement

For a high-dynamic-range configuration, Figure 19 is analogous to Figure 17 above. Notice that the R-channel jumper is connected, since a valid signal is required into the R channel for phase locking. In this configuration, the R channel is used only for the purpose of phase locking. It is not included as a direct path in the actual measurement. This is the high-dynamic range configuration you should use for performing Steps 1 and 2.

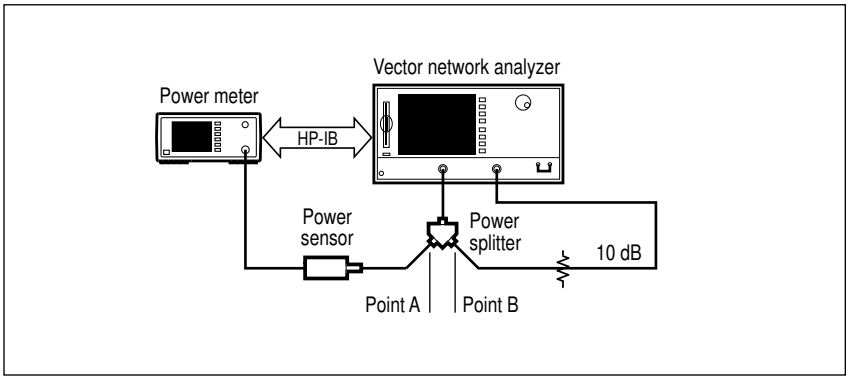

Figure 19. Power Meter Calibration over the IF Range, High-Dynamic-Range Configuration.

Figure 20 is analogous to Figure 18. This high-dynamic-range configuration is useful for devices that includes a filter, as shown. A filter is especially important in the R channel to suppress spurious signals that can cause false phase locking. A filter into the B channel might not be necessary. This is the configuration you would use for performing Step 3.

Figure 20. Power Meter Calibration over the RF Range, High-Dynamic-Range Configuration

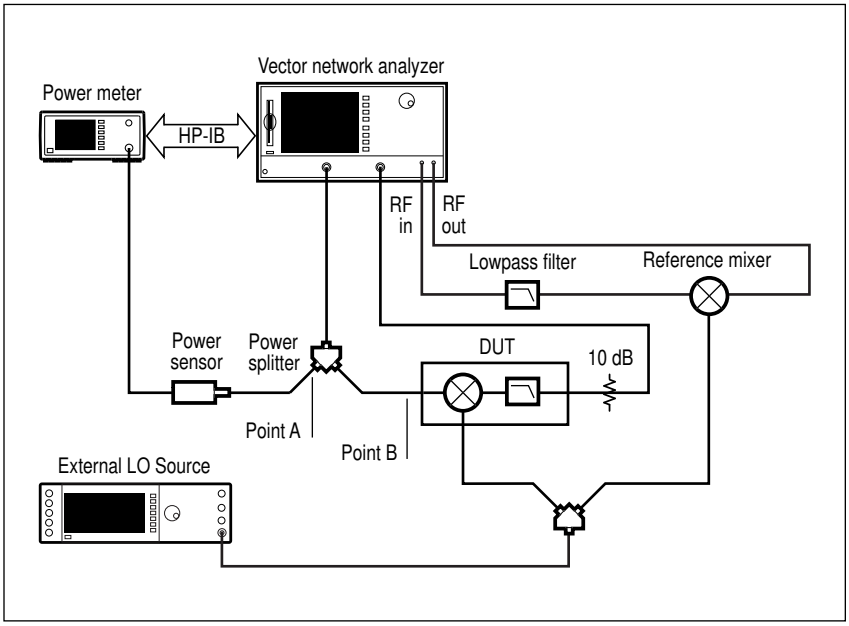

Accuracy Comparison of the HP 8757D and a Vector Network Analyzer

In some cases, an HP 8757D with an internal power calibrator and precision detectors will make more accurate conversion loss measurements than a vector network analyzer with power meter calibration. To illustrate the difference in accuracy, let's look at the the error terms involved in a downconverter measurement in either case.

In Figure 21a, the source is set to the RF range. The precision detector very accurately detects the absolute power at its port over the RF range. The resulting errors are m_1, the mismatch error, and $r_{detector\ RF}$,the uncertainty in the detector's calibration over the RF range. The $r_{detector\ RF}$ error is very small, approximately ± 0.18 dB.

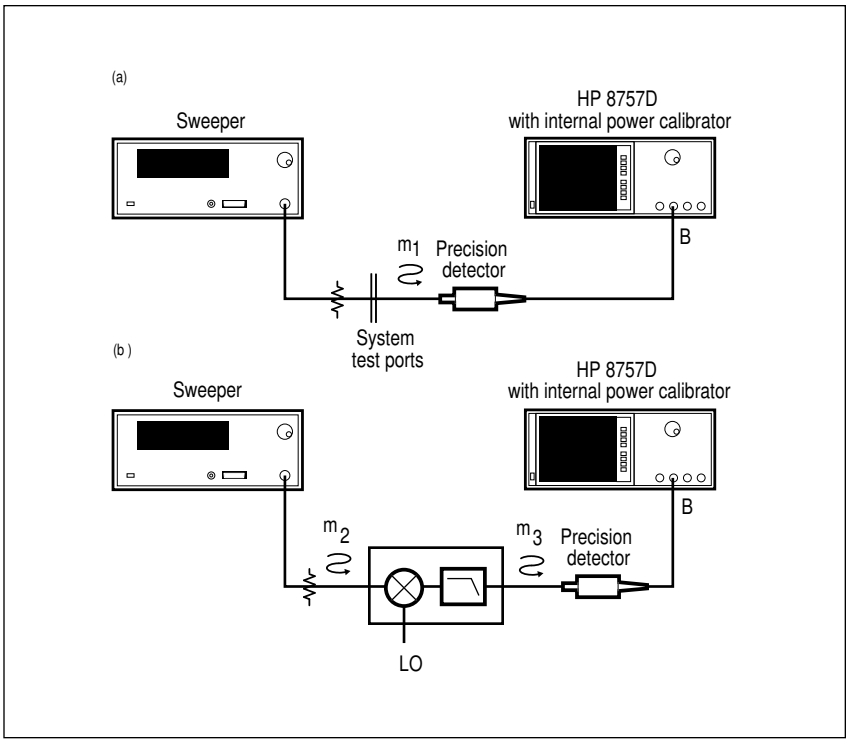

Figure 21. (a) Absolute Power Measurement over the RF Range (b) Absolute Power Measurement over the IF Range.

Next, the RF response is stored into memory. The purpose of this step is to correct for the frequency response of the attenuator and the source, $r_{\text{source RF}}$.

In Figure 21b, the DUT is connected. The errors consist of mismatch errors, m2 and m3 , and the uncertainty of the detector's calibration over the IF range, $r_{\text{detector IF}}$. The latter error is very small. Notice that an attenuator is not used at the output of the DUT since the precision detector measures most accurately at its port. If additional devices, such as an attenuator or filter, are added, their effects will add additional calibration steps and therefore added uncertainty. This configuration is especially advantageous for FTDs with internal filters.

In this HP 8757D calibration and measurement, the total uncertainty is equal to the sum of three uncorrected mismatch error terms, m_1, m_2, and m_3. The detectors errors are very small and are negligible.

With the vector network analyzer with power-meter calibration, five mismatch errors result. Let's take a closer look at the error terms involved in a vector network analyzer with power meter calibration measurement.

In Figure 22a, the source is set to the IF range. A power meter calibration is performed. The errors consist of the mismatch error, m_1, and the source frequency response error over the IF range, $r_{\text{source IF}}$. The latter error is small.

In Figure 22b, a normalization calibration is performed. Errors = $m_2 + r_{\text{receiver IF}}$, where $m_2 = m_1 + r_{\text{detector IF}}$ and $r_{\text{receiver IF}}$ is the receiver frequency response error over the IF range.

In Figure 22c, the source is set to the RF range and a power meter calibration is performed. Errors = $m_3 + r_{\text{source RF}}$, where $r_{\text{source RF}}$ is the source frequency response error over the RF range.

In Figure 22d, the DUT is connected. Mismatch errors, m_4 and m_5, are generated. As illustrated, the total uncertainty is due to five uncorrected mismatch error terms, m_1, m_2, m_3, m_4, m_5. The other errors are relatively small.

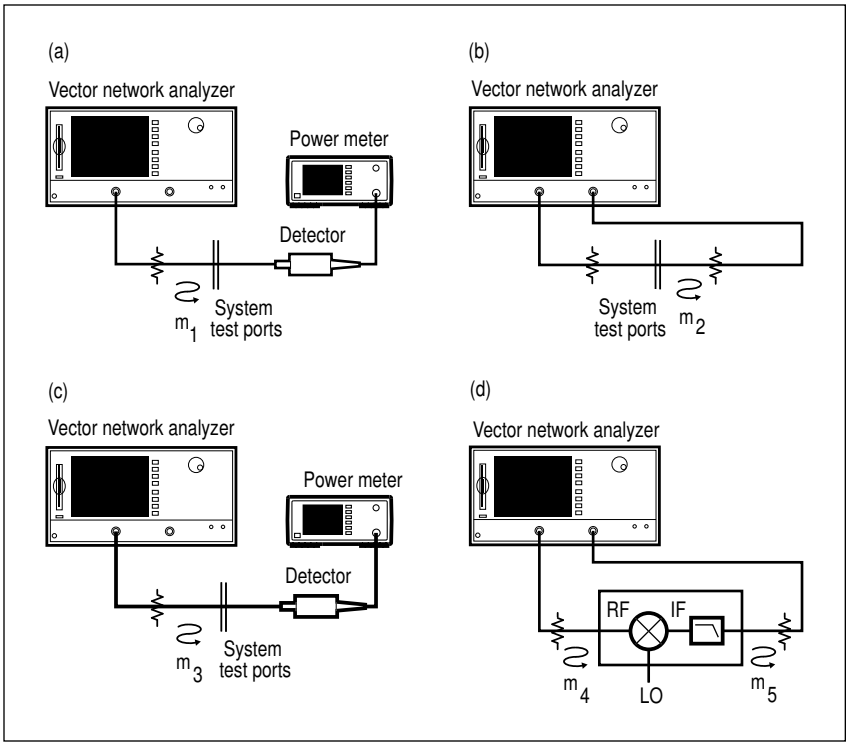

Figure 22. (a) Power Meter Calibration over the IF Range. (b) Normalization Calibration over the IF Range. (c) Power Meter Calibration over the RF Range. (d) DUT is Measured.

In summary, the HP 8757D with its internal power calibrator and precision detectors can be more accurate than a vector network analyzer with power meter calibration since there are less connections, resulting in less mismatch effects and therefore less measurement uncertainty. However, the vector network analyzer is capable of further error correction using error-term manipulations with an external computer. With additional error correction, the vector network analyzer might be the more accurate instrument. In the section, *Absolute Group Delay — A More Accurate, Lower Ripple Technique*, procedures for external error-term manipulations are discussed.

Fixed IF Measurements

When a communication system receives a signal using a superheterodyne receiver, the information is downconverted to an appropriate frequency called the intermediate frequency. The components in the IF section of the receiver usually provide most of the gain and frequency selectivity of the communication system. Using a fixed IF allows a designer to optimize the IF filtering and amplification which yield the highest performance. Typical IF frequencies for FM radios are 10.7 and 21.4 MHz, radar receivers are 30 and 70 MHz and satellite receivers are 70 and 140 MHz.

The other way in which conversion loss or gain flatness can be measured is by keeping the IF at a constant frequency. This is known as a fixed-IF measurement. In order to accomplish this, the LO must sweep in conjunction with the RF input signal, keeping a constant frequency offset equal to that of the IF. In many cases, this measurement more closely matches the operation of the DUT in the actual application.

The most common way to perform this measurement is to use the vector network analyzer in a tuned-receiver mode (without frequency offset). Figure 23 illustrates this configuration. As shown, two external sources are used. One external source provides the RF signal and the other provides the LO signal. Both sources sweep in a stepped-frequency mode under the direction of a measurement controller via the HP-IB bus. This measurement is an ideal candidate for automation using the built-in test-sequencing or IBASIC capability of many modern network analyzers. Also, notice that an external reference must be connected between the VNA and the sources (i.e. a 10 MHz reference). When testing a tuner with a fixed-IF sweep, the controller must be able to tune the internal LO. If an analog voltage is used, then a programmable power supply or digital-to-analog converter is needed. If the LO is tuned digitally, the proper interface must be used.

Testing a mixer under fixed IF conditions can also be accomplished with one external source and the network analyzer under the control of an external computer. The configuration is very similar to Figure 23, except there is only one external LO source and a computer interface for both the network analyzer and the external LO source. The configuration is shown in Appendix C.

Two cases should be considered for a fixed IF measurement. In both, the LO and RF frequencies are stepped over their respective ranges but in each case the network analyzer is configured slightly differently.

Figure 23. Fixed IF Configuration

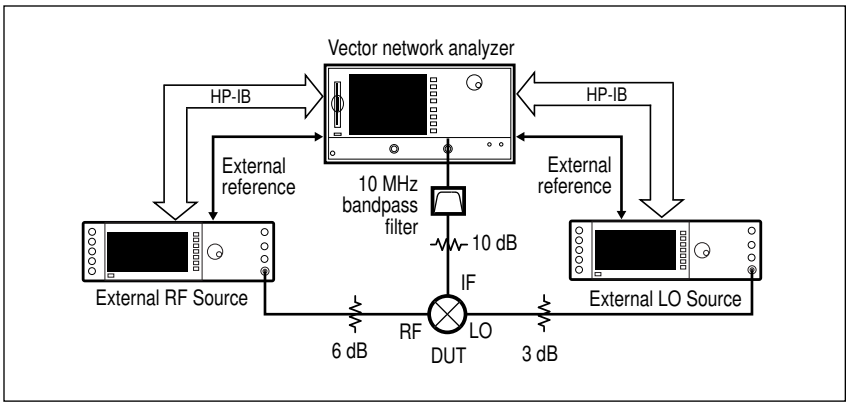

The first considers the FTD as a downconverter, where the RF output frequency of the analyzer is stepped over the RF range and the analyzer measures a fixed IF frequency at the R-channel input. The second uses the FTD as an upconverter and the output frequency of the analyzer (test port 1) is fixed at the IF frequency. The analyzer must measure the stepped RF frequency at the R-channel input. Both measurements are accomplished using the frequency offset mode capability available on many modern network analyzers. This tuned receiver mode allows measurement to be made at frequencies other than that of the analyzer's internal source.

The *Appendix* provides a program for a fixed IF measurement on a mixer that operates as a downconverter. This HP Basic for Windows program uses the HP 8753E as the RF source and receiver and the LO signal is provided by a HP ESG-D3000A signal generator. The LO source commands are written in SCPI, so any compliant signal generator will work. The program sets an absolute power level to the mixer's RF input port and measures the absolute power level at the IF port. The analyzer's receiver is first calibrated at the fixed IF frequency, then the analyzer's RF source level is set. The difference between the two signals is the conversion loss of the mixer under test. The program assumes the RF drive level from the test port remains constant over the stepped frequency range and also does not include insertion loss from the test port cable. The accuracy of the measurement can be enhanced by including a power-meter calibration at the IF and RF ranges as detailed in the HP 8753E Operating Manual. Care must be taken to ensure adequate signal level to the R-channel input or the system will not phase lock to the IF signal. The R-channel input requires a signal level between 0 dBm and –35 dBm. Adequate filtering is also required to prevent spurious response from entering the receiver.

Relative Phase Measurements

Measuring mixer relative phase parameters such as tracking, relative phase linearity and group delay requires a vector network analyzer. Relative phase between two mixers can be measured, but the absolute phase response of a single mixer cannot. In order to make a phase measurement of a FTD, a second mixer is needed to provide a reference phase signal. This reference mixer is needed because when the analyzer is in frequency-offset mode, the source and receiver function at different frequencies and phase is not defined between two different frequencies. This reference mixer needs to be driven by the same RF and LO signals that are used to drive the mixer under test. The IF output from the reference mixer is applied to the reference phase-lock R channel of the vector network analyzer.

Relative Phase and Magnitude Tracking

The capability to measure the amplitude and relative phase match between frequency-translation devices such as mixers is increasing in importance as the number of multichannel signal processing systems increases. These multichannel systems, such as direction-finding radars, require that the signal transmission through each channel be amplitude- and phase-matched. To achieve the required match between channels, each channel usually is manufactured with matched sets of components.

The match between FTDs is defined as the difference in amplitude and relative phase response over a specified frequency range. Also, the tracking between FTDs is measured by how well the devices are matched over a specified interval after the removal of any fixed offset. For example, this interval can be a frequency interval or a temperature interval, or a combination of both.

The configuration shown in Figure 24 can be used to make magnitude and relative phase matching measurements. First, one DUT is measured and its response is stored in memory. Then the second DUT is measured and the analyzer's data/memory feature is used to compare them. The analyzer accounts for the response of the test system since the two DUTs are measured with exactly the same conditions.

Figure 24. Mixer Matching — Magnitude and Group Delay

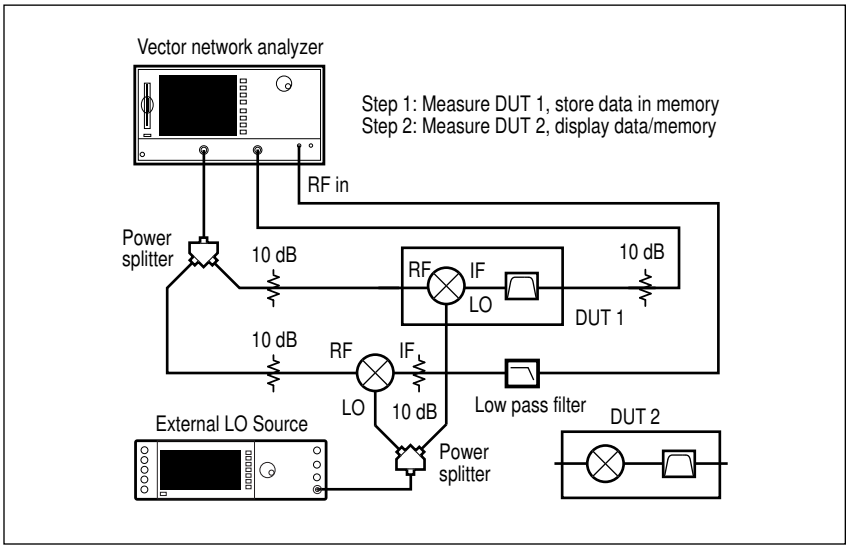

Figure 25. Tracking Responses

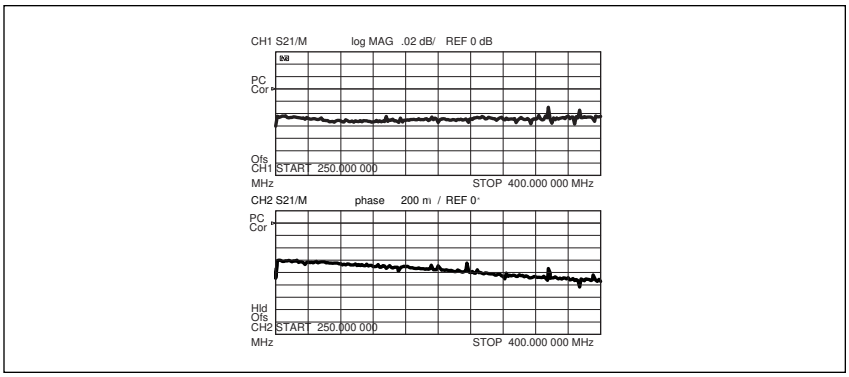

Figure 25 shows the magnitude and relative phase match between the two DUTs.

If both DUTs must be measured simultaneously (for tuning), then you can place one DUT in the B channel and one in the R channel. However, in this configuration you are limited by the dynamic range of the R channel. Therefore, the DUT in the R-channel path should not have a filter. If it does, you can only view the DUT's passband match. For two DUTs with internal filters, you cannot simultaneously view the response using the configuration in Figure 24.

Figure 26 illustrates a configuration that takes advantage of the high dynamic range of the A and B channels. The analyzer compares channel A and B and can be used to actively display A/B responses, or for making high-dynamic-range measurements such as tracking of out-of-band responses. In this case, the R channel is used only for phase locking.

Figure 26. Simultaneous Tuning and High-Dynamic Range Configuration

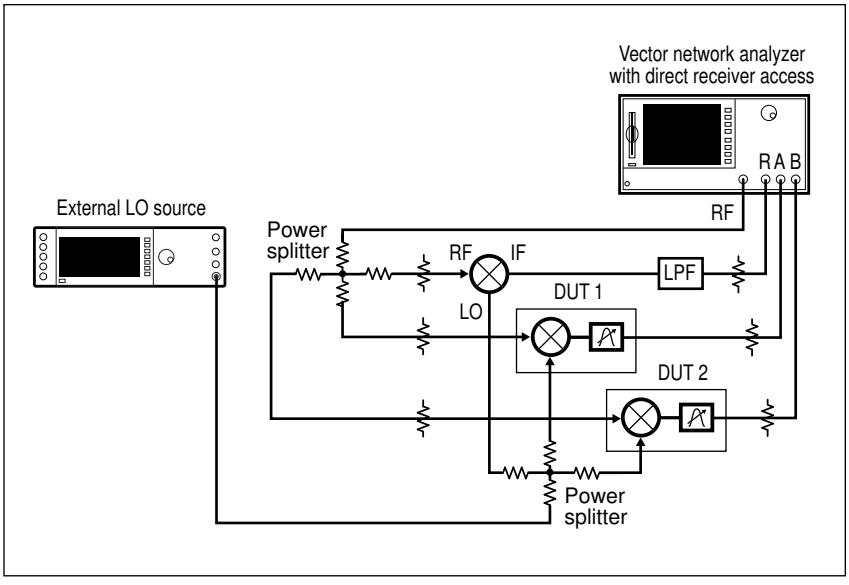

Group Delay

Group delay is a measure of a signal's transition time through a device. Relative group-delay measurements can be made with the same setup as that shown for relative phase measurements.

Important Parameters when Specifying Group Delay

The result of a group-delay response depends on many measurement factors, including aperture, averaging and IF bandwidth. When using a network analyzer to obtain a group-delay response, we calculate the slope of the phase over a frequency increment. As illustrated in Figure 27, if we want to obtain the group delay at a particular frequency, we do not calculate the tangent at that frequency point. Rather, we find the values of the frequency points on either side of the frequency of interest and calculate the corresponding phase slope. As shown, the two methods yield different results. The frequency points on either side are determined by the aperture that is used. The default aperture is equal to the smallest increment between the frequency points.

Aperture = frequency span / (number of points – 1)

Figure 27. Group Delay

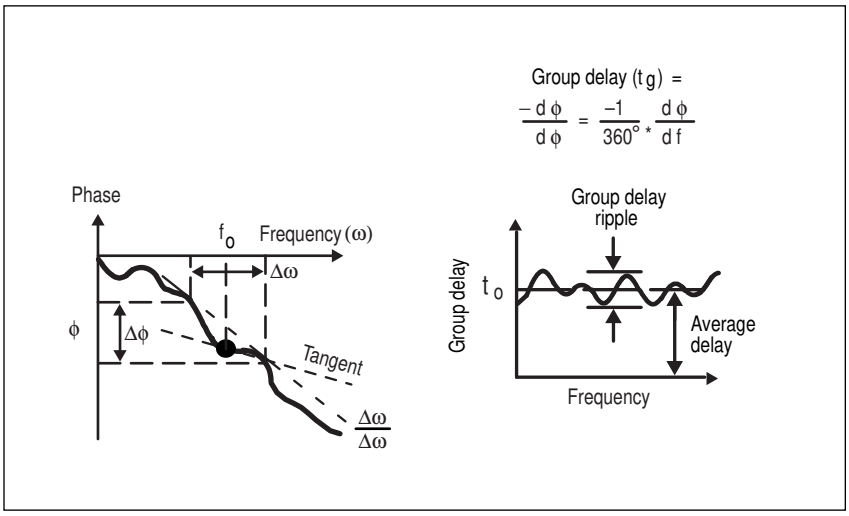

The aperture, which is used to calculate group delay, can be adjusted. This adjustment control is called the "smoothing aperture." With the smoothing aperture control, you can adjust the network analyzer to use a wider frequency increment to calculate the phase slope, although you are limited to 20% of your frequency span.

Figure 28 illustrates the trade-off between resolution and noise as a function of aperture. Any effects in the phase response directly affect the group-delay response. For example, noise in the phase response directly translates into noise in a group-delay response. It is the aperture that determines the information that is transferred from one response to the other. For example, if you set a narrow aperture, the noise in the phase response becomes more significant, making the group-delay response noisier. At the same time, a narrow aperture allows you to see variations in the group-delay response, which you would miss otherwise. But, if you increase the smoothing aperture too much you begin to lose resolution since the peaks start to disappear. Figure 28 illustrates how dramatically different the group delay responses can be, depending on the smoothing aperture settings. Always specify the smoothing aperture when making a group delay measurement.

Figure 28. Group Delay as a Function of Aperture

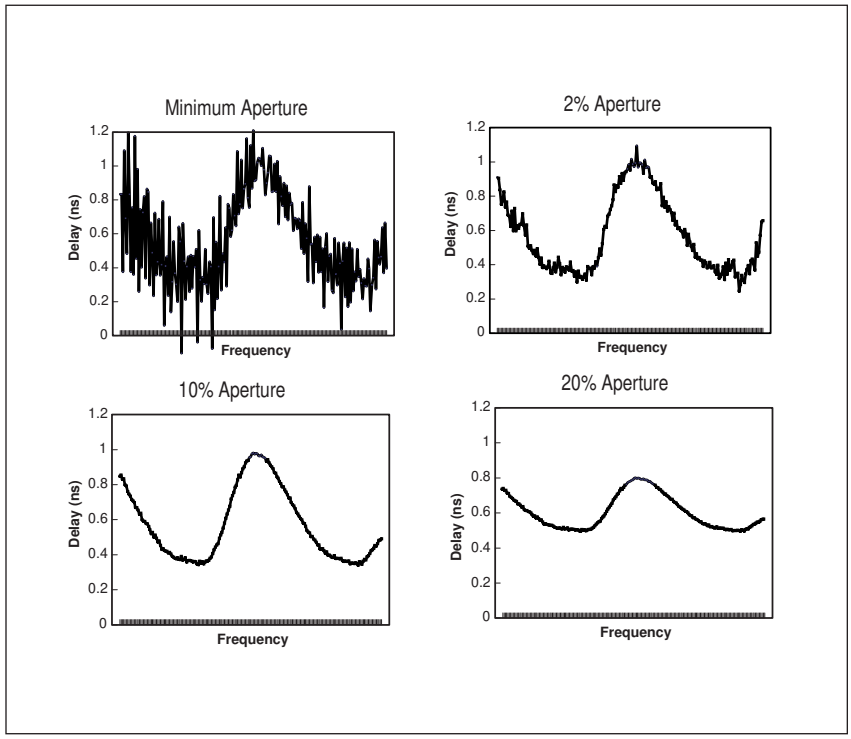

If you do not want to trade off resolution and noise, you can achieve a balance by trading off some measurement speed. Using averaging or narrowing the IF bandwidth results in slower measurement speeds, without degrading resolution or noise.

Absolute Group Delay

If you are interested in absolute group-delay measurements a calibration mixer is required. When measuring the group delay of a linear device, standard vector error correction calls for a through connection (delay=0) to be used as a calibration standard. The solution to the problem of measuring the delay of a nonlinear device like a mixer is to use a calibration mixer with very small group delay as the calibration standard. Two mixers have been characterized by Hewlett-Packard Company for this purpose:

Mixer	Frequency Range	Group Delay
ANZAC MDC-123	30 MHz to 3,000 MHz	0.5 ns
MCL ZFM-4	dc to 1,250 MHz	0.6 ns

The group delay values were obtained by measuring three samples of each mixer, using the upconversion/downconversion configuration shown in Figure 5. The measured group delay was very consistent, with flat frequency response. For example, a pair of MDC-123 mixers was measured, resulting in 1 ns of group delay. A single mixer, then, must have a group delay between 0 and 1 ns. Therefore, one can state that the group delay of the MDC-123 is 0.5 ns, with an accuracy of ± 0.5 ns. This is a very conservative uncertainty window. Therefore, the uncertainties of both mixers are equal to their respective group delay, although these are worse-case estimates. After the through calibration and you are ready to test the frequency-translating DUT, enter a value of electrical delay to compensate for the group delay of the calibration mixer (–0.5 ns for the MDC-123 or –0.6 ns for the ZFM-4). The resulting accuracy derived from this technique is typically the group-delay uncertainty of the calibration mixer.

An important consideration to remember when selecting a calibration mixer is that the delay of the device should be as small as possible. The convention is to select a mixer with very wide bandwidth compared to the mixer to be tested — the wider the bandwidth, the smaller the resulting delay. For further information regarding the desirable characteristics of a calibration mixer, see the Appendix section, *Calibration Mixer Attributes*.

Another technique for measuring absolute group delay uses an upconversion/downconversion configuration that yields more accurate results. The technique is discussed in the section, *Absolute Group Delay — A More Accurate, Lower Ripple Technique.*

AM Delay

Measuring the group delay of converters and tuners with inaccessible internal LOs is very difficult using the method described above because we lack the necessary phase-coherent LO for phase locking. Fortunately, an alternate method exists that is based on modulation delay. This technique can measure group delay on devices without needing a reference mixer. Using a frequency-response normalization, absolute and relative group delay can be measured.

As shown in Figure 29, the modulation-delay method for measuring group delay is accomplished by amplitude modulating or frequency modulating an RF carrier with a low-frequency sinusoid. Then the carrier is swept through the frequency-translating device, the IF output is demodulated, and finally, the phase of the demodulated signal is compared with the original baseband modulation tone (which can be derived by demodulating the carrier at the input to the DUT). As the carrier is swept through the DUT, the phase of the modulation varies proportionately to the phase response of the device itself. Group delay is calculated as follows:

$$Gd = -\theta_{e^\circ} \div (360 * f_{mod})$$

where θ_{e° is the phase difference between the demodulated input and output carriers in degrees, and fmod is the modulation frequency. The aperture of this measurement is equal to twice the modulation frequency. The effects of aperture are the same as the phase-derivative method of measuring group delay previously discussed. As the aperture gets larger, the measurement becomes less noisy, but resolution degrades.

Figure 29. Modulation Delay Method for Measuring Group Delay

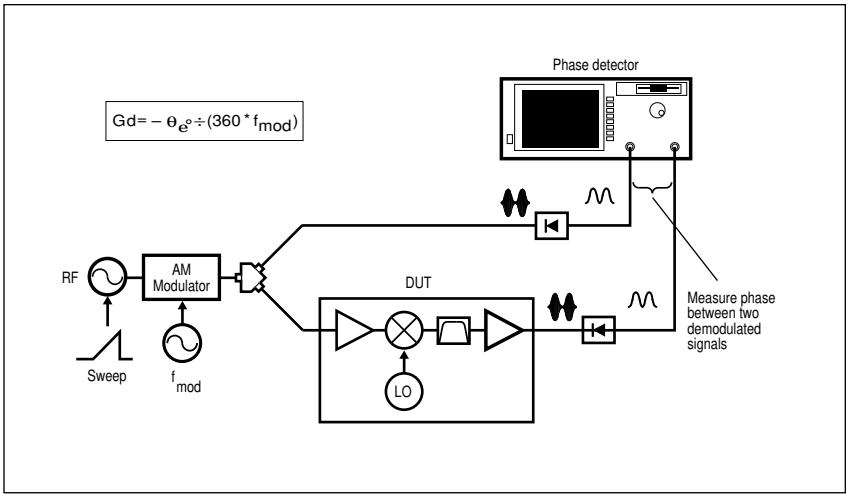

AM-delay measurements are easily performed with the HP 8711C series of network analyzers (see Figure 30). A response normalization calibration is performed without the DUT connected. Then the DUT is connected for relative or absolute group-delay measurement. The aperture of this measurement is fixed at 27.8 kHz, with typical accuracy around ± 10 to 20 ns. The accuracy of this technique is limited by the diode detectors, which has less sensitivity than the narrowband detectors used in the HP 8753E or HP 8720D. Group-delay accuracy with the HP 8753E or HP 8720D is more accurate, typically around the ps range, depending on the smoothing aperture settings. As shown in Figure 30, the phase-derived method (top response) is less noisy than the AM delay method (bottom response). However, vector network analyzers use a phase-derived method of group delay measurement, making it difficult to measure group delay of FTDs with internal inaccessible LOs.

Figure 30. AM Delay Measurements using the HP 8711 Series

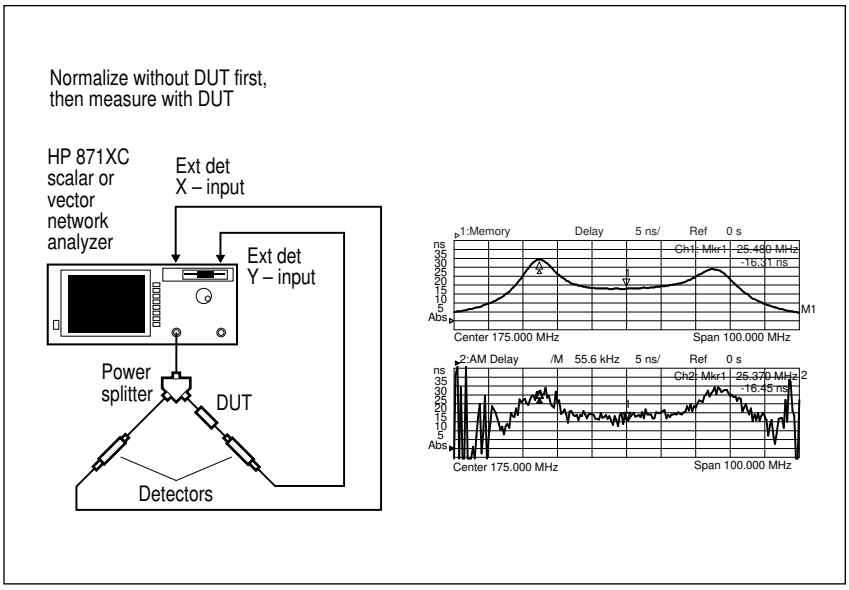

Reflection Measurements

Now that transmission measurements have been covered, let's move on to reflection measurements. Reflection measurements are linear, even when testing frequency-translating devices since the reflected signal does not undergo a frequency shift. Therefore, these measurements are essentially the same as for filters and amplifiers, with a few minor variations. The systematic errors in the test system and the calibration techniques used to remove them are the same. Narrowband detection should be used if available.

Mixers are three-port devices, and the reflection from any one port depends on the conditions of the other two ports. When measuring reflection on a three-port device, it is important to terminate the ports that are not being tested with an impedance typical of actual operation. While this is often the characteristic impedance Z_0 (usually 50 or 75 ohms), it could also be more complex. For example, if the IF port of the mixer is directly connected to a filter, then this filter should be used when testing RF- or LO-port reflection. In this case, it might be necessary to disconnect the IF port of the mixer from the test set and connect the appropriate load impedance.

When testing the RF or IF ports, the LO signal should be applied at the power level that will be used in actual operation. Since the bias point and impedance of the mixer diodes is a function of LO level, the reflection at the other ports will also be a function of LO level.

Figure 31 shows the different RF-port VSWR results obtained with a broadband load versus the IF termination that would be used in actual operation. The lower trace was measured with the IF port terminated with a 50-ohm load. The upper trace was terminated with a filter and then a 50-ohm load. The effect of mismatch between the mixer and filter is readily apparent. Usually, the mismatch is even worse in the stopband where the match is typically quite poor. This is a very common operating environment for a mixer. This measurement was done using narrowband detection.

Figure 31. Reflection Measurement

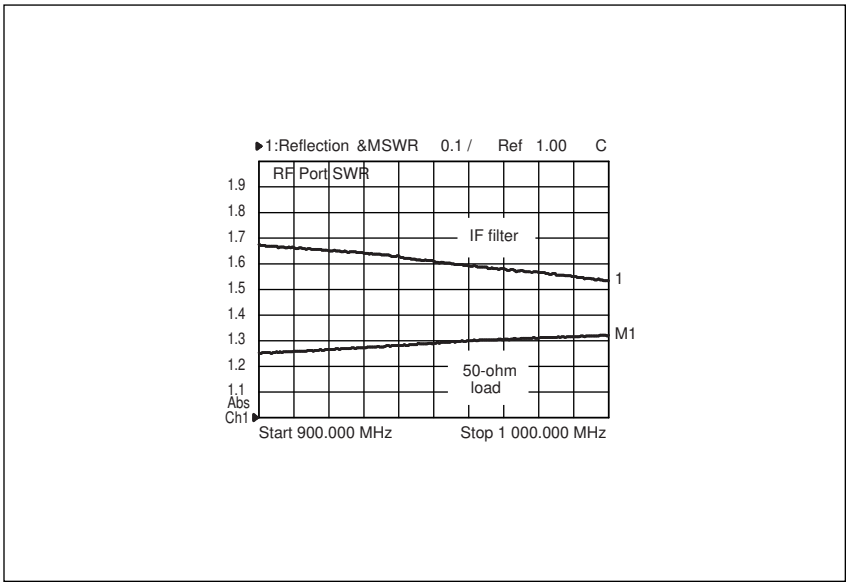

The measurements of VSWR on the LO and IF ports are very similar. For IF-port SWR, the RF port should be terminated with a matched impedance and the LO signal should be applied at its normal operating level. For the LO port VSWR, the RF and IF ports should both be terminated in conditions similar to what will be present during normal operation.

Testing converters and tuners is easier since there are only two ports and the LO will already be at the correct power level. The same requirement for proper termination of either the RF or IF port also applies.

Isolation Measurements

Isolation is a measure of the leakage or feedthrough from one port to another. The more isolation a mixer provides, the lower the feedthrough will be. Isolation is a transmission measurement since the stimulus is applied at one port and the response is measured at another. However, you are measuring a signal at the same frequency as the stimulus, and not the frequency-shifted signal. As is the case for reflection measurements, isolation/feedthrough is dependent also on the termination and LO power on the ports not being tested.

Three main isolation terms are of interest: RF-to-IF feedthrough, LO-to-IF feedthrough and LO-to-RF feedthrough. The latter term is often important if the mixer is near the front end of the receiver or tuner that is connected to a cable or antenna. In this case, significant LO leakage could cause interference in other frequency bands.

Figure 32. Isolation

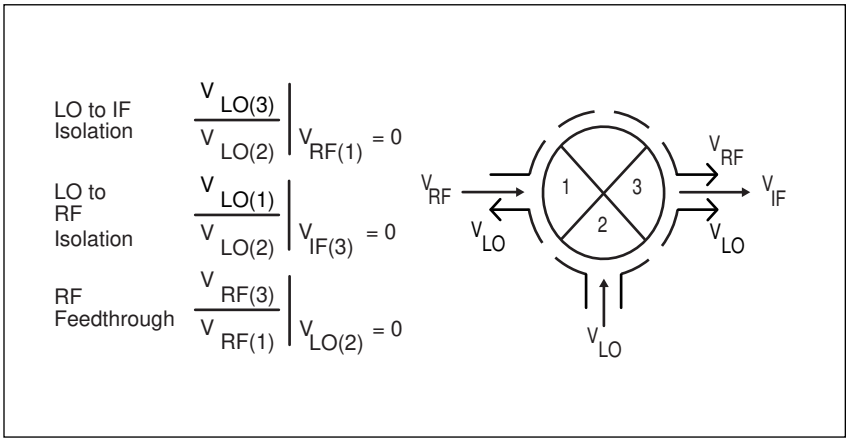

Both the LO isolation terms are small for single- and double-balanced mixers. RF to IF feedthrough is also low in double-balanced mixers. RF feedthrough is usually less of a problem than LO to IF feedthrough because in most cases, the LO power level is significantly higher than the RF power level.

RF-to-IF feedthrough is measured with the same instruments and setup used to measure conversion loss (except frequency-offset mode is not needed when using a vector network analyzer such as the HP 8753E). Because the source and receiver frequencies are the same, set up the network analyzer to use narrowband detection to make the measurement. The only difference in the hardware configuration is that the IF filter needs to be removed so the RF feedthrough will not be filtered out. Depending on which network analyzer is used, a frequency-response calibration or full two-port calibration should be performed to improve measurement accuracy.

The RF feedthrough level is very dependent on the level of applied LO signal. For this reason, the measurement should be made with the LO signal present at its normal operating level.

LO feedthrough measurements are made the same way as described above. Remember to terminate the unused port with the proper impedance. The LO power level used for the measurement should be the same level that is used during actual operation of the mixer.

Figure 33.
RF Feedthrough

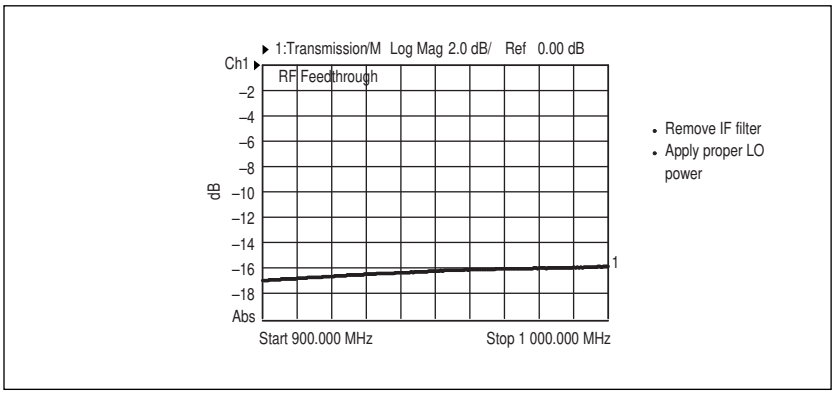

Feedthrough Measurement of Converters and Tuners

The procedure for measuring RF to IF feedthrough of a converter or tuner is identical to that of a mixer. Since an IF filter is often included in the DUT, the RF leakage is often very small. An instrument with high dynamic range should be used to make the measurement, and averaging and a reduced IF bandwidth can also be required to lower the noise floor of the test instrument.

Measuring LO leakage requires a different technique and test instrument. Since the LO port is typically inaccessible, a normal network-analyzer transmission measurement cannot be used. The best instrument to use for measuring LO leakage is a spectrum analyzer. The spectrum analyzer is connected to either the RF or IF port and tuned to the frequency of the LO signal. Again, the unused port should be terminated. If the LO frequency of the converter or tuner is known to within a few kHz, then the tuned-receiver mode of a network analyzer such as the HP 8753E could also be used to make this measurement.

The plot in Figure 34 shows a fairly high level of LO leakage present at the output of a converter. If a scalar network analyzer were used to measure conversion gain of this device, this signal could cause some measurement inaccuracy because the analyzer's broadband detectors would include the LO as well as the desired IF signal. In cases such as this, additional filtering should be added to reduce the level of the LO feedthrough when measuring conversion gain.

Figure 34. Feedthrough of Tuners and Converters

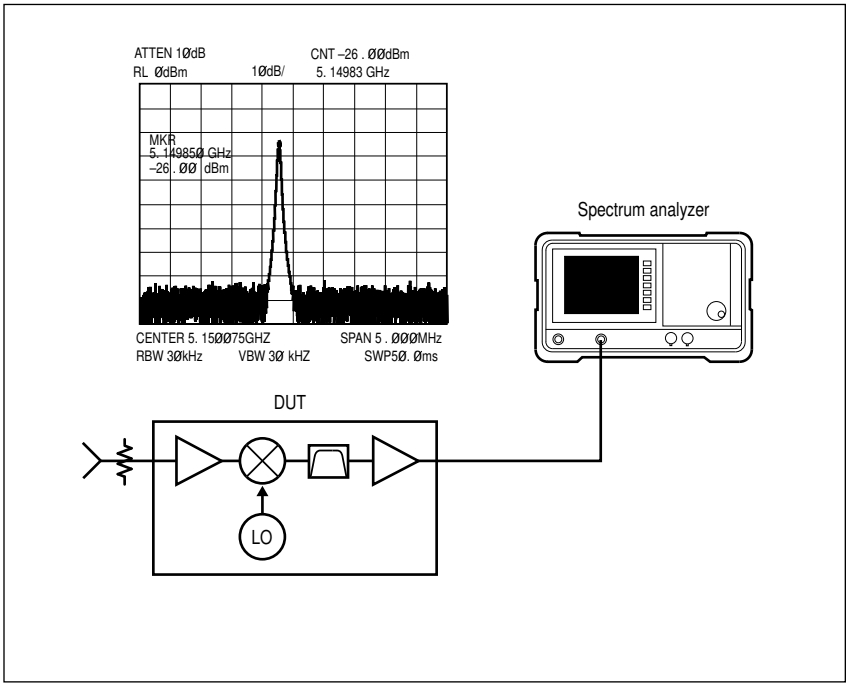

Up to this point, the possible test equipment configurations have been discussed, along with linear measurements such as conversion loss, relative phase, reflection, and isolation. One configuration that has not been thoroughly discussed is the upconversion/ downconversion configuration. This configuration is useful for testing FTDs on vector network analyzers that do not have a frequency offset feature. Furthermore, this configuration along with external error-term manipulation via an external computer can yield very accurate, lower ripple magnitude and phase measurements.

Absolute Group Delay — A More Accurate, Lower Ripple Technique

Although this section describes a more accurate technique for measuring absolute group delay, the same principles can be applied for making more accurate, lower ripple phase-related measurements such as relative phase and relative group delay, as well as very accurate conversion loss measurements.

This section provides more advanced techniques and the operator should understand network-analyzer data transfer and error-term manipulation. An external computer is required. Unlike the previous technique for absolute group delay (in which the DUT was measured against a single, absolute group-delay value representation of a golden mixer calibration standard), the accuracy of this technique depends on first fully characterizing the calibration mixer standard and then using vector error correction to calibrate the test system.

This technique uses an upconversion/downconversion configuration. It consists of a two-step process.

First, three mixer calibration standards are characterized. Mixer pairs are measured, in which one mixer is used as an upconverter and the other as a downconverter. This ensures the same frequency at the network analyzer's source and receiver ports. The data file of each individual mixer is mathematically extracted from the measured mixer-pair data. The individual mixer data file is stored in the computer for later use in the calibration stage.

Second, one of these calibration mixers is used to calibrate the test system. During the calibration, the calibration mixer is the through standard. Since the calibration mixer has been fully characterized, its effects can be removed.

The effects of the through standard are removed by modifying error-terms extracted from the network analyzer. The calibration mixer data files along with additional measured data are used to modify the extracted error-terms. These modified error terms are imported back into the network analyzer where the calibration calculations are performed. Therefore, the network analyzer perform all the error-correction calculations, but the external computer is used to modify the error terms.

Three different levels of error correction can be achieved depending on how much accuracy is needed. The first level removes frequency-response error, the second level removes frequency response and source mismatch, and the third level removes frequency response, source mismatch, and receiver mismatch. The complexity and the steps required increase for each level of accuracy. Each will be discussed in detail.

Let's begin with a discussion of the first step.

Characterizing Mixer Calibration Standards

When making FTD measurements the measurement accuracy of a network analyzer depends upon knowing and correcting for the reference (or calibration mixer standard) used during the calibration process. The calibration mixer, along with additional standards, is used to correct for errors within the test system. The calibration mixer also provides the necessary frequency translation required during the system calibration process. In order to use the calibration mixer as a standard, it must have certain attributes. See *Appendix A* for a list of attributes required in the calibration mixer.

There is no direct way to measure the absolute group-delay characteristics of a mixer. Instead, by measuring three similar mixers in pairs, the simple mathematical technique for solving three equations with three unknowns can be applied. This approach has been used by Hewlett-Packard for many years for characterizing the phase noise of unknown oscillators. This technique can be used to extract the absolute response of each mixer, thus providing the response information needed when the mixer is used as a calibration standard. While the math is basic, the actual measurement process is not. Making vector network analyzer measurements often requires correction of errors within the measurement system. This technique is further complicated by the frequency-translation process that is occurring. With proper measurement techniques and an understanding of the causes of measurement error, the calibration mixer can be accurately characterized and used as a standard.

The characterization process consists of measuring two mixers, an upconverter and a downconverter in order to obtain the same RF input and output frequency at the network analyzer's test ports. The vector network analyzer supplies and measures these RF signals. A common LO source is shared between the two mixers. A typical measurement configuration of a two-mixer pair and an IF filter is shown in Figure 35.

Figure 35. Typical Configuration for a Mixer Pair

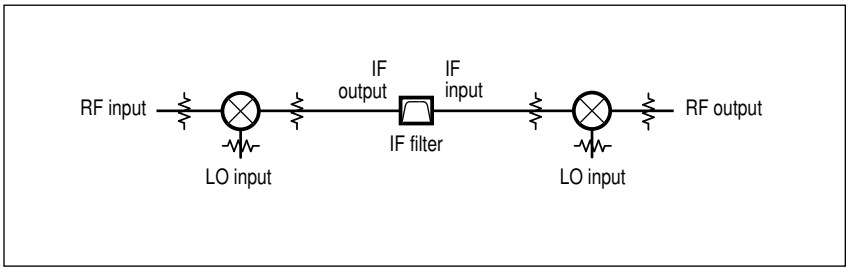

Two key components are required when making upconverter and downconverter measurements on the mixer pairs:

IF filter: The function of the IF filter is to separate the desired mixing product from the undesired product.

Attenuators: These are used to insure well-matched ports on the individual mixers and the test system. Using sufficient attenuation and vector error correction during the characterization process will reduce these effects. You should avoid excessive attenuation since this may introduce unwanted noise in the measurement system, and possibly making the errors larger than a system with less attenuation. The value of attenuation to use will depend on your selected configuration. To review the effects of attenuation, please refer back to the *Magnitude Measurements* section. Another approach would be to replace the attenuation with an isolator between the first mixer and the filter. The isolator may be a good way to reduce mismatch effects while maintaining a low insertion-loss measurement path in the system.

Labeling Conventions

For convenience, each of the three calibration mixers will be labeled A, B, and C. Each mixer is a mixer assembly. For example, mixer A is an assembly consisting of a mixer and three attenuators, one connected to each port of the mixer. The RF port of the mixer A will be referred to as A_{RF}, the IF port as A_{IF}, and the A_{LO} port as ALO. The S-parameter for a reflected signal from the RF port will be referred to as S11A_{RF}. All measured S-parameters will consist of a complex number with real and imaginary values. The measurement group delay of mixer A will be represented by GD_A. The group delay is specified by GD_A with a value in the units of time. To simplify the equations throughout this paper, refer to Figure 36 as a guide.

Figure 36. Diagram of the Mixer Assembly

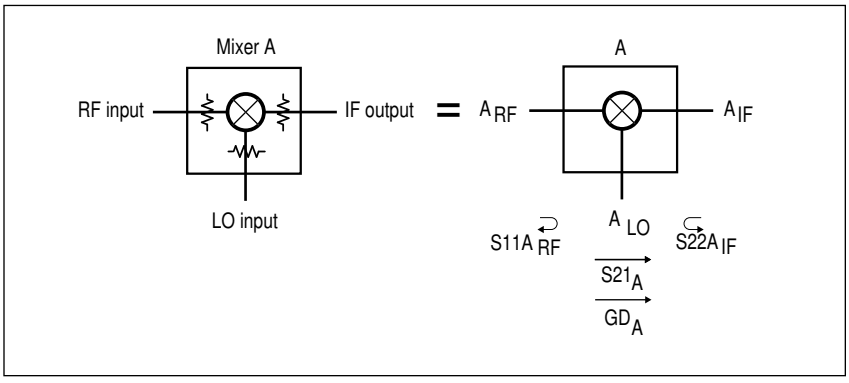

The symbol F will refer to all the components, connected between the two mixers, such as the isolator, IF filter and any adapters. Port 1 of F is the input to the isolator, so a $S11_F$ measurement refers to the S-parameter of the reflected signal at the isolator's port. Refer to Figure 37 for a diagram of the filter assembly and equivalent schematic.

Figure 37. Diagram of the Filter Assembly

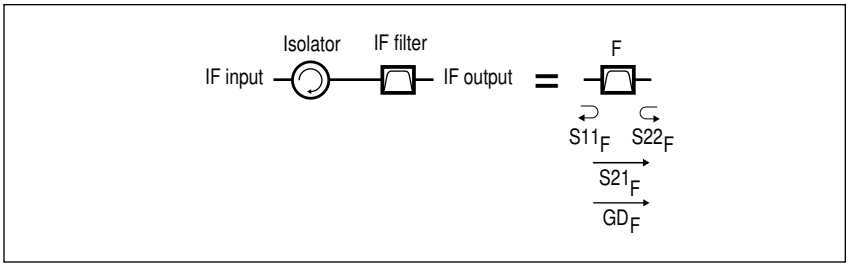

To characterize each mixer-pair, the test configuration is as shown in Figure 38. A good measurement practice is to maintain short distances between the components and the VNA. Shorter cable lengths result in less ripple effects. If possible, connect test components directly to port 2 of the VNA and use a cable from port 1 to complete the measurement path (see Figure 38). This configuration will minimize ripple in S21 measurements caused by the receiver mismatch of the analyzer.

Figure 38. Diagram of the Suggested Component Connections

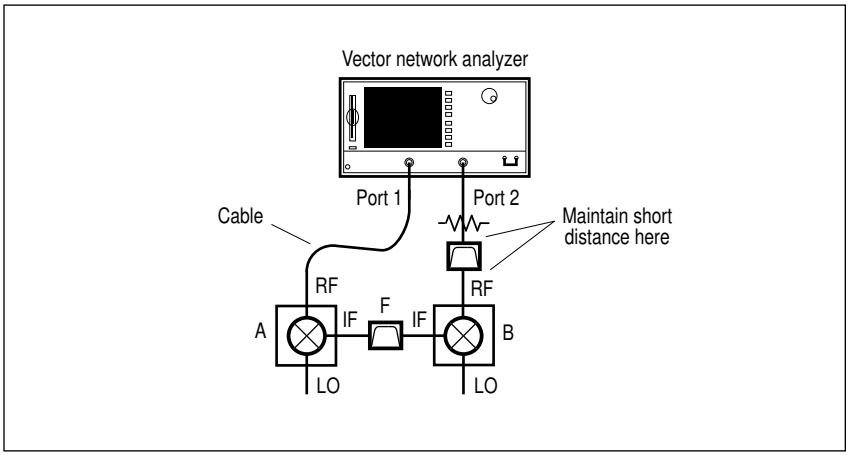

Measurement Assumptions

Prior to mixer characterization, several measurements need to be performed to verify a few basic assumptions and understand the factors that could influence the accuracy of the measurements.

Upconversion = Downconversion

When measuring the mixer pairs, one mixer will be used as both an upconverter and a downconverter. It is assumed that this mixer has the same characteristics in both modes of operation or $A = A^*$, where A is the transmission response in the upconverter mode and A^* is the response in the downconverter mode. A test can be performed to verify this assumption as a first order approximation. Since there is no direct technique for measuring absolute phase of a mixer, this measurement can only be made for the conversion loss of A or $|A|$. Measurements can be made on individual mixers using a scalar network analyzer or a VNA that is capable of performing frequency-offset measurements, such as the HP 8720D Option 089 and HP 8753E. The conversion loss of the mixers should be measured in both the upconverter and downconverter modes of operation. If the assumption that $|A| = |A^*|$ is true, then the characterization procedure can proceed. If the equality does not hold, then the magnitude information gathered here should be used for the magnitude part of the calibration mixer's characterization data *(See Absolute Group Delay and Conversion Loss Calculations)*.

Proper Filtering

Depending on the level of filtering and isolation provided in the measurement system, some spurious signals may be measured by the network analyzer. It is beneficial to make an initial test on the VNA to verify the effects of "spurs" in the measured response. Performing measurements on a pair of mixers over the required RF and LO frequency ranges (using the connections shown in Figure 37) is required to determined if additional filtering or isolation is needed in the test system. This measurement will also be used to optimize the VNA settings for IF BW and IF averaging.

LO Effects

If measurements at different LO frequencies are required, it is necessary to verify the frequency response of the system components across the LO range. It is assumed that the LO drive level to the mixer is constant as the LO frequency is stepped through its specified range. If the LO drive level changes sufficiently to alter the mixer performance then adjustments may be required to minimize these effects. Mismatch effects may also change the LO drive to the mixers, therefore the addition of padding and isolation might be required to maintain the accuracy of the measurements. The LO source might also require amplification to sufficiently drive the two mixers.

Test Procedures for Characterizing the Calibration Mixers

The following measurements can be performed using the VNA in manual operation. Some of the repetitive measurements may be easily automated by a computer program such as HP VEE.
In general, a computer will be required to retrieve measured data and error terms from the network analyzer. The computer will also be used to archive results to a disk for post-processing.

Measurement of the Filter Assembly

It will be necessary to characterize the filter assembly, *F*, by measuring all four S-parameters. This information is used later when extracting the frequency response of the individual mixers. To characterize the filter assembly, use a standard full two-port calibration at the IF frequencies. This test data should also contain the group-delay data for this assembly. Store all measured data to a computer file for post-processing.

Measurement of Mixer Pairs

Measurements are now made on the set of mixer pairs. If the mixers are well matched, we can consider the transmission response, S21, of each mixer to be independent of the other, as well as independent of the IF filter's response. In this way, we can describe the overall S21 as the product of the two mixers and the filter:

If A = $S21_A$ of Mixer A, B = $S21_B$, and C = $S21_C$; F represents the measured $S21_F$ of the filter, and X, Y and Z represent the measured S21 of mixer pairs, AB, CB, and CA*, respectively, then the response of each can be expressed as

$X = A \bullet F \bullet B$; $Y = C \bullet F \bullet B$; *and* $Z = C \bullet F \bullet A^*$

where A^* is the response of Mixer A in the downconverter position. This assumes the LO frequency and filtering is set to provide upconversion at the first mixer position at port 1 of the VNA. The system can also be configured to operate with downconversion in the first mixer position. Figure 39 shows the configuration for measurements made on X.

Figure 39. Representation of a Mixer Pair

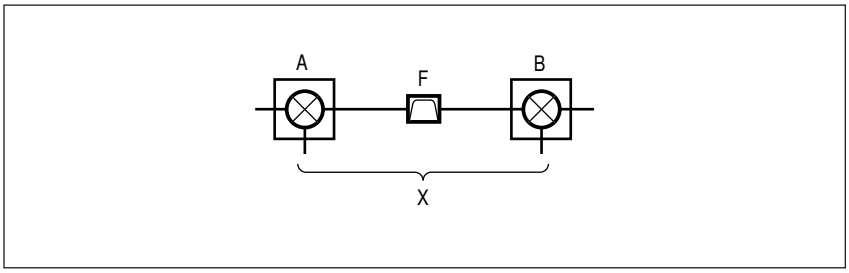

In order to measure the mixer pairs, a standard full two-port calibration is performed over the RF frequency range. Figure 40 shows the configuration for the VNA calibration. Since the mixers are configured in an upconversion and downconversion pair, the VNA supplies and measures the same RF frequency at both ports. An RF bandpass filter is included in the calibration and is used later to filter out any spurious signals, such as LO leakage, which might enter the measurement port of the VNA.

Figure 40. Typical Configuration for Calibrating the Test System

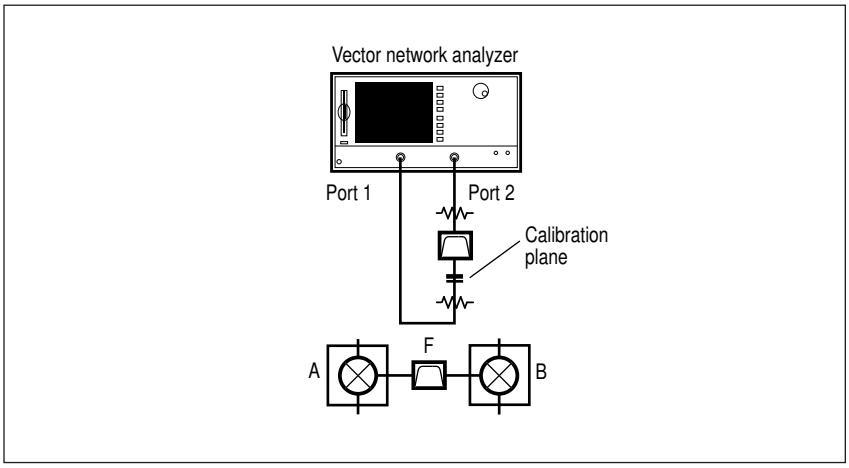

During the calibration and measurement, it is best to use the step sweep mode. This sweep mode verifies phase lock at each measurement point and yields the highest accuracy. If the mixer pair is a noninsertable device, you should calibrate the VNA with the “swap-equal-adapter” technique. Please refer to the VNA user guide for the details of this calibration procedure.

Required Mixer-Pair Data Files

Once the test system is calibrated, each set of mixer pairs is measured, as shown in Figure 41, using the full two-port calibration. A set of measurements will be recorded for each mixer pair X, Y and Z. The measured transmission response of each set is saved to a file for data processing. As a minimum, the data files should contain the group delay and S21 (both magnitude and phase) for each set of measurements. As discussed earlier, care should be taken in selecting the appropriate group-delay aperture (please refer to the *Group Delay* section for more information). In some cases, a wider aperture may be required in order to smooth out spurious responses caused by improper IF and RF filtering in the test system. Also, adjusting the IF BW and IF averaging can aid in reducing the spurious signals and noise present in the measured data.

Figure 41. Typical Configuration for Measuring the Mixer-Pairs

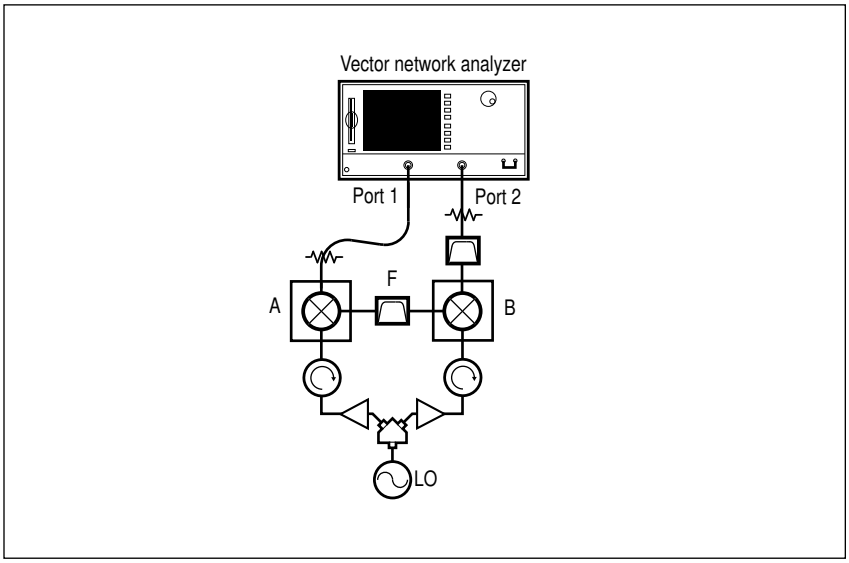

Optional Mixer-Pair Data Files

Saving input and output match information of the individual mixers is beneficial if further error correction is required. Input and output match of the individual mixers can be measured using the techniques described in the previous *Reflection Measurement* Section.

An improved transmission response of the mixer pairs may be necessary. It is anticipated that some degree of measurement error will occur due to mismatch effects between the mixers and IF components. If the mismatch effects in the IF section introduce excessive ripples in the calculated transmission response, additional padding may reduce this mismatch.

Another technique to mitigate mismatch effects in the IF section is to apply additional error correction to the transmission response. Improving the transmission response is accomplished by measuring the match of all the IF ports, for example $S22A_{IF}$, $S11B_{IF}$, S11F and S22F, and then applying the following equation to the forward transmission tracking error term, E_{TF} , of the two-port error correction.

$$E_{TF}^{NEW} = E_{TF}^{OLD} \times \left[1 - S22A_{IF} \times S11F \right] \times \left[1 - S11B_{IF} \times S22F \right]$$

(S11F and S22F should have already been measured during the characterization of the F assembly. $S22A_{IF}$ and $S11B_{IF}$, of mixer A and mixer B respectively, can be measured with a 1-port calibration over the IF range, using the techniques described in the previous *Reflection* section of this paper.)

The tracking error term can be extracted from the analyzer, via a computer running HP VEE, adjusted and inserted back into the memory of the VNA. All subsequent measurements of forward transmission on that mixer pair will be corrected for mismatch effects due to the IF components. Notice that adjustments of the forward transmission tracking error term must be performed for each mixer pair used. For example, when mixer C is used in the first position, the term $S22A_{IF}$ is replaced by $S22C_{IF}$.

Once each set of mixer pairs has been measured, now calculate the absolute group delay and conversion loss of the individual mixers. The stored data files should contain the values of group delay, GD, for mixer-pairs X, Y, Z and the filter assembly F. The files should also contain the transmission response, namely $S21_X$, $S21_Y$, $S21_Z$ and $S21_F$. If different LO frequency settings are required, a different set of measurements will be required for each LO setting.

Mathematics to Extract Individual Mixer Data

The measured data will now be processed in order to extract the absolute group delay and transmission response of each individual mixer. Once this information is obtained, each mixer can then be used as a calibration standard for measuring the absolute group delay of a device under test.

Assumptions

It is assumed that there is enough padding between the components to minimize the ripple effects caused by mismatch. If large ripples are seen in the magnitude and group delay data over frequency, it may be necessary to introduce additional error correction, as discussed previously. It is also assumed that $A = A^*$. This condition was partially verified for magnitude in the preliminary measurements. The measured data will now be processed in order to extract the S-parameters and group delay of each individual mixer. As a check for the accuracy in the calculations, the magnitude of the calculated S21 for each mixer can be compared to the values measured using the frequency offset mode on the VNA. The two techniques should yield similar results for the conversion loss of the three individual mixers.

Absolute Group Delay and Conversion Loss Calculations

The absolute group delay of each mixer is calculated as follows, where GD_A is the absolute group delay of mixer A in the units of time.

$$GD_A = \frac{GD_X - GD_Y + GD_Z - GD_F}{2}$$

$$GD_B = \frac{GD_X + GD_Y - GD_Z - GD_F}{2}$$

$$GD_C = \frac{-GD_X + GD_Y + GD_Z - GD_F}{2}$$

The conversion loss of each mixer is calculated from the following expressions. The calculations are performed using complex numbers for all the S21 values.

$$S21_A = \sqrt{\frac{S21_X \cdot S21_Z}{S21_F \cdot S21_Y}}$$

$$S21_B = \sqrt{\frac{S21_X \cdot S21_Y}{S21_F \cdot S21_Z}}$$

$$S21_C = \sqrt{\frac{S21_Y \cdot S21_Z}{S21_F \cdot S21_X}}$$

However, if the assumption that A = A* is not true, then measure A and A* directly with a scalar network analyzer or vector network analyzer in frequency offset mode.

Record the group delay and magnitude of S21 for each mixer. Each mixer's final data file should now contain the frequency response for |S21| and group delay over the specified LO setting(s). It is anticipated that the phase information of the calibration mixer will be reconstructed from the group delay data. Now that the calibration standard has been characterized, it is possible to calibrate the VNA and measure absolute group delay and conversion loss of the frequency translation device under test.

Calibrating the Test System with the Calibration Mixer

Calibration Configuration

When making accurate measurements using a VNA, the analyzer must be calibrated to remove the effects of systematic errors from within the test system. In a traditional VNA calibration, a series of known standards is connected at the test ports and measured. Next, a set of error terms is created, based on the measurements and knowledge about the standards. These error terms are used to correct subsequent measurements from errors contained within the test system.

To provide absolute measurements of frequency-translation devices, such as mixers, upconverters and downconverters, it becomes necessary to calibrate the system with a known device that can also translate the frequency during the test system calibration. A calibration mixer is used to calibrate the system after its absolute S-parameters are known. The systematic error terms can then be calculated based on measurements and knowledge of the standard(s) used.

A typical configuration of the test system, which includes the hardware interface chassis, is shown in Figure 42. The calibration mixer standard is connected between test ports 1 and 2 during the calibration stage. Once the system has been calibrated, and the effects of the calibration mixer accounted for, a DUT can be inserted between the test ports and measured. As a calibration verification check, the calibration mixer can be measured and compared to its stored data files. If the two sets of data files are not equal, then the test system has not been properly calibrated.

Figure 42. Typical Configuration of Test System

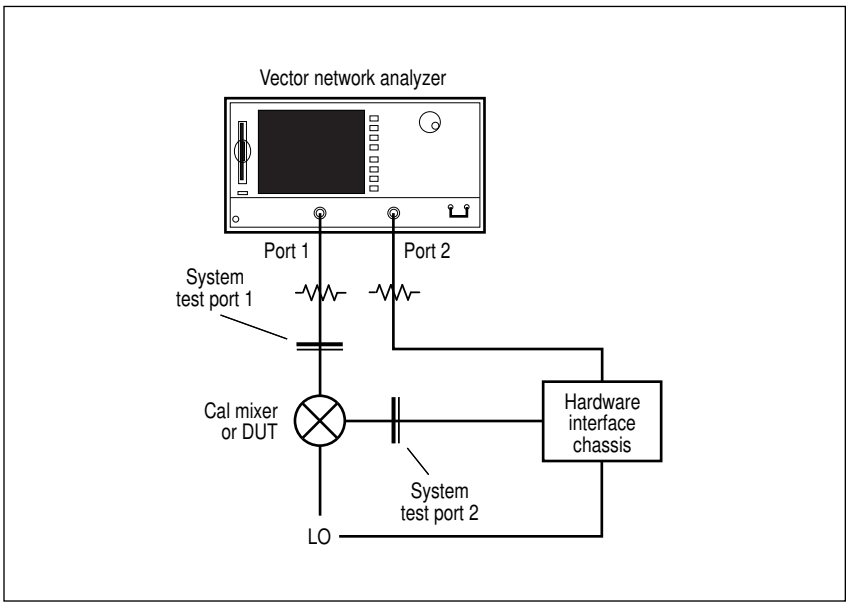

All connections to the test system will be performed at the system test port 1 and 2 as labeled in Figure 42. A coaxial calibration kit will be required when performing reflection calibrations of the test system at the system test port 1. If the calibration mixer or DUT is “noninsertable” into the test system at the system test ports 1 and 2, then use the swap-equal-adapter technique to compensate for the test-port connections.

The hardware interface chassis contains the necessary filtering, padding and frequency translation required by the test system and the DUT. The chassis is to remain connected to the VNA for the

duration of the calibration and test unless otherwise stated. If the chassis is disconnected from the test system after calibration is performed, a new calibration would then be required. Notice that since the chassis contains a mixer for frequency translation, this mixer requires a phase-locked LO, similar to the one provided to the calibration mixer or DUT. A signal generator set to the appropriate LO frequency can provide theses two signals. If the DUT contains an internal LO, then a portion of this signal can be supplied to the calibration mixer and hardware interface chassis during the calibration and test.

Calibration Error Terms and Equations

This section introduces you to the pertinent calibration error terms and equations. It serves as an overview. A more detailed, step-by-step procedure for the calibration is presented in the succeeding *Test Procedure for Calibrating the Test System section.*

The first step to measuring a DUT requires calibrating the test system using the calibration mixer standard. During the calibration, the S21 of the calibration mixer and test system is measured as a two-port device that yields the following equation.

$$S21_{MXR}^{M} = \left[\frac{1}{1 - S11_{MXR}^{A} \times E_{SF}}\right] \times S21_{MXR}^{A} \times \left[\frac{1}{1 - S22_{MXR}^{A} \times E_{LF}}\right] \times E_{TF}$$

As shown, the measured transmission response, $S21_{MXR}^{M}$, is a function of the actual S21 of the mixer, $S21_{MXR}^{A}$, and several error terms. Only the errors terms associated with the forward direction are considered because the hardware interface chassis prevents measurements to be made in the reverse direction, at the system test port 2.

$S21_{MXR}^{A}$ is the actual S21 of the mixer. This information should be contained in the stored data files of the calibration mixer or it can be measured.

E_{SF}, is the source match at the system test port 1. It can be determined using a standard one-port calibration techniques over the RF frequency range.

E_{LF} is the input match of the hardware interface chassis, $S11_{CH}^{A}$, which is the system test port 2. The $S11_{CH}^{A}$ can be measured directly by measuring the return loss of this port after the VNA is calibrated over the IF range using a standard one-port coaxial calibration.

$S11_{MXR}^{A}$ and $S22_{MXR}^{A}$ are the actual input and output match of the calibration mixer. These are measured at the RF and IF frequencies, respectively. This information should be contained in the stored data files of the calibration mixer or it can be measured.

Using the test system's error terms and the characterization data file of the calibration mixer, the forward tracking error term, E_{TF}, of the system can be obtained.

$$E_{TF} = \frac{S21^{M}_{MXR}}{S21^{A}_{MXR}} \times \left[1 - S11^{A}_{MXR} \times E_{SF}\right] \times \left[1 - S22^{A}_{MXR} \times E_{LF}\right]$$

This adjusted error term, E_{TF} , is later substituted into the VNA when making measurements on the DUT. As shown above, E_{TF} can be corrected for the forward mismatch effects in the system. If the source and receiver mismatch is low then it may not be necessary to correct for all the error terms in the equation. This will be covered in the test-system calibration section to follow.

Now that all the forward error terms of the test system have been obtained, a measurement on a DUT can be performed. The DUT measurement can be represented with a similar equation replacing the calibration mixer terms with the DUT.

$$S21^{M}_{DUT} = \left[\frac{1}{1 - S11^{A}_{DUT} \times E_{SF}}\right] \times S21^{A}_{DUT} \times \left[\frac{1}{1 - S22^{A}_{DUT} \times E_{LF}}\right] \times E_{TF}$$

The actual match of the DUT, namely $S11^{A}_{DUT}$ and $S22^{A}_{DUT}$, can be measured using a standard one-port calibration over the RF and IF frequency ranges, respectively. Using the error terms and the measured value of the DUT, the actual S21 of the DUT can be calculated. As mentioned previously, not all error terms may be required to obtain an accurate estimate of the actual DUT response, $S21^{A}_{DUT}$. If the mismatch of the test system or the DUT is low, then correcting for the source and load match effects may not be necessary. The following equation shows the calculation for $S21^{A}_{DUT}$ including source and load match correction

$$S21^{A}_{DUT} = \frac{S21^{M}_{DUT}}{E_{TF}} \left[1 - S11^{A}_{DUT} \times E_{SF}\right] \times \left[1 - S22^{A}_{DUT} \times E_{LF}\right]$$

It is now time to apply these equations to a system calibration and test. The following procedures outline the steps used to calibrate the system using various levels of error correction. Each level of error correction increases the accuracy in the system calibration by including additional error terms as described above. Once the system is calibrated, the same techniques can be applied to measurements of the DUT.

Test Procedures for Calibrating the Test System

The basic concept for calibration of the test system involves inserting the calibration mixer into the measurement path between the system test ports 1 and 2. A measurement sweep is performed and the calibration error terms are calculated based on the measurement. Because the calibration mixer is removed from the system when performing a measurement on a DUT, the system's calibration error terms are adjusted to remove the contribution from the calibration mixer. The calibration mixer essentially provides the frequency translation required during the calibration of the test system.

There are several levels of error correction that can be performed when calibrating the test system. The simplest error correction technique characterizes the frequency response of the test system and does not include any source and receiver match effects. Here, the calibration mixer is placed in the test system and a S21 measurement is performed on the system and mixer. The measurement is adjusted for the calibration mixer response and the remaining response term is used to normalize subsequent measurements of the DUT. This technique does not remove the mismatch effects between the source and input to the calibration mixer. It also does not remove the effects of the receiver match interaction with the calibration mixer. Depending on the level of mismatch within the system and calibration mixer, an error or ripple in the calibration term might be introduced. This ripple will present itself when performing measurements on the DUT. If the ripple is too large, then additional error correction might be required.

Other levels of error correction include characterizing the source and receiver match effects during the calibration procedure. Taking these mismatches into account during calibration reduces the level of ripple in the DUT measurements. Additional calibration standards and measurements are required in order to characterize and remove these mismatch effects. To accurately characterize the effects from both the source and receiver mismatch, measurements are required at the RF and IF frequency ranges, respectively.

Below are the calibration procedures for the three types of error correction that can be implemented. Each procedure corrects an additional error term to increase the accuracy of the calibration.

First-Order Error Correction During System Calibration: Frequency-Response Term Only

For the first level of error correction, the forward tracking term, E_{TF}, for the system components (network analyzer, hardware interface chassis, cables, etc.) is measured directly. This error term is adjusted for the calibration mixer response and used to normalize DUT measurements. For this level of error correction, there is no adjustment for source and receiver mismatch effects that might introduce ripple in the error term, E_{TF}.

- Place the calibration mixer into the test system at the system test ports 1 and 2 and supply the appropriate LO to the mixer and the hardware chassis. Perform a response through calibration and extract the error term, E_{TF}, from the VNA. Using the data supplied with the calibration mixer, recall the group delay and the magnitude of S21. The S21 phase of the calibration mixer will be reconstructed from the group delay using the expression below.

$$\theta = mod\ 360(-GD \times 360° \times Frequency)$$

- Adjust E_{TF} by removing the contribution of the calibration mixer from the system's through response. Note: a different E_{TF} term should be created for each setting in LO frequency using the appropriate calibration mixer data from the file. Based on the calibration mixer's response, a new forward tracking error term, E_{TF}^{NEW}, will be created using the following calculation.

$$E_{TF}^{NEW} = \frac{E_{TF}}{S21_{MXR}^{A}}$$

- Insert the new tracking term in the VNA's memory. The response calibration has now been adjusted for the calibration mixer. In other words, the actual S21 of the calibration mixer has been removed from the forward tracking error term. The VNA will now apply the appropriate error correction to subsequent measurements.

The system is now ready to measure the frequency translation device under test. The absolute group delay and conversion loss will be displayed on the VNA. As mentioned, this level of error correction does not include mismatch effects from the source and receiver. As a system verification, the calibration mixer should now be measured. Compare the measured group delay and the magnitude of S21 to the data stored on the mixer's data file. The two data sets should be equivalent. Note any ripple in the displayed response. At this point, you should determine if any additional error correction is required to reduce the ripple in the frequency response.

Second-Order Error Correction during System Calibration: Response and Input Match Terms

In addition to the forward tracking error term used in the calibration, correction of errors resulting from mismatch between the source and calibration mixer RF input can be made. These mismatch effects can introduce error and ripple in the forward-transmission tracking term E_{TF}, which is used to normalize measurements of the DUT. By characterizing the source match of the VNA and measuring the input match of the calibration mixer, the forward-tracking term can be adjusted for input mismatch errors. A one-port calibration is used to characterize the input match terms and a response through calibration is used for the forward-tracking term. The one-port calibration yields three more error terms: the forward directivity, E_{DF}, the source match, E_{SF}, and the reflection tracking, E_{RF}. A substitute full two-port calibration will be created but only the above errors terms will be used by the analyzer, the other error terms will be eliminated from the error correction. This allows the VNA to provide the required error correction calculations. The VNA will also display the corrected S11 and S21 of the device tested. Following the procedure below will create all the necessary calibration information required for a second level of error correction.

- Create a full two-port calibration place holder, which will be used to store the modified error terms. This can be accomplished by using a pre-existing full two-port calibration, which covers the desired RF frequency range. If one does not exist, you can emulate a full two-port calibration over the desired RF frequency range. To emulate a calibration, press all analyzer's keys as if you were performing a calibration, but do not connect any calibration standards. Save this instrument state to memory or disk file.

- The calibration configuration is shown in Figure 42. Perform a S11 one-port calibration over the specified RF range at the system test-port 1. Extract the three error terms E_{DF}, E_{SF}, E_{RF} associated with the system test-port 1 using a computer and HP VEE or similar software.

- Using the one-port calibration, measure the input match, $S11^{A}_{MXR}$, to the calibration mixer's RF port. This measurement might have been previously stored during the mixer characterization.

- Perform a response through calibration with the calibration mixer connected between test port 1 and 2. Extract the transmission tracking term, E_{TF}, from the VNA.

- Using the data file associated with the calibration mixer, adjust E_{TF} by the calibration mixer's S21 and input match using the following equation.

$$E^{NEW}_{TF} = \frac{E_{TF}}{S21^{A}_{MXR}} \left[1 - S11^{A}_{MXR} \times E_{SF} \right]$$

- Recall the previously saved two-port calibration. Insert the following terms into the error terms of this two-port calibration.

$$E_{DF},\ E_{SF},\ E_{RF},\ E^{NEW}_{TF}$$
$$E_{LF} = 0$$

The VNA can now be used to measure a DUT. The absolute group delay and conversion loss will be displayed on the VNA. Using this error correction, it is also possible to display the corrected input match, $S11^{A}_{DUT}$, of the DUT. The error correction implemented adjusts for systematic errors in the frequency response and source match of the system. If different LO settings are required, it might be necessary to create a new set of error terms for each LO frequency used. The calibration mixer should be measured to verify system performance. Compare the group delay and the magnitude of S21 to the data stored on the mixer's data file. The two data sets should be equivalent. Note any ripple in the displayed response. You will need to determine if additional error correction is required to further reduce the ripple in the frequency response.

Third-Order Error Correction during System Calibration: Response, Input and Output Match Terms

This level of error correction includes all the above terms for transmission frequency response and source match, but also adds an additional correction for the receiver match of the test system. Only error terms in the forward direction can be implemented in this system. The resulting error terms consist of the frequency response term, E_{TF}, the system test-port 1 terms, E_{DF}, E_{SF}, E_{RF} and the system test-port 2 receiver match term, $S11^{A}{}_{CH}$. The input and output match and the transmission characteristics of the calibration mixer are also required to implement this error correction scheme during system calibration.

- Create a full two-port calibration place holder, which will be used to store the modified error terms. This can be accomplished by using a pre-existing full two-port calibration that covers the desired RF frequency range. If one does not exist, you can emulate a full two-port calibration over the desired RF frequency range. To emulate a calibration, press all the analyzer's keys as if you were performing a calibration, but do not connect any calibration standards. Save this instrument state to memory or disk file.

- The calibration configuration is shown in Figure 42. Perform a S11 one-port calibration over the specified IF range at test port 1. Measure both the match of the hardware interface chassis, $S11^{A}$ CH, and the IF port of the calibration mixer, $S22^{A}{}_{MXR}$. The calibration mixer data file may contain the IF port match of the mixer. Save this data to the computer.

- Perform a S11 one-port calibration over the specified RF range at the system test-port 1. Extract the three error terms E_{DF}, E_{SF}, E_{RF} associated with the system test-port 1 using a computer and HP VEE or similar software.

- Using this one-port calibration, measure the input match, $S11^{A}{}_{MXR}$, to the calibration mixer's RF port. This measurement may have been previously stored during the mixer characterization.

- Perform a response through calibration over the RF range with the calibration mixer connected to the test ports. Extract the forward-tracking term, E_{TF} , from the VNA. Remove the contribution of the calibration mixer from the calibration by adjusting the forward-tracking term by the mixer's transmission response. Also include the effect of the input and output match terms at the RF and IF frequencies, respectively, using the following expression.

$$E_{TF}^{NEW} = \frac{E_{TF}}{S21_{MXR}^{A}} \times \left[1 - S11_{MXR}^{A} \times E_{SF} \right] \times \left[1 - S22_{MXR}^{A} \times S11_{CH}^{A} \right]$$

- Recall the full two-port calibration and insert the following error terms into the VNA's two-port calibration memory. Verify that the correct is used for each setting in LO frequency.

$$E_{DF}, E_{SF}, E_{RF}, E_{TF}^{NEW}$$
$$E_{LF} = 0$$

The VNA can now be used to measure the DUT. The absolute group delay and conversion loss will be displayed on the VNA. It is also possible to display the corrected input match, $S11_{DUT}^{A}$, of the DUT. The error correction implemented adjusts for systematic errors in S21 caused by the frequency response and source match of the system during both calibration and test. It only corrects for receiver match effects during system calibration. To include the effects of receiver match during measurement of the DUT, the output match of the DUT would be required. Using a one-port calibration over the IF range, the output match of the DUT, $S22_{DUT}^{A}$, can be measured. Additional calculations are required to remove the receiver match effects from the actual S21 of the DUT. The match of the hardware interface chassis, $S11_{CH}^{A}$, is also required over the specified IF range. The corrected S21 for the DUT including receiver match effects is shown below.

$$S21_{DUT}^{NEW} = S21_{DUT}^{A} \times \left[1 - S22_{DUT}^{A} \times S11_{CH}^{A} \right]$$

This calculation can easily be performed on the computer. It is possible to change the error terms of the full two-port calibration to include this effect thereby using the VNA to perform all error correction in the instrument.

As previously discussed, the system calibration can be verified by leaving the calibration mixer connected to the test system and performing *S11* and *S21* measurements. After calibration is performed, the calibration mixer characteristics are removed from the calibration terms. At this point the calibration mixer can be measured as a DUT. These measured S-parameters can then be compared to those values saved in the characterization data file provided with the calibration mixer. If the system was calibrated correctly then the two sets of data should be equivalent. Depending on the level of error correction used during system calibration and test, there can be slight differences between the measured results and the stored characteristics.

At any time, if the system calibration needs to be re-verified, then placing the calibration mixer into the test system and measuring its S-parameters will provide the system check. As long as the calibration mixer's measured response agrees with the stored characteristics, then the system calibration is still valid.

Appendix A: Calibration Mixer Attributes

The quality of the response measurement of the calibration mixer depends somewhat on the characteristics of that mixer. These attributes are listed below:

- **Frequency Response:** The calibration mixer should have a broad frequency response for all the ports, RF, IF and LO ports. A low conversion loss for the mixer is not important in this mixer. It is especially important that there are no sharp discontinuities or variations in the frequency response of the calibration mixer, as these can indicate poor match conditions which can cause errors during calibrations. Finally, the mixer response should not be sensitive to the LO level, provided a sufficient LO level is present. A low level mixer may be desirable for calibration so that the LO may be padded with a well-matched attenuator.

- **Return Loss:** The calibration mixer must have good match (low return loss) on the RF and IF ports. The mismatch between these ports and the test instrument is a major source of error in the measurement of the mixer response. In most cases, the mixer should have well matched attenuator pads added to the RF and IF ports as a composite component with good match. The return loss of the LO port is not so important, but if the LO drive is not well matched, the mismatch can cause variations in the LO drive level, which may affect the mixer response.

- **Isolation:** The calibration mixer should have good isolation, so that the RF to IF and LO to IF leakage does not cause “spurs” in the response of the system after calibration. Using proper filtering in the test system will reduce the effect of spurs in the final test system, but the leakage signals may reflect back into the mixer from the LO and output ports of the mixer, re-mix, and cause ripple in the calibration response.

- **Spurious Generation:** The spurious generation of the calibration mixer should be low. Driving the mixer at relatively low levels, and padding the input of the mixer, will help reduce spurious generation. Spurs created in the mixer may cause spurs in the network analyzer measurement response of the calibration mixer.

- **Size:** Surprisingly, the calibration mixer should typically be of a small physical size. A small mixer will have less phase response (and thus lower group delay) so any ripples caused by phase change through the mixer will be less and “smoother,” with peaks farther apart in frequency. This helps in measurements where small gain or phase peak-to-peak variation over a small frequency aperture must be measured.

Appendix B: Tips for Making and Measuring the Calibration Mixer

In practice, the calibration mixer should have a much broader bandwidth than the mixer under test, thus ensuring that any mismatch or conversion loss rolloff effects will “common mode” out of the calibration measurement. Broad bandwidth usually means smooth frequency response. The mixer should be double balanced, or even triple balanced to reduce leakage and image responses. The mixer should be mated with high quality attenuators that have good return loss over the entire range of LO, IF, RF and the sum products. The final calibration mixer may have these pads “permanently” attached (e.g., using shrink tubing over the connectors) so that the pad becomes part of the calibration mixer. As a reminder, the loss of the calibration mixer is not too important. The input and output pads should be at least 6 dB, provided the measuring instruments have sufficient dynamic range at these low signal levels.

The interstage filter should have either isolators, or pads, or both to reduce mismatch and remixed signal effects. This filter/pad/isolator combination should also be kept as a single unit, as its response must be measured over the IF range to determine its loss. The measurement of the filter combination should be done using the best two-port calibration techniques.

The network analyzer should also have padding on its input and output ports, placed at the ends of the test cables. Keeping the lengths between the test-port pads and the calibration mixers short will reduce the rate at which mismatch ripples appear, thus making narrow band differential gain and phase measurements less prone to errors from mismatch. Finally an RF band pass or high pass filter should be added between the analyzer ports and the mixer under test, or better yet, between the analyzer coupled port at the sampler. This will reduce the number and size of any “spikes” in the mixer response caused by out of band signals which might be sampled into the measurement IF of the network analyzer.

Appendix C: Program for Fixed IF Measurements with One External LO Source

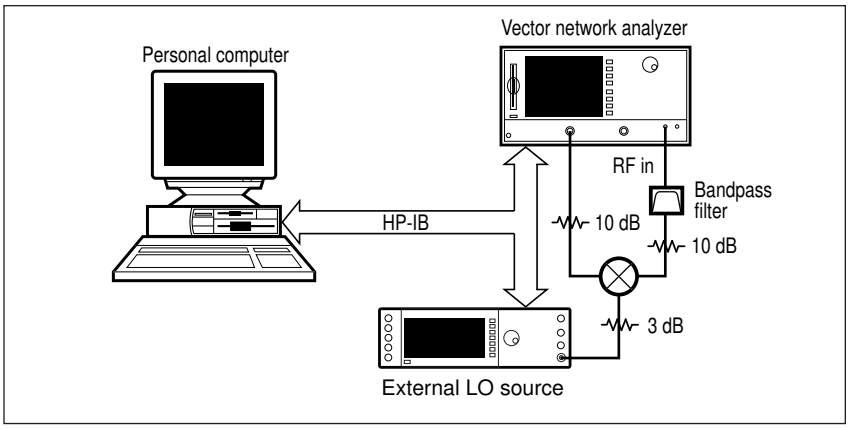

Connection Diagram for Fixed IF Measurements using an External Computer

Example Program Listing for Fixed IF Measurements Using a Single External Source as an LO.

```
1     !  *** Fixed IF Downconverter Measurements using the HP8753E Network Analyzer and ESG-D3000A
Signal Generator ****10    ! RE-SAVE "FIXED_IF"
20    PRINTER IS CRT
30    DIM Marker(51)       ! Create an array to hold the conversion loss values
40    ASSIGN @Ana TO 708   ! 8753E Vector Network Analyzer Address is 708
50    ASSIGN @Lo TO 719    ! ESG-D3000A Signal Generator Address is 719
60    OUTPUT @Ana;"Pres"   ! Instrument Preset
70    OUTPUT @Lo;"*RST"    ! Instrument Preset using the SCPI command
80    OUTPUT @Ana;"FORM4"  ! 8753E Data Transfer Format, ASCII with no header
90     !
100   !   Enter Frequencies and Power Levels for Mixer under Test
110   !
120   INPUT "Enter the Fixed IF Frequency (MHz)",If_freq
130   INPUT "Enter the LO Start Frequency (MHZ)",Lo_start_freq
140   INPUT "Enter the LO Stop Frequency (MHZ)",Lo_stop_freq
150   INPUT "Enter the Number of Frequency Point to
Measure(3,11,21,26,51)",Pts ! Can be increased
160   IF Pts<>3 AND Pts<>11 AND Pts<>21 AND Pts<>26 AND Pts<>51 THEN GOTO 150
170   INPUT "Is the RF>LO (1) or RF<LO (2) ? (1/2)",Rflo
180   IF Rflo<1 AND Rflo>2 THEN GOTO 170
190   Lo_increment=(Lo_stop_freq-Lo_start_freq)/(Pts-1)
200   INPUT "Enter the RF Power to the Mixer Under Test (dBm) (RF>-30 and RF<0)",Rf_power
210   IF Rf_power<-30 OR Rf_power>0 THEN GOTO 200 ! maintain adequate level for R-Channel
220   INPUT "Enter the LO Power to the Mixer Under Test (dBm)",Lo_power
230   !
240   PRINT "FIXED IF DOWNCONVERTER MEASUREMENTS"
250   PRINT "IF Frequency         = ";If_freq;"   MHz"
260   PRINT "LO Frequency         = ";Lo_start_freq;"   MHz to ";Lo_stop_freq;"   MHz"
270   PRINT "LO Frequency Spacing = ";Lo_increment;"   MHz"
280   PRINT "RF Port Power        = ";Rf_power;"   dBm"
290   PRINT "LO Port Power        = ";Lo_power;"   dBm"
300   PRINT
310   OUTPUT @Ana;"POIN";Pts               ! Set the Number of Points     on the 8753E
320   ! *** Set the 8753E RF Attenuator for the proper range ***
330   IF Rf_power<=0 AND Rf_power>=-15 THEN Range$="00"
340   IF Rf_power<-15 AND Rf_power>=-25 THEN Range$="01"
350   IF Rf_power<-25 THEN Range$="02"
360   OUTPUT @Ana;"PWRR PMAN"              ! Set Test Port Power Range Setting to Manual
```

```
370  Power_range$="POWR"&Range$
380  OUTPUT @Ana;Power_range$              ! Set Test Port Power Range
390  OUTPUT @Ana;"POWE ";Rf_power          ! Set Test Port Power Value
400  OUTPUT @Lo;"POW ";Lo_power            ! Set LO Power on the ESG-D3000
410  ! *** Set the 8753E to measure absolute power at the R channel for the Fixed IF
420  OUTPUT @Ana;"MEASR"     ! Measure and Display the R channel for absolute power measurements
430  OUTPUT @Ana;"CWFREQ ";If_freq;"MHZ"     ! Set the 8753E to CW at the fixed IF Freq.
440  OUTPUT @Ana;"LOFREQ 0HZ"              ! Temporarily set the 8753E for an LO of 0 HZ
450  OUTPUT @Ana;"FREQOFFS ON"             ! Set the 8753E to Freq Offset Mode
460  OUTPUT @Ana;"VIEM ON"                 ! Show the measured data (CW Freq) on the 8753E
470  ! *** Perform a Receiver Calibration on the 8753E at the Fixed IF Frequency ***
480  INPUT "Disconnect the R-CHANNEL jumper from the front panel, Press ENTER",A$
490  INPUT "Connect any IF Components (filter, pad) placed after the mixer to the R-CHANNEL IN, Press
ENTER",A$
500  INPUT "Connect a cable from the TEST PORT 1 to the IF components on the R-CHANNEL IN, Press
ENTER",A$
510  OUTPUT @Ana;"REIC";Rf_power         ! Set the 8753E Power Level Reference for Rcvr Cal
520  OUTPUT @Ana;"TAKRS"                 ! Calibrate the 8753E's Receiver for absolute power
530  ! *** Connect the Mixer to the 8753E and set initial Freq Offset conditions
540  INPUT "Insert the Mixer into the setup and Connect the LO, Press ENTER",A$
550  OUTPUT @Ana;"LOFREQ ";Lo_start_freq;"MHZ"    ! Set LO Freq setting on the 8753E
560  OUTPUT @Lo;"FREQ:CW ";Lo_start_freq;"MHZ"    ! Set the LO Freq on the ESG-D3000A
570  OUTPUT @Ana;"LOPOWER ";Lo_power      ! Set LO Power setting on the 8753E(reference only)
     580  OUTPUT @Lo;"OUTP:STAT ON"                ! Turn ON the LO Power on the ESG-D3000A
590  OUTPUT @Ana;"DCONV"                  ! Set the 8753E to measure a downconverter
600  IF Rflo=1 THEN
610  OUTPUT @Ana;"RFGTLO"                 ! Set the 8753E RF>LO
620  ELSE
630  OUTPUT @Ana;"RFLTLO"                 ! Set the 8753E RF>LO
640  END IF
650  OUTPUT @Ana;"MARK1 0"   ! Turn Marker ON for reading data, can be placed anywhere for CW
meas
660  OUTPUT @Ana;"VIEM OFF"  ! Turn on Freq Offset Block Diagram for Connection Verification
670  INPUT "Examine the 8753E/ESG Screens and Verify the Connections, Frequencies & Power for the
Measurement",A$
680  OUTPUT @Ana;"VIEM ON"   ! Turn on the measurement display
690  PRINT
700  PRINT "LO Freq (MHz)     LOSS (dB)"
710  FOR I=1 TO Pts
720  Lo_freq=Lo_start_freq+(I-1)*Lo_increment
730  OUTPUT @Ana;"LOFREQ ";Lo_freq;"MHZ"    ! Set LO Freq setting on the 8753E
740  OUTPUT @Lo;"FREQ:CW ";Lo_freq;"MHZ"    ! Set LO Freq on the ESG-D3000A
750  WAIT 2           ! Wait to allow 8753E to phase lock, this setting should be optimized
760    OUTPUT @Ana;"OUTPMARK"               ! Command to output marker value
770  ENTER @Ana;Mark1,Mark2,Stim1          ! Enter the marker value
780  Marker(Pts)=Mark1-Rf_power  ! Calculation for conversion loss (dB): Meas-Input levels(dBm)
790  PRINT USING 800;Lo_freq,Marker(Pts)
800  IMAGE 1X,4D.DD,10X,4D.D
810  NEXT I
820  PRINT
830  PRINT "Measurement Complete"
840  END
```

Example Output: Mixer is the HP Avantek TFX-18075L

FIXED IF DOWNCONVERTER MEASUREMENTS
IF Frequency = 170 MHz
LO Frequency = 2400 MHz to 2600 MHz
LO Frequency Spacing = 20 MHz
RF Port Power = -20 dBm
LO Port Power = 10 dBm

LO Freq (MHz)	LOSS (dB)
2400	-8.5
2420	-6.9
2440	-7.6
2460	-8.5
2480	-7.3
2500	-7.2
2520	-8.5
2540	-7.1
2560	-7.5
2580	-8.6
2600	-6.9

Appendix D: Related Application and Product Notes

Understanding the Fundamental Principles of Vector Network Analysis, Hewlett-Packard Application Note 1287-1, 5965-7707E

Exploring the Architectures of Network Analyzers, Hewlett-Packard Application Note 1287-2, 5965-7708E

Applying Error Correction to Network Analyzer Measurements, Hewlett-Packard Application Note 1287-3, 5965-7709E

Network Analyzer Measurements: Filter and Amplifier Examples, Hewlett-Packard Application Note 1287-4, 5965-7710E

In-fixture Microstrip Device Measurements Using TRL Calibration,* Hewlett-Packard Product Note 8720-2, 5091-1943E

Specifying Calibration Standards for the HP 8510 Network Analyzer, Hewlett-Packard Product Note 8510-5A, 5956-4352E

Applying the HP 8510 TRL Calibration for Non-Coaxial Measurements, Hewlett-Packard Product Note 8510-8A, 5091-3645E

Measuring Noninsertable Devices, Hewlett-Packard Product Note 8510-13, 5956-4373E

Improving throughput in Network Analyzer Applications, Hewlett-Packard Application Note 1287-5, 5966-3317E

Using a Network Anlyzer to Characterize High-Power Components, Hewlett-Packard Application Note 1287-6, 5966-3319E

Other Suggested Reading

"Design of an Enhanced Vector Network Analyzer," Frank David et al., Hewlett-Packard Journal, April 1997.

"Calibration for PC Board Fixtures and Probes," Joel Dunsmore, 45th ARFTG Conference Digest, Spring 1995.

"Techniques Optimize Calibration of PCB Fixtures and Probes," Joel Dunsmore, Microwaves & RF, October 1995, pp. 96-108, November 1995, pp. 93-98.

"Improving TRL* Calibrations of Vector Network Analyzers," Don Metzger, Microwave Journal, May 1995, pp. 56-68.

"The Effect of Adapters on Vector Network Analyzer Calibrations," Doug Olney, Microwave Journal, November 1994.

Third-Party Companies

Test Fixtures

Inter-Continental Microwave
1515 Wyatt Drive
Santa Clara, California 95054-1524
USA
E-mail: icmfixture@aol.com
Phone: (408) 727-1596
Fax: (408) 727-0105

Multiport Test Sets

ATN Microwave, Inc.
85 Rangeway Road
No. Billerica, Massachusetts 01862-2105
USA
E-mail: info@atn-microwave.com
Phone: (978) 667-4200
Fax: (978) 667-8548
World Wide Web Home Page: http://www.atn-microwave.com

Wafer Probes and Stations

Cascade Microtech
14255 SW Brigadoon Court
Beaverton, Oregon 97005
USA
E-mail: sales@cmicro.com
Phone: (503) 626-8245
Fax: (503) 626-6023

HEWLETT® PACKARD

For more information about Hewlett-Packard test and measurement products, applications, services, and for a current sales office listing, visit our web site, http://www.hp.com/go/tmdir. You can also contact one of the following centers and ask for a test and measurement sales representative.

United States:
Hewlett-Packard Company
Test and Measurement Call Center
P.O. Box 4026
Englewood, CO 80155-4026
1 800 452 4844

Canada:
Hewlett-Packard Canada Ltd.
5150 Spectrum Way
Mississauga, Ontario
L4W 5G1
(905) 206 4725

Europe:
Hewlett-Packard
European Marketing Centre
P.O. Box 999
1180 AZ Amstelveen
The Netherlands
(31 20) 547 9900

Japan:
Hewlett-Packard Japan Ltd.
Measurement Assistance Center
9-1, Takakura-Cho, Hachioji-Shi,
Tokyo 192, Japan
Tel: (81) 426 56 7832
Fax: (81) 426 56 7840

Latin America:
Hewlett-Packard
Latin American Region Headquarters
5200 Blue Lagoon Drive, 9th Floor
Miami, Florida 33126, U.S.A.
Tel: (305) 267-4245
(305) 267-4220
Fax: (305) 267-4288

Australia/New Zealand:
Hewlett-Packard Australia Ltd.
31-41 Joseph Street
Blackburn, Victoria 3130, Australia
1 800 629 485

Asia Pacific:
Hewlett-Packard Asia Pacific Ltd.
17-21/F Shell Tower, Times Square,
1 Matheson Street, Causeway Bay,
Hong Kong
Tel: (852) 2599 7777
Fax: (852) 2506 9285

Data Subject to Change
Copyright © 1998
Hewlett-Packard Company

Printed in U.S.A. 3/98
5966-3318E