GRUNDIG

SERVICE SHEET

PRIMA BOY
LUXUS
LW 208

TRANSISTOR PORTABLE 1968

ALIGNMENT DETAILS

CHASSIS – REMOVAL

1. Loosen two screws on rear panel.
2. Remove rear panel with chassis
3. Unsolder loudspeaker, telescopic aerial and battery connections and remove earphone socket.
4. Tilt mains and car aerial socket.
5. Loosen screws shown as shaded squares.
6. Remove chassis carefully.

Quiescent Current of Output transistors

Battery voltage 5V.

Remove link, connect milliameter between collector AC 187K and chassis. Adjust Quiescent current with R42 (2 KΩ) to 3.5mA. After alignment reconnect link.

Adjustment of IF–Amplifier

Adjust collector current of AF126I with R21 (IMΩ) to obtain a voltage of 1.1V at emitter resistor R16.

FM – IF ALIGNMENT 10.7 MHz

ALIGNMENT SEQUENCE	COUPLING OF WOBBULATOR OUTPUT	CONNECTION OF VISUAL INDICATOR	ADJUSTMENT
IF III	Pin 12 IF II	Loose capacity coupling via crocodile clip and diode to IF III Pin 1. 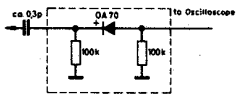	(b) Fully detuned (a) Max and symmetrical
IF II	Pin 7 IF I		(c) and (d) Max and Symmetrical
IF I	Direct coupled to Base of 1st IF stage. (AM-Mixer)		(e) and (f) Max and Symmetrical
Mixer Alignment	loosely coupled to point X. (Mixer)		(g) and (h) Max and Symmetrical
Ratio transf. secondary	Pin 12 IF II	Via 50 KΩ cable to contact b 8. (AF output)	(b) Max linearity at ±75 kHz deviation.
AM Rejection			Adjust R3 (IF III) for max AM rejection with 30mV on base of AF 126 II
	loosely coupled to point X (mixer) but without AM–Modulation		If necessary tune again with a lower level to symmetry.

AM – IF ALIGNMENT 460 KHz

ALIGNMENT SEQUENCE	COUPLING OF WOBBULATOR OUTPUT	CONNECTION OF VISUAL INDICATOR	ADJUSTMENT
IF III	Pin 12 IF II	Test prod, loose to collector AF 126 II. IF III Pin 1	(i) Max and Symmetrical
IF II	Pin 7 IF I		(ii) and (iii) Max and Symmetrical
IF I	Hot end of MW. – aerial circuit.		(iv) and (v) Max and Symmetrical

AM – OSCILLATOR AND AERIAL ALIGNMENT

RANGE FREQUENCY & POINTER SETTING		OSC.	AERIAL	SENSITIVITY	OSC. VOLTAGE	REMARKS
MW	560 kHz	(1) Max	(3) Max	15μV	120–160mV	For MW & LW adjustment a feed signal via a loop fed to the ferrite aerial.
	1450 kHz	(2) Max	(4) Max	10μV		
LW	160 kHz	(5) Max	(6) Max	24μV	90–140mV	
	240 kHz		(7) Max	13μV		

FM – OSCILLATOR – AND RF ALIGNMENT

RANGE FREQUENCY & POINTER SETTING	OSC.	COUPLING CIRCUIT	OSC. VOLTAGE AT AF 125	REMARKS
88 MHz	(A) Max	(C) Max	90....80mV	Connect Generator direct into the mixer and adjust the Oscillator voltage with R313 to max 90mV
102 MHz	(B) Max	(D) Max		

SUBJECT TO ALTERATION

T3C568CPP

www.service-data.com

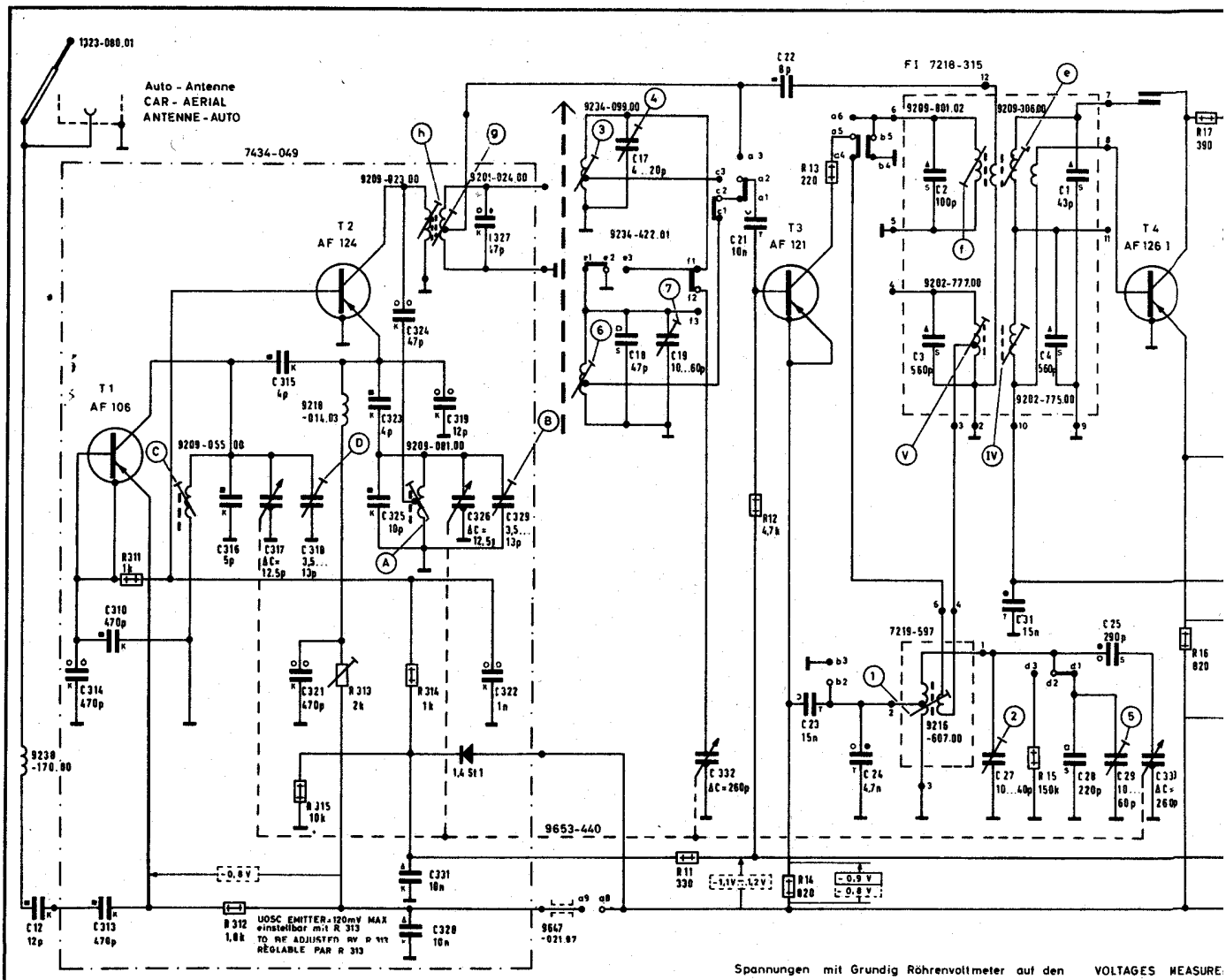

FM PO GO MARCHE / ARRET
FM MW LW ON/OFF

UKW	MW	LW	Ein/Aus

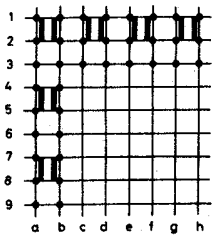

gez. Stellung: Tasten in Ruhestellung
PRESS BUTTONS IN NEUTRAL POSITION
POUISSOIRS INOPERES

Wellenbereiche :
FREQENCY RANGES:
GAMMES D'ONDES:

LW, GO	145	260	kHz / kc
MW, PO	510	1620	kHz / kc
UKW, FM	87	104	MHz / Mc

Oszillatorspulensatz
OSCILLATOR COIL SET
BLOC BOBINAGE OSCILLATEUR
} 7219-597

UKW - Spulensatz
F M - COIL SET
F M - BLOC BOBINAGE
} 7434-049

Spannungen mit Grundig Röhrenvoltmeter auf den Meßbereichen 10/3/1V bei 5V= Batteriespannung gemessen. Spannungs- und Stromwerte gültig bei eingedrehtem Drehko ohne Signal

MW | UKW

VOLTAGES MEASURE
VTVM AT 5V= MEASUR
WITHOUT SIGNAL
TURNED IN

M W

Änderungen vorbehalten

ALTERATIONS

Ferritstabantenne
FERRITE ROD
BATONNET - FERRITE
} 7701-356

AM
FM

AF 106



AF 124
AF 121
AF 126



FI C 2, 3, 1, 4,

C: 12, 314, 313, 310, 316, 317, 315, 318, 321, 323, 325, 324, 331, 328, 319, 326, 322, 327, 329, 17, 18, 19, 332, 21, 22, 23, 24, 27, 31, 28, 25, 29, 339,
R: 311, 312, 315, 313, 314, 11, 12, 14, 13, 15, 16, 17

VHF TUNER UNIT

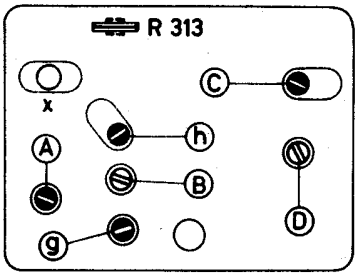

DRIVE ASSY

CORD 27ins (685mm) approx

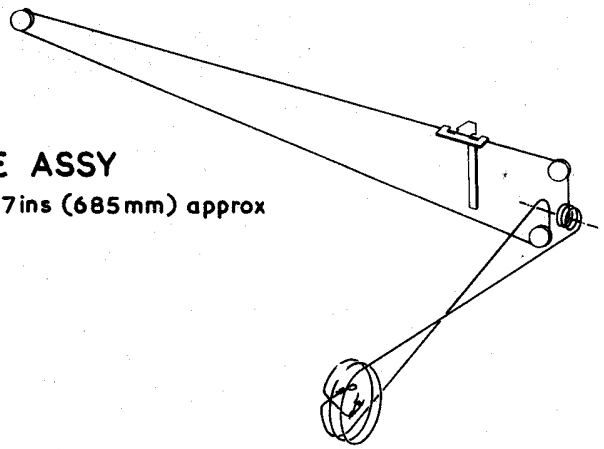

www.service-data.com

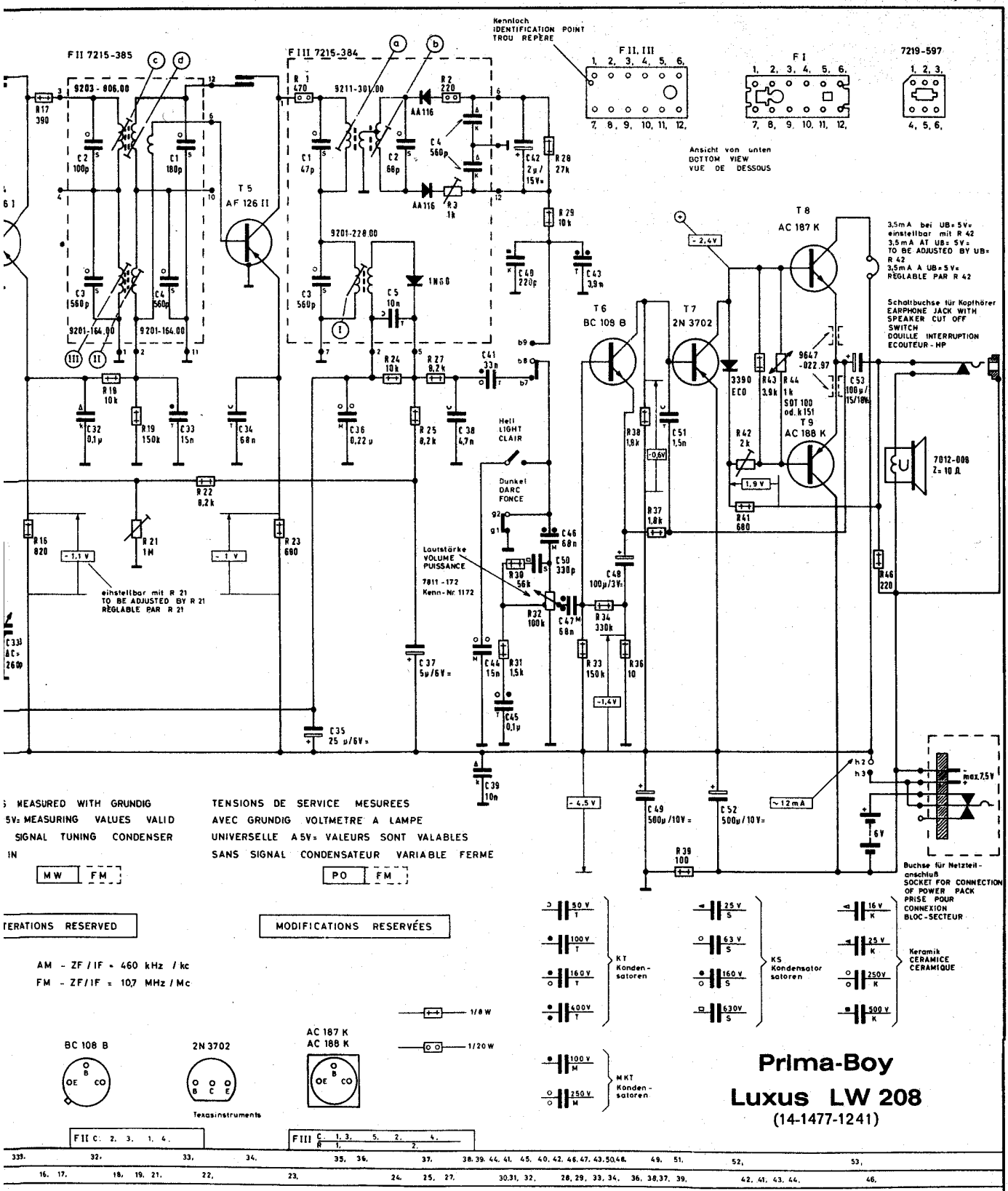

MEASURED WITH GRUNDIG 5V= MEASURING VALUES VALID SIGNAL TUNING CONDENSER IN

MW | FM

TENSIONS DE SERVICE MESUREES AVEC GRUNDIG VOLTMETRE A LAMPE UNIVERSELLE A 5V= VALEURS SONT VALABLES SANS SIGNAL CONDENSATEUR VARIABLE FERME

PO | FM

TERATIONS RESERVED

MODIFICATIONS RESERVÉES

AM - ZF / IF = 460 kHz / kc
FM - ZF/IF = 10,7 MHz / Mc

BC 108 B

2N 3702

Texasinstruments

AC 187 K
AC 188 K

F II C: 2. 3. 1. 4.

F III C: 1, 3. 5. 2. 4.
R: 1. 2.

339. 32. 33. 34. 35. 36. 37. 38. 39. 44. 41. 45. 40. 42. 46. 47. 43. 50. 48. 49. 51. 52. 53.
16. 17. 18. 19. 21. 22. 23. 24. 25. 27. 30. 31. 32. 28. 29. 33. 34. 36. 38. 37. 39. 42. 41. 43. 44. 46.

Prima-Boy
Luxus LW 208
(14-1477-1241)

Technische Daten

(Betriebsspannung, wenn nicht anders angegeben, 6 V)

Stromverbrauch bei 5 V, ohne Signal:	AM: 12 mA FM: 13 mA
Max. Ausgangsleistung:	400 mW
ZF-Bandbreite:	5,5 kHz
ZF-Trennschärfe:	1 : 100
NF-Empfindlichkeit (50 mW bei 800 Hz) gemessen:	
an der Basis von AC 187 K	850 mV
am Kollektor von BC 108 B	8,5 mV
am heißen Ende des L-Reglers:	5,5 mV
AM-ZF-Empfindlichkeit am heißen Ende des MW-Vorkreises:	10 µV
Mischempfindlichkeit (am heißen Ende des Vorkreises):	
MW 560 kHz	15 µV
1000 kHz	11 µV
1450 kHz	10 µV
LW 160 kHz	24 µV
240 kHz	16 µV
Oszillatorspannung am Emitter-Mischer:	MW 120 — 160 mV LW 90 — 140 mV
FM-ZF-Empfindlichkeiten (bei 40 kHz Hub):	
10,7 MHz am F I Stift 7	1 mV
10,7 MHz am F II Stift 12	15 mV
10,7 MHz des 1. ZF-Basiskreises	40 µV
UKW-Empfindlichkeiten (am Eingang, an 60 Ω):	
88 MHz	0,45 µV Spiegel 1 : 13
96 MHz	0,4 µV Spiegel 1 : 11
102 MHz	0,4 µV Spiegel 1 : 12
Rauschzahl (an 60 Ω):	3,5 . . . 5 kTo
Oszillatorengrundwelle am Eingang:	1,5 . . . 2,5 mV

Alle Oszillatoren müssen bei U_B = 3 V noch einwandfrei schwingen.

www.service-data.com

PRINTED CIRCUIT (SOLDER SIDE)

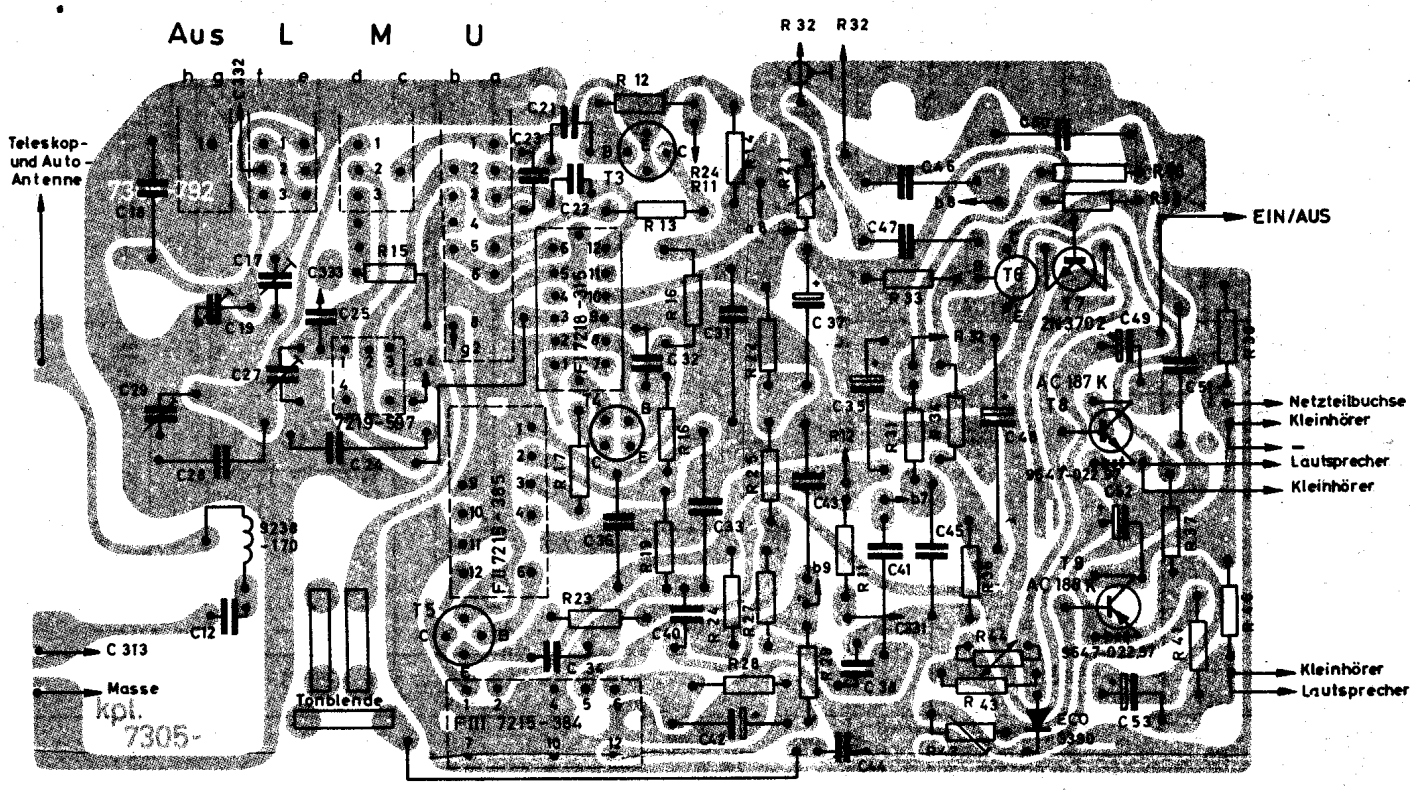

ALIGNMENT POINTS

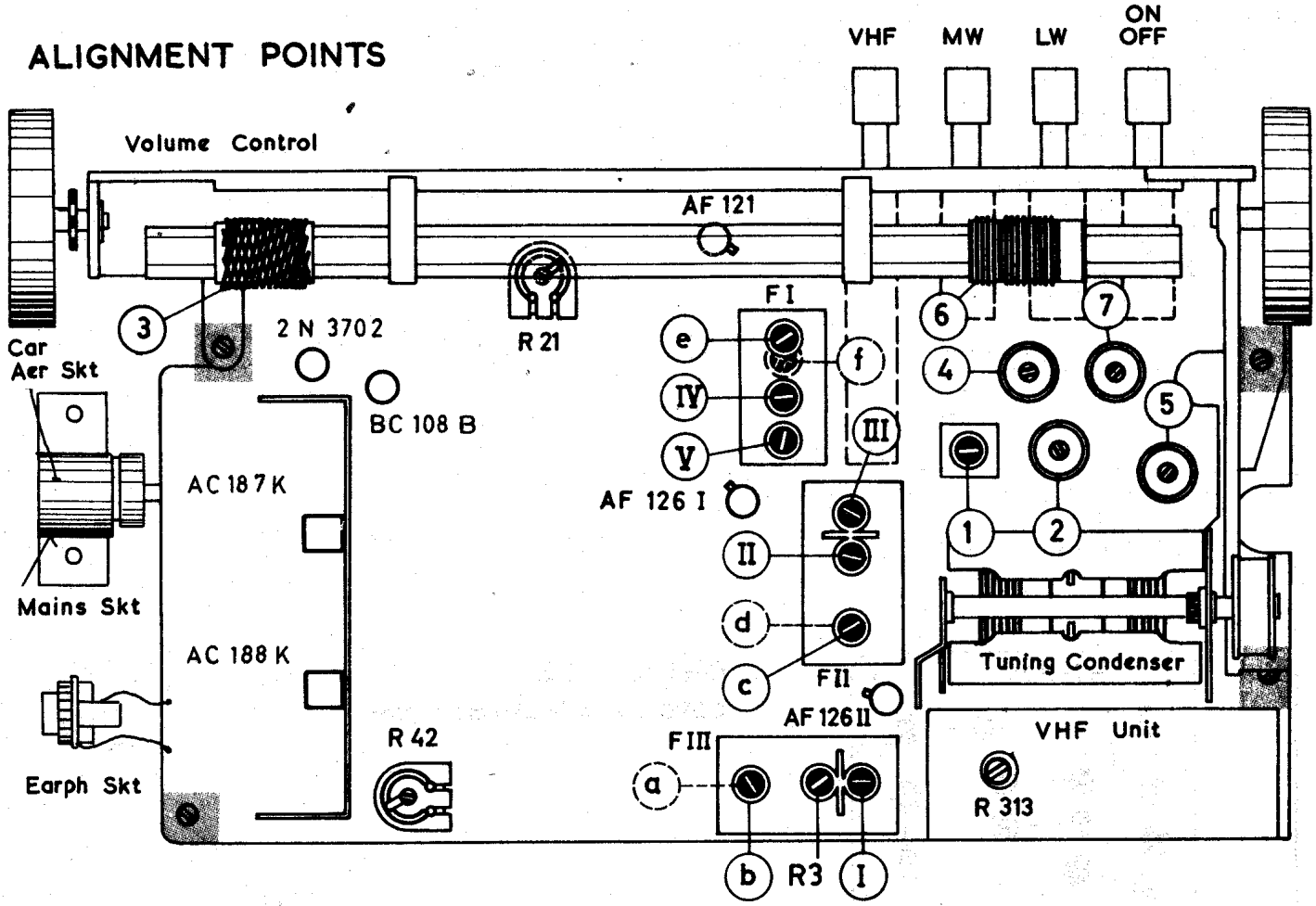

www.service-data.com