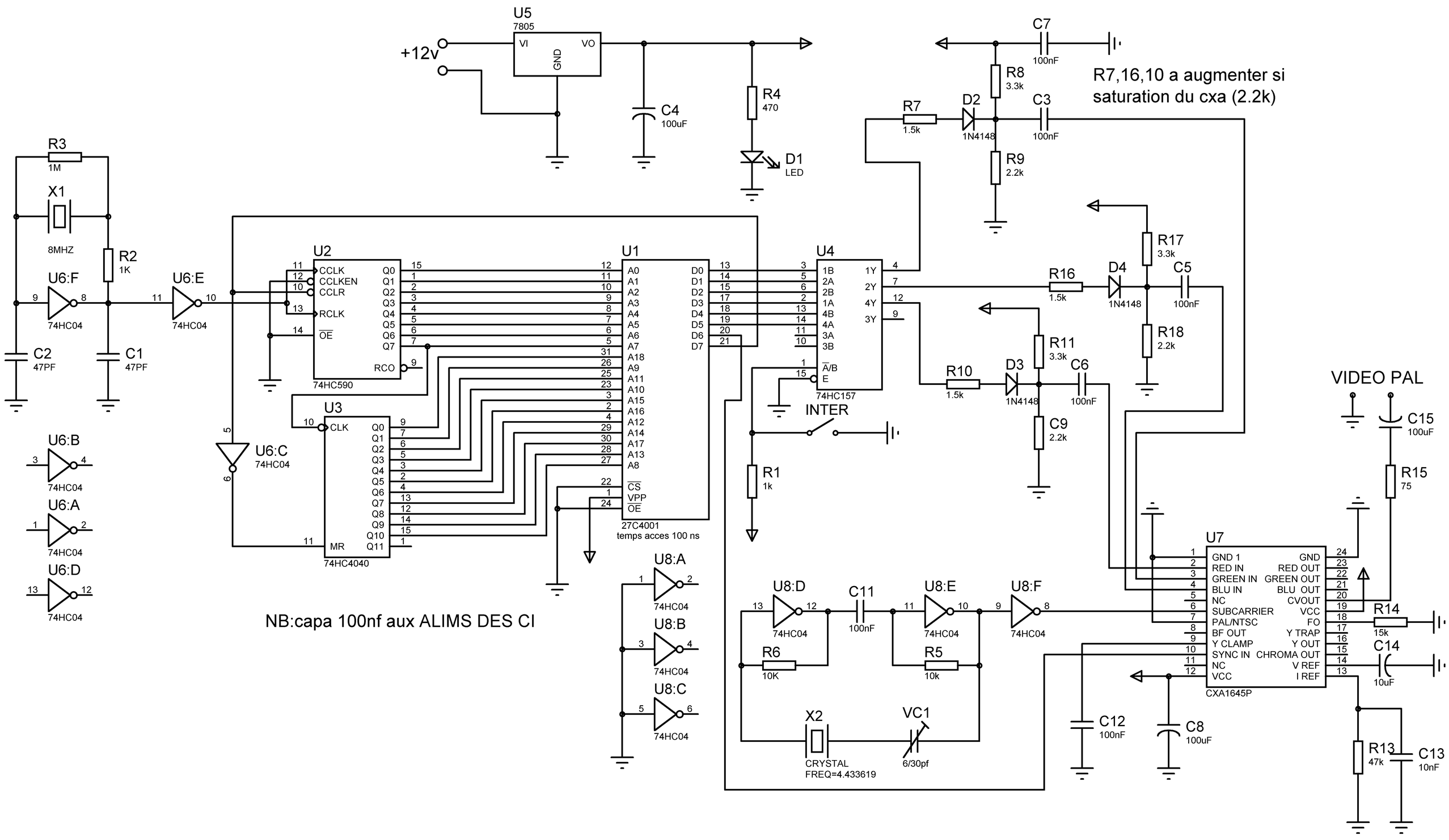
U5
7805
VI
VO
GND
+12v
C4
100uF
R4
470
D1
LED
C7
100nF
R8
3.3k
R7,16,10 a augmenter si
saturation du cxa (2.2k)
R7
1.5k
D2
1N4148
C3
100nF
R9
2.2k
R3
1M
X1
8MHZ
R2
1K
U6:F
74HC04
U6:E
74HC04
C2
47PF
C1
47PF
U2
CCLK
CCLKEN
CCLR
RCLK
OE
Q0
Q1
Q2
Q3
Q4
Q5
Q6
Q7
RCO
74HC590
U1
A0
A1
A2
A3
A4
A5
A6
A7
A18
A9
A11
A10
A15
A16
A12
A14
A17
A13
A8
CS
VPP
OE
D0
D1
D2
D3
D4
D5
D6
D7
27C4001
temps acces 100 ns
U4
1B
2A
2B
1A
4B
4A
3A
3B
A/B
E
1Y
2Y
4Y
3Y
74HC157
R17
3.3k
R16
1.5k
D4
1N4148
C5
100nF
R18
2.2k
R11
3.3k
R10
1.5k
D3
1N4148
C6
100nF
C9
2.2k
INTER
R1
1k
VIDEO PAL
C15
100uF
R15
75
U3
CLK
MR
74HC4040
U6:C
74HC04
U6:B
74HC04
U6:A
74HC04
U6:D
74HC04
U8:A
74HC04
U8:B
74HC04
U8:C
74HC04
U8:D
74HC04
C11
100nF
U8:E
74HC04
U8:F
74HC04
R6
10K
R5
10k
X2
CRYSTAL
FREQ=4.433619
VC1
6/30pf
U7
GND 1
RED IN
GREEN IN
BLU IN
NC
SUBCARRIER
PAL/NTSC
BF OUT
Y CLAMP
SYNC IN
NC
VCC
GND
RED OUT
GREEN OUT
BLU OUT
CVOUT
VCC
FO
Y TRAP
Y OUT
CHROMA OUT
V REF
I REF
CXA1645P
R14
15k
C14
10uF
C12
100nF
C8
100uF
R13
47k
C13
10nF
NB:capa 100nf aux ALIMS DES CI