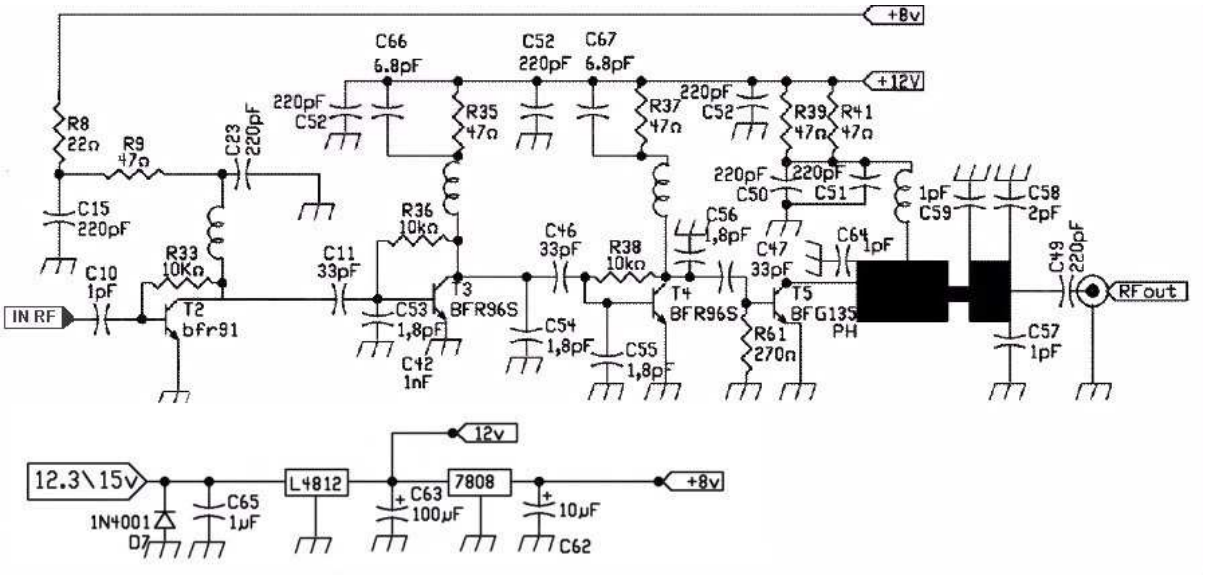
+8v
+12V
C66
6.8pF
C52
220pF
C67
6.8pF
220pF
C52
R35
47Ω
R37
47Ω
220pF
C52
R39
47Ω
R41
47Ω
R8
22Ω
R9
47Ω
C23
220pF
C15
220pF
220pF
C50
220pF
C51
1pF
C59
C58
2pF
R36
10kΩ
C56
1,8pF
C46
33pF
R38
10kΩ
C47
33pF
C64
1pF
C49
220pF
R33
10KΩ
C11
33pF
C10
1pF
IN RF
T2
bfr91
C53
1,8pF
T3
BFR96S
C42
1nF
C54
1,8pF
C55
1,8pF
T4
BFR96S
R61
270Ω
T5
BFG135
PH
C57
1pF
RFout
12v
12.3\15v
L4812
7808
+8v
1N4001
D7
C65
1µF
C63
100µF
10µF
C62